Mk.7
M.M./E.G.A. Technical Manual

THE QUEEN'S AWARDS
FOR ENTERPRISE:
INNOVATION
2007

Issued by:

AUTOFLAME ENGINEERING LIMITED

Unit 1 - 2, Concorde Business Centre
Airport Industrial Estate, Wireless Road
Biggin Hill, Kent, TN16 3YN

Tel: +44 (0)845 872 2000
Fax: +44 (0)845 872 2010
Email: salesinfo@autoflame.com
Website: http://www.autoflame.com/

Registered Holder:	
Company:	
Department:	

This manual and all the information contained herein is copyright of Autoflame Engineering Limited. It may not be copied in the whole or part without the consent of the Managing Director.

Autoflame Engineering's policy is one of continuous improvement in both design and manufacture. We therefore reserve the right to amend specifications and/or data without prior notice. All details contained in this manual are correct at the time of going to press.

INDEX

	Overview and Introduction to the Features and Benefits of the M.M./E.G.A. System.	1
M.M.	Micro Modulation Fuel Air Ratio Control, Flame Safeguard Control & P.I.D. Load Controller.	2
E.G.A.	Exhaust Gas Analysis Trim System CO_2 + CO + O_2 + Flue Temp. + Eff. Monitoring NO & SO_2.	3
I.B.S.	Intelligent Boiler Sequencing Lead Lag Selection.	4
W.L.	Water Level Control, First Out Annunciation, Bottom Blowdown and TDS Management	5
D.T.I.	Data Transfer Interface Remote Control, Monitoring and Data Acquisition for the total system.	6
	Application Possibilities for the M.M. E.G.A. System.	7
	Ancillary & Peripheral Equipment for the M.M. E.G.A. System, Oil & Gas Valves, Positioning Motors, Load Detectors.	8
	Miscellaneous Component Information: Parts List.	9
	Appendix: Approvals, Compatibility, Warranty, Terms and Conditions etc.	10

Important Notes

A knowledge of combustion related procedures and commissioning is essential before embarking work on any of the M.M./E.G.A. systems. This is for safety reasons and effective use of the M.M./ E.G.A. system. Hands on training is required. For details on schedules and fees relating to group training courses and individual instruction, please contact the Autoflame Engineering Ltd. offices at the address listed on the front.

Short Form - General Terms and Conditions

A full statement of our business terms and conditions are printed on the reverse of all invoices. A copy of these can be issued upon application, if requested in writing.

The System equipment and control concepts referred to in this Manual MUST be installed, commissioned and applied by personnel skilled in the various technical disciplines that are inherent to the Autoflame product range, i.e. combustion, electrical and control.

The sale of Autoflame's systems and equipment referred to in this Manual assume that the dealer, purchaser and installer has the necessary skills at his disposal. i.e. A high degree of combustion engineering experience, and a thorough understanding of the local electrical codes of practice concerning boilers, burners and their ancillary systems and equipment.

Autoflame's warranty from point of sale is two years on all electronic systems and components.
One year on all mechanical systems, components and sensors.

The warranty assumes that all equipment supplied will be used for the purpose that it was intended and in strict compliance with our technical recommendations. Autoflame's warranty and guarantee is limited strictly to product build quality, and design. Excluded absolutely are any claims arising from misapplication, incorrect installation and/or incorrect commissioning.

SECTION 1: OVERVIEW AND INTRODUCTION OF THE AUTOFLAME SYSTEM

1.1 OVERVIEW – FEATURES AND BENEFITS OF THE AUTOFLAME SYSTEM

1.1.1 System Possibilities

1.1.2 Layout of Dual Fuel Rotary Cup Burner Controls and MM System

1.1.3 MM Systems Comparison

1.2 MICRO MODULATION (MM)

1.2.1 MM System Example

1.3 EXHAUST GAS ANALYSIS (EGA) 3 PARAMETER TRIM SYSTEM

1.4 INTELLIGENT BOILER SEQUENCING (IBS)

1.4.1 Heating Boiler IBS

1.4.2 Steam Boiler Sequential Control

1.5 REMOTE MONITORING AND CONTROL (DTI)

1.6 O2 INTERFACE MODULE

1.7 PC COMPATIBILITY

1.8 ANALOGUE INPUT/OUTPUT MODULE

1.1 OVERVIEW – FEATURES AND BENEFITS OF THE AUTOFLAME SYSTEM

MM Micro Modulation/Flame Safeguard

- Fuel/Air ratio control
- Control up to 4 positioning motors and 2 variable speed drives (VSD/VFD)
- 4 Independent fuel programmes
- Fully adjustable PID load control for temperature and pressure
- External voltage/current load control and setpoint adjustment
- Various boiler load detectors available
- Twin burner capability
- Fully compatible with control frequency drives
- Fuel flow metering capability
- Internal flame safeguard – full flame supervision with UV and IR self check
- Gas valve train leak supervision and gas pressure monitoring
- Air pressure proving and monitoring

EGA Exhaust Gas Analysis

- 3 Parameter Trim of O2, CO2 and CO
- Analysis of O2, CO2, CO, NO, Exhaust Gas Temperature, Efficiency and Delta T
- Optional analysis of NO2 and SO2
- Local display for re-calibration, changing cells, user configuration and stand-alone operation
- Upper/lower/absolute limits for O2, CO2, CO, NO and exhaust temperature
- Six 4-20mA output signals to interface with other controls/chart recorders

IBS Intelligent Boiler Sequencing (Lead/Lag Control)

- System will sequence hot water boilers and steam boilers via lead/lag load distribution
- Fully adjustable via user options within the system to enable the control to be tailored to the application
- System control for isolation of valves or pumps
- Phantom setpoint and standby warming for lag boilers via a timing sequence and pressure offset or aquastat

DTI Data Transfer Interface

- System will collect operational data for up to 10 MM modules, 10 EGA modules, 10 Analogue I/O modules and 10 Digital I/O modules on one site. Information transmitted via RS232/485 data link to a local PC running WinPC DTI or Building Management System (BMS)
- Modem compatibility software to give information and control of boiler house operation remotely
- MODBUS and Johnson's Metasys compatible

WL Water Level Control

- Fully modulating water level control including all safeties, 2nd low, 1st low, 1st low pre alarm, high water pre alarm and high water
- 15 First Out Annunciation inputs
- Automatic bottom blowdown
- Surface blowdown management (TDS – total dissolved solids)
- Steam flow metering

IIF O2 Interface Module

- Interface with existing on-line O2 analysers via 4-20mA

PCC PC Compatible

- Download all commissioning data from MM module
- Upload commissioning data to MM module

I/O Digital & Analogue Input / Output Modules

- These modules can be configured to give inputs and outputs for the DTI system
- Analogue modules have six 4 – 20mA inputs and outputs
- All inputs/outputs can be labelled for the specific application and set for alarm or monitor only status

1.1.1 System Possibilities

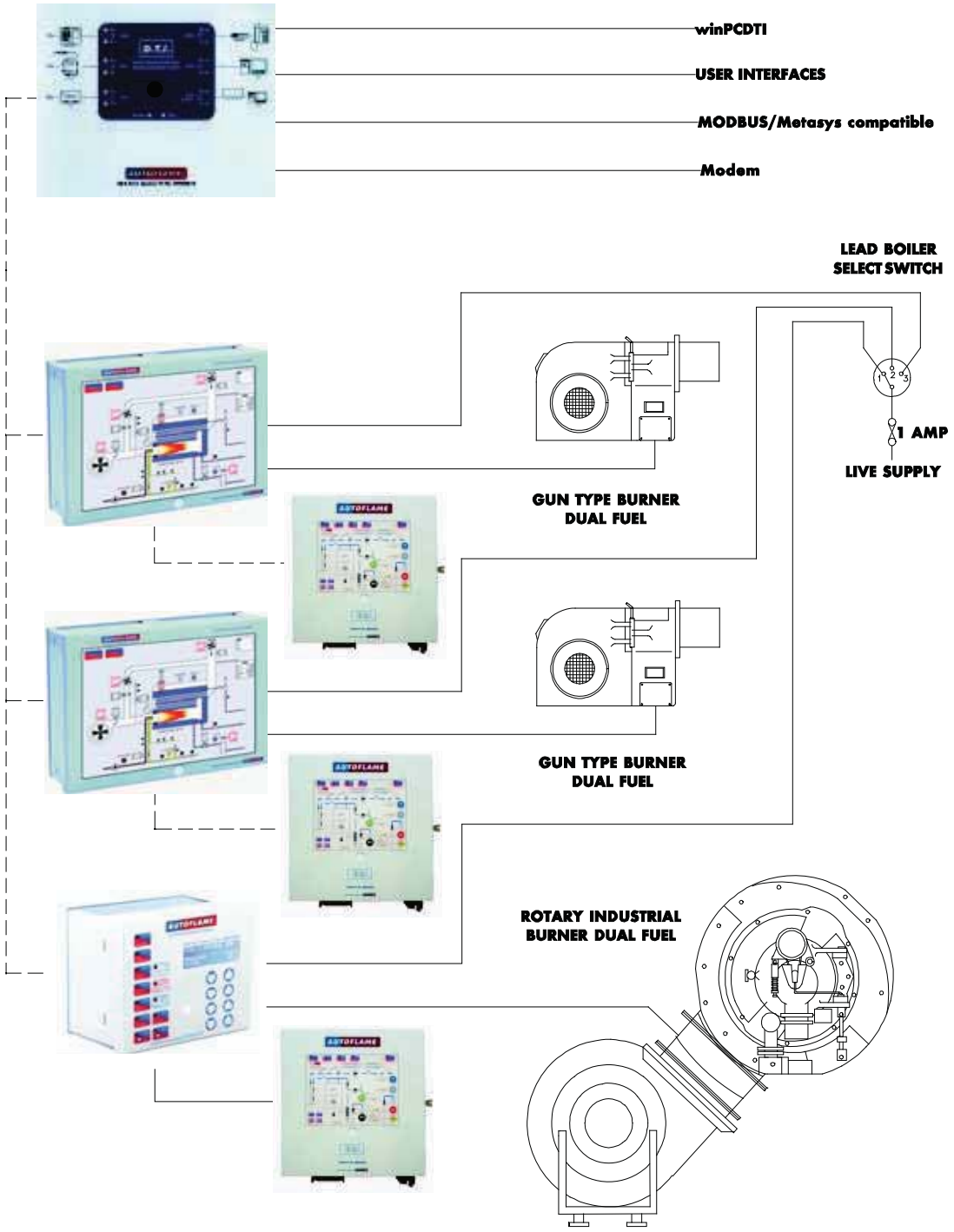

1.1.2 Layout of Dual Fuel Rotary Cup Burner Controls and MM System

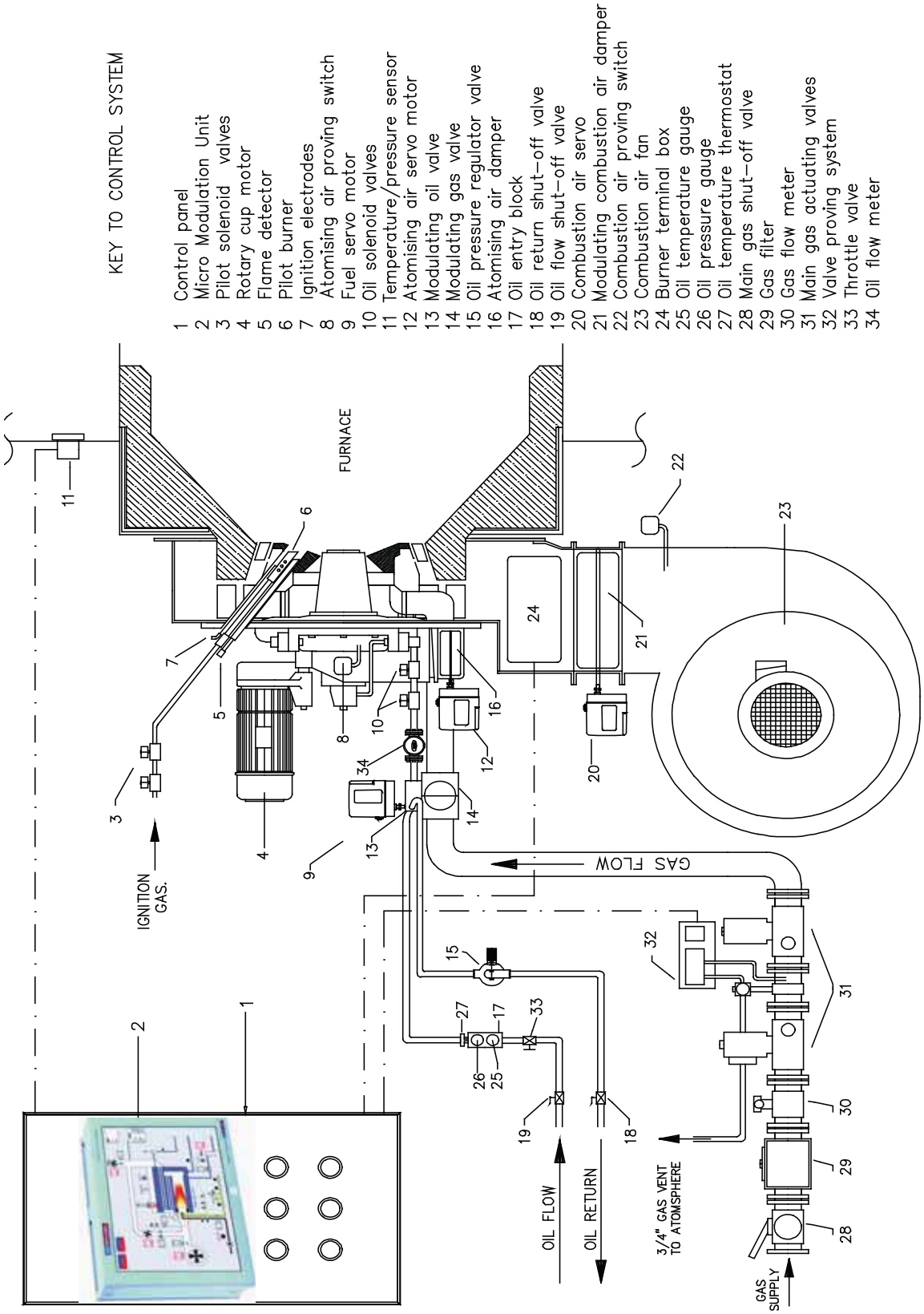

1.1.3 MM Systems Comparison

Manufactured by:	**Autoflame**	**Autoflame**
Place of origin	**UK**	**UK**
Standard Hardware features:	**Mk 7 EVO**	**Mini Mk 7**
Integrated flame safeguard and combustion management	YES	YES
Dedicated VSD Channels	2	1
Display type	10.4" Colour Touch Screen	20 x 4 line LCD
Number of independent fuel profile configurations	4	2
110VAC or 230VAC versions	YES (Automatic Switching)	YES
Hardware enclosure specification	Powder coat welded steel	Powder coat welded steel
Hardware enclosure rating	NEMA 4- IP65	NEMA 4- IP65
Separate display for remote mounting	NO	NO
Number of functions on keypad	Touch Screen	20
Display Information:		
Lockout history (time & dated)	YES	YES
Hours run and number of start-up cycles	YES	YES
Error diagnostics with full message text display	YES	YES
7 day time clock function	YES	YES
Profile programming sequence	High to Low	High to Low
Servo motor information:		
Number of servo channels used at any one time	4 + 2 VFD's	3 + 1 VFD
Servo motor control voltage	230 & 24 Volt	230 & 24 Volt
Maximum torque for standard servo motors	11 ft.lbf- 15Nm	11 ft.lbf- 15Nm
Industrial servo motor control voltage	230 & 120 Volt	230 & 120 Volt
Maximum torque for industrial servo motors	295 ft.lbf- 400Nm	295 ft.lbf- 400Nm
Motor travel speed adjustable	YES	YES
Servo enclosure material	Steel	Steel
Sensor options and features:		
Burner air pressure sensors	YES	NO
Burner gas pressure sensors	YES	NO
Gas valve leak testing system	YES	NO
Gas pressure monitoring and display	YES	NO
Gas high and gas low limit supervision	YES	NO
Maximum gas pressure sensor PSI	60.0	N/A
Burner oil pressure sensors: high/low proving	YES	NO
Boiler Load Control:		
Boiler steam pressure sensors	YES	YES
Boiler temperature sensors	YES	YES
External load sensor control	YES	YES
Two selectable internal PID response loops	YES	NO
Adjust ratio single point change	YES	YES
Sequence indication on controller	YES	YES
Infra-red Upload/Download of commissioning data	YES	YES
Exernal modulation control from DCS or PLC	YES (4-20mA/0-10V)	YES (0-10V)
Parallel PID and external tracking input operation	YES	YES
Night setpoint setback	YES	YES

Twin setpoint user selectable	YES	NO
Exhaust Gas Analysis:		
Number of parameters for combustion Trim	3	3
O2 sensor	Electro Chem	Electro Chem
C02 sensor	Thermal Cond	Thermal Cond
CO sensor	Electro Chem	Electro Chem
NO sensor	Electro Chem	Electro Chem
NO2 sensor	Electro Chem	Electro Chem
SO2 sensor	Electro Chem	Electro Chem
Combustion Efficiency display	YES	YES
Exhaust gas temperature displayed and limit	YES	YES
User definable combustion limits	YES	YES
User definable combustion parameters	YES	YES
Local display as standard	YES	YES
Programming features:		
levels of password protection	Multi	2
User configurable options & parameters	YES	YES
Full description of options and parameters	YES	YES
Online changes of options and parameters	YES	NO
Local setpoint protection	YES	YES
System commissioned from front keypad	YES	YES
Separate programming tool required for commissioning	NO	NO
Servomotor commissioning non-monotonic	YES	YES
Online adjustment facility	YES	YES
User selectable channel labels	YES	NO
Independent light off position: choke position	YES	YES
Independent FGR light off/hold position	YES	YES
Hand/Auto/Low flame hold	YES	YES
Interface Profibus/Modbus/Metasys	Modbus/Metasys	Modbus/Metasys
Full self diagnostics on all system components	YES	YES
Analogue input/output functions– 4 to 20mA	YES	YES
Outside temperature compensation	YES	YES
Cold boiler warming sequence	YES	YES
Fuel flow metering	YES	YES
UV supervision	YES	YES
Flame supervision type Continuous operation	UV/flame switch/IR Scanner UV self-check/IR Self Check	UV/Ionisation Rod/IR Scanner UV self-check/IR Self Check
Windows based monitoring software	YES	YES
CEMS software option	YES	YES
Standard lead/lag controller: hot water & steam	YES	YES
Water Level Controls and Expansion PCB:		
Fully modulating valve water level control	YES	NO
Pump on/off water level control	YES	NO
Capacitance probes to measure water level	YES	NO
15 First Out Annunciation Inputs	YES	NO
Total Dissolved Solids (TDS) Management	YES	NO
Steam/Heat Flow metering	YES	NO
Bottom/Column Blowdown	YES	NO
Shunt Switch Philosophy	YES	NO

1.2 MICRO MODULATION (MM)

To ensure maximum efficiency in the operation of any boiler, two requirements are of paramount importance, the first being that the air to fuel ratio is kept to the minimum to ensure complete combustion within the limitations of the combustion head design and that these settings once arrived at are infinitely repeatable to an incredibly high degree of accuracy. The second requirement should be that the target temperature or pressure of the boiler is monitored by the combustion system and that at all times exactly the right amount of fuel and air is fired to achieve the target value and that at no time, irrespective of load change, is this target exceeded or fallen short off.

The inherent hysteresis of all mechanical systems that have traditionally involved cams and linkages to characterise the fuel air ratio have made this sort of accuracy impossible. The accuracy of response of the fuel input to the monitored temperature/pressure of the boiler has meant that the target value set by the operator has at most times been exceeded or fallen short of.

The Micro Modulation system provides an easily programmable and flexible means of optimising combustion quality throughout the load requirement range of the boiler/burner unit whilst ensuring the temperature is accurate to within 1°C (2°F) and pressure to within 1.5PSI (0.1Bar). The maximum error in angular degrees of rotation between the two servomotors at any position in the load range is 0.1°.

At the heart of the system is the control module which contains the microprocessor and power supply. The display in a Mk7 MM is a 10.4" touch screen which displays data on the positions, firing rate, actual, required temperature/pressure and exhaust gases if optioned with an EGA. The Mini Mk7 MM features an LCD display with a touch sensitive keypad and status indicators. The LCD screen displays all required information such as firing rate, servomotors positions, required temperature/pressure and actual temperature/pressure.

Interface with the control modules, by means of high speed solid state switching, are up to 4 dual wound servo motors. One motor is responsible for positioning the air damper, another for the fuel valve and the other two can be used as required e.g. Flue Gas Recirculation valves.

This new system of burner control achieves 'Locked On' near stoichiometric air fuel mixing throughout the fuel input range of the boiler while maintaining exact temperature or pressure target values. The load control incorporates user variable PID control. The PID controller is infinitely adjustable to match any boiler room requirements.

The MM module is the basic building block of the Autoflame System. A complete system based on the Mk7 MM incorporates all of the following control facilities and features:

- 6 channels: 4 positioning motors and 2 variable speed drive interfaces
- 4 separate fuel profiles
- Full flame supervision control with UV and IR self checking scanners
- A lockout history of the last 16 incidents held in memory with time and date
- Single point change function
- IBS steam sequencing with lead/lag and standby warming
- IBS heating boiler sequencing with lead/lag and control of return line 2 port valve
- Gas valve train leak proving system
- Gas pressure monitoring and display
- High and low gas pressure supervision
- Oil pressure high/low limits supervision
- User definable optimum ignition position select – Golden Start
- User definable flue gas recirculation ignition position selection
- Variable servomotor travel speed
- Selectable trim channel
- Burner control selectable operation – first/second safety times
- Air pressure proving – display and supervision
- Internal PID 3 term load control
- Outside temperature compensation of boiler setpoint
- Fuel flow metering – instantaneous and totalised
- Exhaust temperature readings
- 3 Parameter trim – O2, CO2 and CO.
- Combustion efficiency calculation
- NO, NO2 and SO2 monitoring and display
- User definable combustion limits
- Second setpoint – user selectable
- Hand/Low flame hold facilities
- Password protection of all safety related options and parameters
- Infra red coms port for upload and download of commissioning data
- Twin burner control capability
- 4-20mA/0-10V input for external modulation
- 4-20mA/0-10V output confirming firing rate
- Changeover of fuels without shutdown (Special Software)
- 10.4" touch screen
- 110 or 230V standard operation
- Panel facing mounting

1.2.1 MM System Example

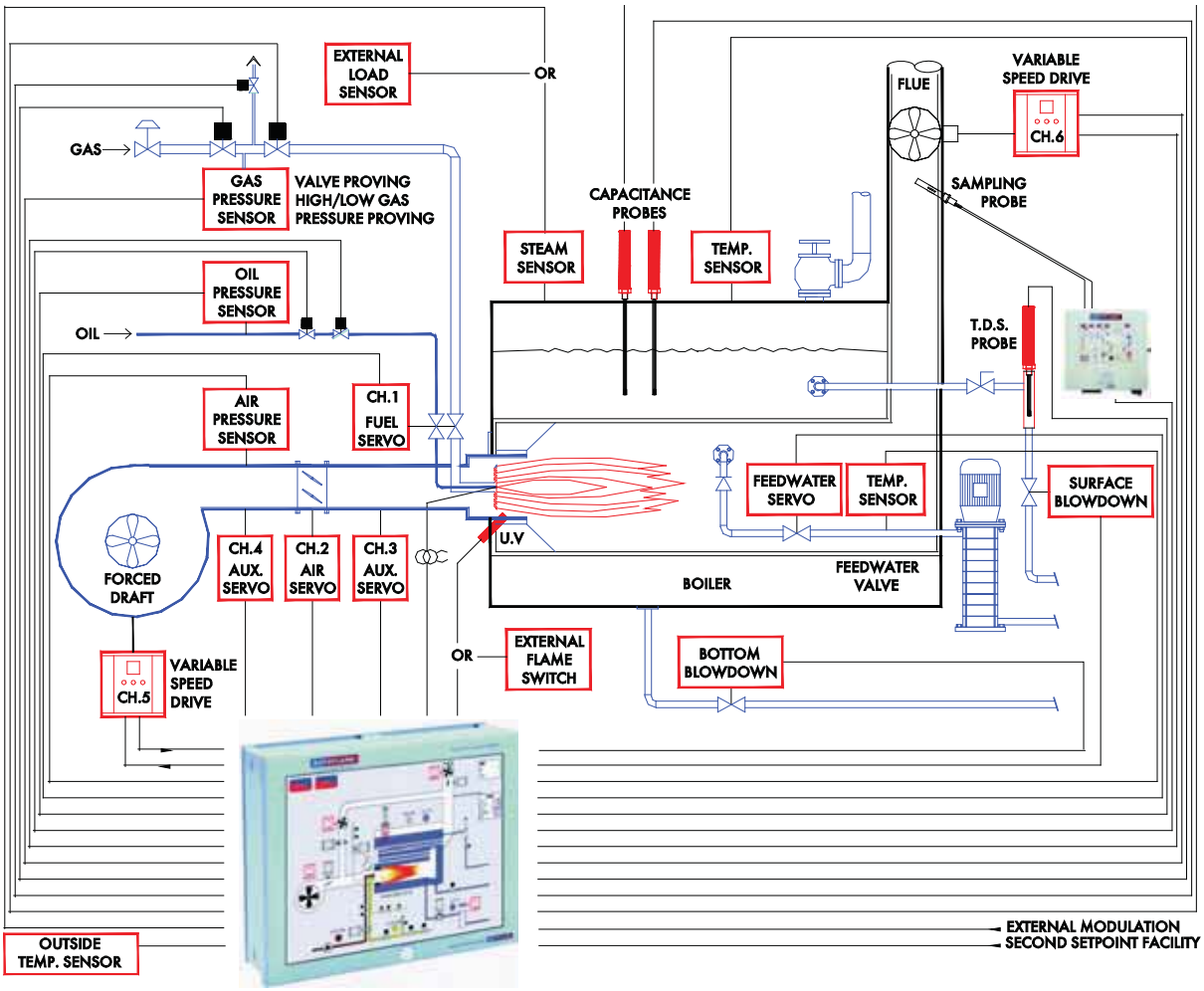

1.3 EXHAUST GAS ANALYSIS (EGA) 3 PARAMETER TRIM SYSTEM

With the EGA trim system it is possible to expand the MM system so that it will measure and display O2, CO2, CO, NO, NO2, SO2, exhaust temperature and boiler efficiency. Whilst at the same time inflicting minor corrections on the air damper position to ensure that the originally entered commissioned data is adhered to, irrespective of variations in stack pressure or barometric conditions. As standard 4-20mA outputs are available which can be connected with appropriate interfacing to an energy management system to track and record the information generated by the EGA. The MM/EGA control form is PID feed forward and interlopes between all entered data, it also carries error checking self diagnostic software for self identification of system component or data handling failure.

The 3 parameter trim function is achieved by every paired value for air and fuel having stored values of O2, CO2 and CO at the commissioned value. Deviations from these ideal values are held, this data is integrated and expressed as a degree angular value, so that the exact amount of air damper trim may be inflicted at any time to return the system to it's commissioned value at any load condition without compromising safety.

All the information available on the EGA can be accessed by one or all three of the following methods:

1. On the EGA touch screen display
2. Displayed on the MM display
3. 6 x 4-20mA output facility

EGA setup and calibration is carried out via the touch screen display.

1.4 INTELLIGENT BOILER SEQUENCING (IBS)

The Intelligent Boiler Sequencing feature, which is included in every MM, further extends the application possibilities of the system. The objective of this control form is to ensure that the minimum number of boiler/plant units are in operation at any one time to satisfy the heat requirement imposed upon the boiler plant.

There are two variations of IBS that can be selected by the user via the Options procedure. The first variation relates to heating boilers and the second variation to steam boilers.

1.4.1 Heating Boiler IBS

A maximum of 10 MMs may be interconnected by a two wire screened data cable. Any string of modules interconnected can have one of its modules identified as the lead or No 1 boiler. The identifying of the "lead" boiler is achieved by either of the following methods:

1. Connecting a mains voltage onto Terminal 88.
2. Instructing the modules via the DTI module.

Once a lead boiler has been selected the system works in the following way:

After a scan time, which can be user adjusted, has been completed the lead boiler identifies its own firing rate by looking at the position of the fuel valve in the load index and also the maximum heating capacity of the lead boiler. This information would normally be entered when this boiler/burner unit is commissioned. Having established percentage firing rate and maximum heating the IBS then calculates the amount of heat being contributed to the system by this boiler. The IBS in the lead MMthen contacts in turn each of the modules connected to the sequencing loop and gathers information from all the modules. The lead MM then calculates if it is required to turn a burner on to meet load demand or turn a burner off due to a decrease in demand.

There is a terminal connection on the MM for controlling a two pot valve that would normally be installed in the boiler's return pipe connection to the common return header. This facility ensures that boilers that are offline do not contribute return temperature water to the flow header thereby diluting the flow temperature to the building.

Example

There are four boilers interconnected as above each with a heating capacity of 586kW(2MBtu). In the event of each boiler firing 410kW (1.4MBtu) (70% of its maximum output), the lead boiler would instruct the No4 boiler to shut down and boilers 1,2 and 3 would adjust their firing rate to cover the load No 4 was producing.

In both cases the boilers are contributing a total of 1640 kW (5.6MBtu) to the system but after the intervention of the IBS, three boilers are carrying the load which is a more fuel efficient method of operation. If the building load continued to decrease the IBS would continue to take boilers offline provided the other boilers in the system can produce the current load demand.

When the load on the system increases the reverse process is applied. For example, when two boilers are firing at near 100% load the IBS would switch on the third boiler in the sequencing loop to assist with the generation of the heat requirement.

1.4.2 Steam Boiler Sequential Control

When the IBS feature is applied to steam boilers its operation is exactly the same as above but with additional features and enhancements as explained in the following.

In the case of heating boilers only two states in the control form exist, either on or off. When steam boiler variation of IBS is optioned there are three states which are controlled sequentially. The first is "online", this is where the boiler is operating purely under the control of the MM's internal PID load controller.

The second state is "standby", in this case the boiler is operated at a reduced setpoint. For example, if the online boiler or boilers are set at a setpoint of 7 Bar (100PSI) the standby boiler controls at a setpoint of 5 Bar (72 PSI). In this way if the load increases the standby boiler can begin to contribute steam quickly. The reduced setpoint is a user variable option in the same way as the normal control pressure setpoint.

The third state is offline, this is where the burner is shut down and the boiler is cold. If the load on the boiler house is increased this boiler would move into a standby condition.

Apart from the variations detailed above the steam sequencing works in precisely the same way as the heating boiler sequencing. The IBS feature ensures that at all times the minimum number of boilers are operational to satisfy the load imposed on the boiler house.

1.5 REMOTE MONITORING AND CONTROL (DTI)

Overview of Data Transfer Interface Operation

By means of our Data Transfer Interface (DTI) it is possible to collect operational data for up to 10 MMs to be transferred by RS232 to a local PC or Building Management System (BMS). This facility can also be accessed remotely. This cost effective system more than meets the requirements of today's EMS and BMS systems in providing all the necessary operational data and alarm status of the boiler plant to achieve its maximum energy efficient operation.

Up to a maximum of 10 MMs can be connected to one DTI by means of a daisy chain connection. The information gathered by the DTI from each MM is then available for transmission to the EMS or BMS.

Remote on/off control of the burners can also be achieved as well as adjustment of the temperature or pressure setpoints and selection of IBS lead boiler. To accommodate the status information from other plant related equipment the STI can handle up to 160 direct mains voltage inputs, 80 volt free outputs, 60 4-20mA inputs and 60 4-20mA outputs.

Possible Input/Output Values

Values available from each MM:

- Required boiler temperature or pressure.
- Actual boiler temperature or pressure.
- Burner on/off.
- Burner maximum firing rate.
- Burner firing rate.
- MM ID.
- Fuel selected
- Error conditions
- Auto/Hand/Low flame hold operation.
- All MM channels
- Number of hours run and start-ups for each fuel.
- Instantaneous and totalised fuel flow metering.
- Lockout/Error status
- Online combustion air pressure
- Online fuel pressure
- Data logging – online status, actual value and firing rate.
- Lead boiler status
- Burner firing status
- IBS optioned
- IBS status
- Enabled/Disabled status

EGA Data Available

- EGA operation optioned
- O2, CO2, CO, NO, SO2 and NO2 current values
- Exhaust gas temperature
- Delta T value
- Combustion efficiency value
- O2, CO2, CO, NO, SO2 and NO2 commissioned values
- Exhaust gas temperature commissioned values
- Delta T commissioned value
- Combustion efficiency commissioned values
- EGA status

DTI Control Input Values

- Change required setpoint – globally and individually
- Select lead boiler
- Shuffle sequencing – change sequencing order
- Boiler enable/disable
- Change load index/Firing rate

Water Level Data

- Water level status
- Steam temperature, feedwater temperature, pump status and valve position
- Instantaneous and totalised steam flow metering
- Water level alarm status
- 15 First Out annunciation status
- Total Dissolved Solids (TDS) target and measured values.

1.6 O2 INTERFACE MODULE

When an existing O2 measuring device is fitted the O2 interface module can receive a 4-20mA signal from the O2 probe and a 0-10V signal from the thermocouple mounted in the stack for use by the MM for one parameter O2 trim. Values for CO2, CO, Exhaust temperature and efficiency will be displayed as 0.

1.7 PC COMPATIBILITY

MM Infrared Upload/Download

The Mk 7 and Mini Mk7 MM units each contain an Infra Red Upload/Download port which enables all the commissioning data from a single unit to be downloaded onto a PC using Autoflame IR lead and software. Data can be stored and be uploaded into a different MM unit.

Information includes:

- Site name, Engineer, Boiler type, software versions and MM ID number.
- Fuel Air ratio positions
- EGA values
- All Options and Parameters set
- Fuel Flow Metering information
- Lockout/error history (last 16 events)
- Water level commissioned data
- First Out Annunciation labels
- Bottom blowdown timings and surface blowdown settings

This information can then be used to generate a hard copy Commissioning Report and be stored on disk for future reference.

1.8 ANALOGUE INPUT/OUTPUT MODULE

This unit has 6 individually programmable outputs and 6 individually programmable inputs providing a means of converting items of data within the MM system to 4 – 20 mA signals.

The unit can be supplied with outputs readily configured or with the use of the DTI lead and Windows Terminal mode software the outputs are user configurable.

The following functions are available for output data:

- Firing rate %
- Actual temperature/pressure
- Required temperature/pressure
- CH1 – Angular degrees
- CH2 – Angular degrees
- CH3 – Angular Degrees
- CH4 – Angular Degrees
- O2 flue %
- CO2 flue %
- CO Flue
- Exhaust Temperature
- Combustion efficiency
- Fuel flow rate
- MM error
- EGA error

SECTION 2.17: MK 7 MM - MICRO MODULATION

2.17.1 MK .7 EVOLUTION M.M. CONTROL UNIT

2.17.2 MK.7 COMMISSIONING AND SETTING UP PROCEDURES

2.17.2.1 Introduction

2.17.2.2 Commissioning Procedure

2.17.2.3 Options

2.17.2.4 Parameters

2.17.2.5 Setting Positioning Motors

2.17.2.5.1 Setup Procedure

2.17.2.5.2 Small Positioning Motor

2.17.2.5.3 Large Positioning Motor

2.17.2.5.4 Industrial Servomotor

2.17.2.5.5 Positioning Motors Direction Change

2.17.2.5.6 Replacing the Servomotor

2.17.2.5.7 Servicing the Servomotor

2.17.2.5.8 Servomotor Torque Ratings

2.17.2.6 Valve Proving

2.17.2.6.1 Explanation of Gas Valve Proving

2.17.2.6.2 Gas Pressure Sensors

2.17.2.6.3 Oil Pressure Sensor

2.17.2.6.4 Commissioning Valve Proving

2.17.2.7 Air Pressure Proving

2.17.2.7.1 Air Pressure Sensor

2.17.2.7.2 Air Pressure Tapped Fitting

2.17.2.8 Steam Pressure Sensor

2.17.2.9 Water Temperature Sensor

2.17.2.10 Outside Temperature Compensation

2.17.2.10.1 Outside Temperature Sensor

2.17.2.11 Mk7 Electrical Specification

2.17.2.11.1 Classifications

2.17.2.11.2 Inputs and Outputs

2.17.2.11.3 Fuse Ratings

2.17.2.11.4 Cable Specification

2.17.2.11.5 Terminals Description

2.17.2.12 Variable Speed Drives

2.17.2.12.1 Input and Output Signals in Relation to Frequency

2.17.2.12.2 Operational Characteristics of Inverter Output/M.M. Module Input in Relation to Frequency

2.17.2.12.3 Variable Speed Drive Safety Software
2.17.2.12.4 Control Philosophy
2.17.2.13 Installation Checks
2.17.2.14 Notes on Programming Fuel Air Positions
2.17.2.15 Programming Fuel Air Positions (Systems Without EGA)
2.17.2.16 Programming Fuel Air Postions With Quick Trim (Systems With A EGA)
2.17.2.17 Pilot Turndown/Check Switch Facility
2.17.2.18 Golden Start
2.17.2.19 Flue Gas Recirculation (FGR)

2.17.3 MK7 WIRING

2.17.3.1 Wiring Schematic
2.17.3.2 Water Level Schematic
2.17.3.3 Connection Between EGA and Mk7 MM
2.17.3.4 Sequencing Connection Diagram
2.17.3.5 Connection Between Mk7 MM and O2 Interface module
2.17.3.6 O2 Interface Module
2.17.3.7 EGA Trim Using A Variable Speed Drive (VSD)

2.17.4 FLAME SAFEGUARD

2.17.4.1 Burner Control Sequence Diagrams
2.17.4.1.1 Interrupted Pilot
2.17.4.1.2 Intermittent Pilot
2.17.4.1.3 Lockout
2.17.4.1.4 Post Burner Operation VPS
2.17.4.2 IR Self Check End View Scanner
2.17.4.3 Self Check UV Scanner
2.17.4.4 Self Check Side View UV Scanner
2.17.4.5 Standard European Side Viewing UV Scanner
2.17.4.6 Standard North American UV Scanner – End Viewing
2.17.4.6.1 Standard North American UV Scanner – End Viewing Dimensions
2.17.4.7 Selection Of UV Scanner Types
2.17.4.7.1 Normal Sensitivity
2.17.4.7.2 High Sensitivity
2.17.4.8 UV Self Adaptive Pulse Width Modulation
2.17.4.9 Dual UV and IR Scanner Operation.
2.17.4.10 Flame Detection Using An External Flame Switch
2.17.4.10.1 Flame Switch Configuration

2.17.5 ERROR CHECKING, DIAGNOSTIC CODES, FAULT ANALYSIS

2.17.5.1 Key to Errors

2.17.5.2 Burner Control Lockouts

2.17.5.3 Troubleshooting Guide

2.17.5.3.1 Gas/Air sensor Diagnostic Codes

2.17.5.3.2 UV Shutter Faults

2.17.5.3.3 UV Problems

2.17.6 THE PID CONTROLLER

2.17.6.1 Introduction

2.17.6.2 Proportional Band

2.17.6.3 Integral Control

2.17.6.4 Derivative Control

2.17.6.5 PID Controller Considerations

2.17.6.6 Super "I"

2.17.7 INTERACTING WITH THE MK7 INTERFACE

2.17.7.1 Commissioning Mode

2.17.7.2 Operating Mode – Mk6 Mode

2.17.7.3 Operating Mode – Mk7 Mode

2.17.7.4 Home Screen Buttons

2.17.7.5 Home Screen Components

2.17.7.6 System Configuration

2.17.7.7 Language Selection

2.17.7.8 Boiler Configuration

2.17.7.9 Viewing Options and Parameters

2.17.7.10 Online Changes

2.17.7.11 Single Point Change

2.17.7.12 Setting the Time

2.17.7.13 Setting Run Times

2.17.7.14 Changing Channel Labels

2.17.7.15 Status Screen

2.17.7.16 Setpoint History Screen

2.17.7.17 MM Servo Channels

2.17.7.18 Flame Safeguard

2.17.7.19 IBS

2.17.7.20 Fuel Flow Screen

2.17.7.21 Fuel Flow Commissioning

2.17.7.22 Valve proving System

2.17.7.23 EGA
2.17.7.24 Combustion Map
2.17.7.25 Water Levels
2.17.7.26 Steam Flow Metering
2.17.7.27 Outside Temperature Compensation
2.17.7.28 Lockout Record
2.17.7.29 Water Level Alarm
2.17.7.30 MM Errors
2.17.7.31 First Outs

2.17.8 TWIN BURNER OPERATION

2.17.8.1 Twin Burner Commissioning
2.17.8.2 Normal Operation
2.17.8.3 Twin Burner Applications With Water Level Control
2.17.8.4 Connection Between the Mk7 MM Modules for Twin Burner

2.17.9 HAND/AUTO AND LOW FLAME HOLD FACILITIES

2.17.9.1 Low Flame Hold

2.17.10 OTHER INFORMATION AND ILLUSTRATIONS

2.17.10.1 Mk 7 MM Fixing Holes & Dimensional Details
2.17.10.2 Schematic View Of IR Upload/Download
2.17.10.3 Using the IR Upload/Download Software
2.17.10.4 First Out Annunication
2.17.10.5 Maintenance and Servicing
2.17.10.6 Installation Precautions
2.17.10.7 External Modulation
2.17.10.8 Automatic Commission Of Air Pressure Values
2.17.10.9 Automatic Commission Of Gas Pressure Values

2.17.1 MK .7 EVOLUTION M.M. CONTROL UNIT

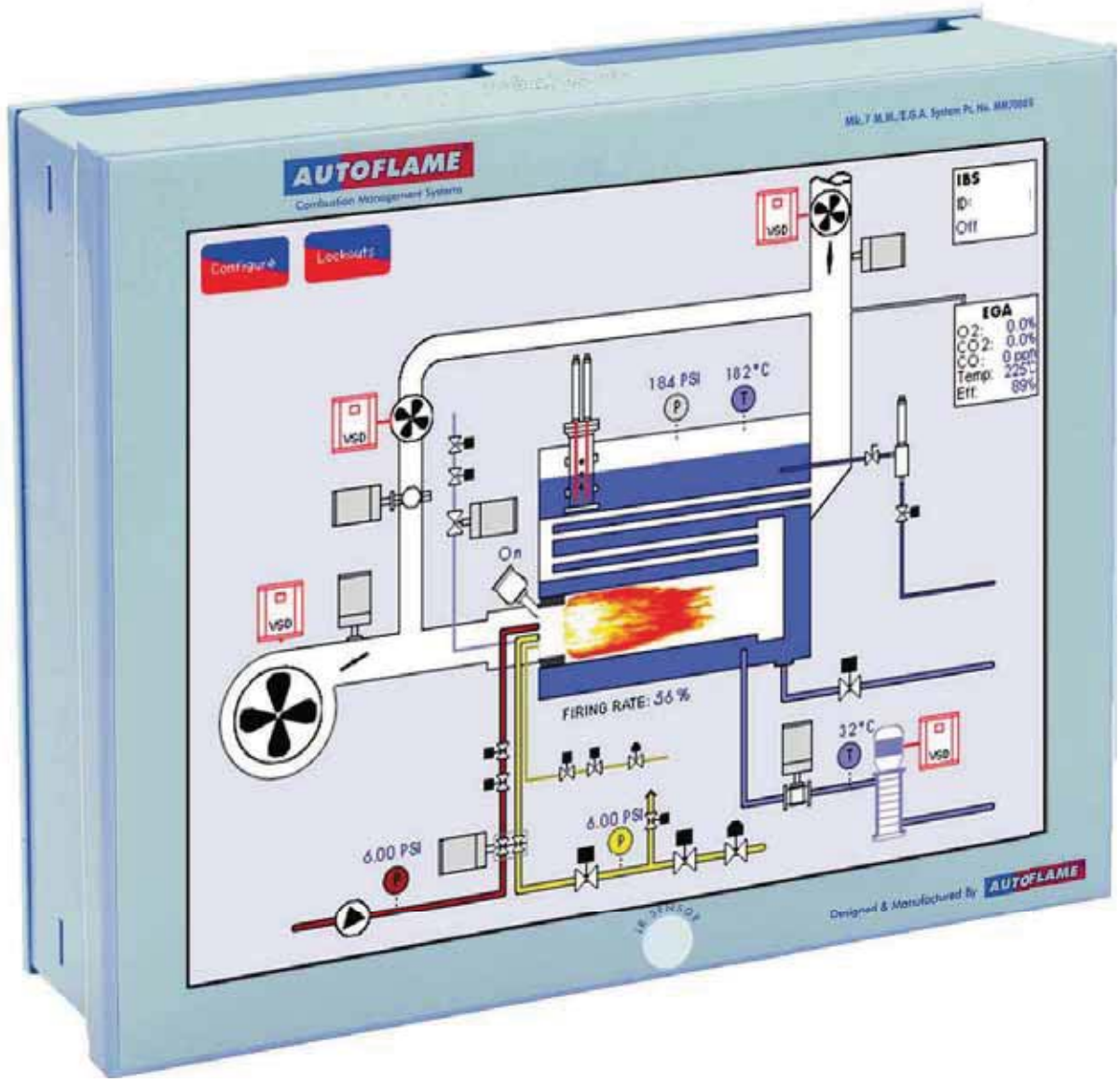

2.17.2 MK.7 COMMISSIONING AND SETTING UP PROCEDURES

2.17.2.1 Introduction

Important Note: Prior to commissioning, the fuel and air servomotors must be calibrated to ensure that the position of the valves and dampers are corresponding to the potentiometer feed-back signal as displayed on the Mk7, i.e. when the valve is fully closed, the Mk7 displays zero degrees.

The commissioning procedure as described must be strictly adhered to. Anybody commissioning a Micro Modulation system must have an adequate understanding of combustion plant. In the wrong hands hazardous conditions could be made to exist. The Autoflame product must only be installed, set-up, commissioned and adjusted by an Autoflame certified technical engineer.

The fundamental idea of the system is to set a fuel valve position and then set a corresponding air damper position. Care must be taken when adjusting the fuel and air positions so as not to create any unstable or hazardous combustion conditions, e.g. moving the fuel valve to the open position without increasing the air damper position. Improper use may result in property damage, serious physical injury or death.

If the system being commissioned is an M.M., without E.G.A., then a combustion monitor is required to check the exhaust gases. If the system does have an E.G.A., then a combustion monitor should not be necessary as the E.G.A. performs all normal exhaust gas measurements. When burning oil a smoke detection device is necessary to check that the smoke generated is within limits.

Ideally to implement commissioning as quickly as possible arrange for a substantial load on the boiler. The commissioning procedure can be interrupted due to excess temperature or pressure, causing the burner to turn off. In these instances the commissioning data accumulated so far is not lost. When the burner is called back on the system starts up automatically and commissioning can proceed from where it left off, providing that power is not removed to the system.

Once a low firing position has been established, the high fire position is entered first, then descending fuel/air positions are entered consecutively until finally a minimum fuel position is entered. The CH1 and CH2 positions must always be less than the ones previously entered. However with CH3 - CH6 it is possible to move the position above or below the previously entered point.

2.17.2.2 Commissioning Procedure

On a newly installed system the following procedures should be carried out as listed.

1. Check all interconnecting wiring between the M.M. and external components is correct.
2. Set options and parameters required (refer to sections 2.17.2.3 and 2.17.2.4).
3. Set up positioning motors.
4. Program fuel/air positions.

On a previously commissioned system, it is possible to omit steps 1, 2 or 3.

2.17.2.3 Options

Note: The Options and Parameters must only be changed by factory trained and certified technicians who have a thorough appreciation of the Autoflame combustion systems and the combustion process in general. Any person changing the Options and Parameters who does not have the correct factory training and understanding of these settings/adjustments may place themselves and others in a potentially dangerous situation.

Note: CH1, CH2, CH3 refer to the rows of buttons respectively starting with CH1 at the top.

Options and Online Changes are different. The following instructions refer to Options (accessible only whilst in commissioning mode).

Option values can be changed by entering the option mode. The password must first be entered. To enter the password follow the steps listed:

Either deselect and then select fuel or power down and restart.

If system is already commissioned, press Commission when the system starts up.

If the system is not already commissioned, commissioning mode will be entered automatically.

"ENTER PASSWORD" is displayed.
Use the calculator keypad to set the password codes.

Then press Continue to accept

The "Commission Mode" screen is then entered.
The MM will initially be disabled until commissioning data is entered or on reboot of a software upgrade.

To enable the MM press Disabled and choose 'Standard without Water Level' or 'Water Level Control Active'.

Once activated all the Options and Parameters can be accessed and changed to the users required setup.
Any number of Options and Parameters can be changed at one time. When the changes to the Options and Parameters have been completed please press save and exit, then press restart on the commission mode screen.
Refer to section 2.17.7 to interact with the Mk7 Interface.

Option No.	Factory Setting	Option Value	Description
1	**3**		**Boiler Temperature/Pressure Sensor Type**
		3	Temperature Sensor (MM10006 & 7) 0 - 400 C (0 - 752 F)
		6	Medium Pressure Sensor (MM10008) 2.0 - 23.0 Bar (30 - 330 PSI)
		7	High Pressure Sensor (MM10009) 2.0 - 38.0 Bar (30 - 550 PSI)
		8	Low Pressure Sensor (MM20020) 0.2 - 3.80 Bar (1.5 - 55 PSI)
		10	External temperature sensor (Voltage input) - Range set by parameters 52 - 56
		11	External pressure sensor (Voltage input) - Range set by parameters 52 - 56
2	**60**		**Motor Travel Speed During Modulation:** The Value is not specific to a time/distance ratio. If the speed of the motor is too fast, then increase this value. If too slow, decrease the value. At times other than modulation, the motors move at full speed or at the value set in Option 75. Movement is limited by the slowest channel, i.e. The slowest moving motor.
		5 - 240	Adjustment Range: 5 = 43 seconds from 0 degrees to 90 degrees 60 = 120 seconds from 0 degrees to 90 degrees 240 = 210 seconds from 0 degrees to 90 degrees
3	**0**		**Unused.**
4	**0**		**Unused.**
5	**1**		**Purge Position:** This selects the purge position. (Applicable to channels 1-4 when selected; see options 67 - 70). VSD channels 5 & 6, if optioned, purge at open position regardless of this option setting. It also applies to post purge if option 118 is set to a value greater than 0.
		0	Selected channels purge at HIGH position (high fire position)
		1	Selected channels purge at OPEN position (full span of servomotor as entered during commissioning)
6	**10**		**Proportional Control (P):** This option sets the proportional band. This is an offset below the setpoint. When the actual value reaches this point the burner will begin to modulate as it approaches the setpoint. *Example of proportional band offset: Required setpoint = 100 C, Proportional offset = 10 (i.e. option 6 set to value 10).*

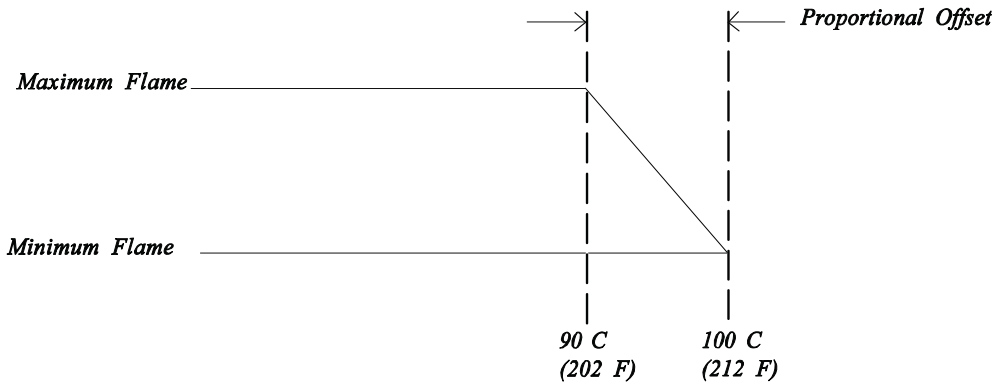

			Proportional band: Value entered - Centigrade, Fahrenheit, Bar or PSI dependent on the type of control sensor used and display units selected - Options 1 and 65.
		5 - 2000	If Centigrade, Fahrenheit or PSI units effective.
		0.5 - 200.0	If Bar units effective.
			Note: *Decreasing this value could lead to overshooting of the required setpoint. Increasing this value may cause the burner to modulate too early, taking a longer time to reach the required setpoint.*

Option No.	Factory Setting	Option Value	Description
7	**60**		**Integral Control Time (I):** Every 'n' seconds, 10% of the present offset from setpoint value is added (below setpoint) or subtracted (above setpoint) to the present proportional value. The value of 'n' is the number of seconds set in this option. It is possible to set this option to 'off'. If 'off' is selected, there will be no integral control. Parameter 106 enables a percentage variation.
		0	Off
		1 - 250	Seconds
8	**1**		**Number of servomotor channels to be enabled:** Channel "1" is always enabled (Fuel Position Motor). Set option 8 to the number of additional channels required (minimum of 1).
		1	Channels 1&2 in use.
		2	Channels 1, 2 & 3 in use.
		3	Channels 1, 2, 3 & 4 in use.
			Note: *If option 8 is changed after commissioning then the MM Unit will need to be re-commissioned unless this option is returned to its previous value.*
9	**1**		**Internal Stat Operation:** The 'internal stat' serves the purpose of turning the burner on and off according to the actual value relative to the required setpoint. There are three settings for this option. The first keeps the 'internal stat' closed all the time. In this instance, a 'working stat' must be fitted to the boiler. The second setting opens the 'internal stat' at an offset above the required setpoint and closes it at an offset below the required setpoint. The third setting opens the 'internal stat' at an offset above the required setpoint and closes it at an offset also above the required setpoint. The following diagrams illustrate this operation. The offset values are set in options 10 and 11.
		0	Internal stat always closed.
		1	Burner starts below required setpoint.
		2	Burner starts above required setpoint.
			Option 9 = 1, e.g. using 100 C (212 F). Required setpoint.
			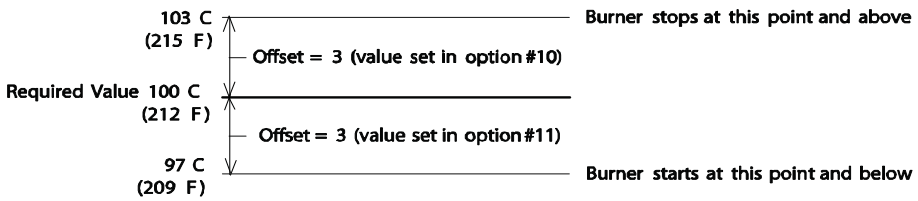
			Option 9 = 2, example using 100 C (212 F). Required setpoint.
			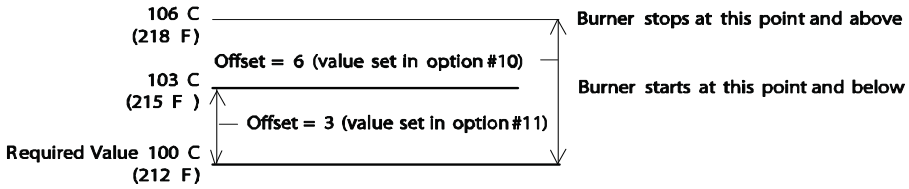
10	**3**		**Offset above required setpoint at which the burner is stopped:** Only relevant if option 9 is set to 1 or 2.
		2 - 1000	If Centigrade, Fahrenheit or PSI units effective
		0.2 - 100.0	If Bar units effective

Option No.	Factory Setting	Option Value	Description
11	**3**		**Offset below/above required setpoint at which the burner is started:** Only relevant if option 9 is set to 1 or 2.
		2 - 1000	If Centigrade, Fahrenheit or PSI units effective
		0.2 - 100.0	If Bar units effective
12	**0**		**EGA Options:** If this option has a setting of 1 - 9, then the EGA will trim and the burner must be commissioned with the EGA operational. The trim is applied to channel 2 or 5, dependent on the setting of option 76.
		0	EGA not optioned
		1	If an EGA error occurs, then the burner will continue to fire. The servomotors will return to the original commissioned fuel/air ratio and the trim function will not be operational until the EGA error is reset. No combustion/single point changes can be made whilst the EGA is in an error condition. Terminal 79 is not energised in the event of an EGA error.
		2	If an EGA error occurs, then the burner will stop firing. The burner will not start until the EGA error has been cleared and the EGA is inside its operating temperature range. Terminal 79 is not energised in the event of an EGA error.
		3	Same as 1, except terminal 79 is energised in the event of an EGA error.
		4	Same as 2, except terminal 79 is energised in the event of an EGA error
		5	Same as 1, plus the combustion limits are also tested (options 19 - 27)
		6	Same as 2, plus the combustion limits are also tested (options 19 - 27)
		7	System commissioned on MM Only - EGA used only for monitoring and display purposes.
		8	Same as 5, except terminal 79 is energised in the event of an EGA error.
		9	Same as 6, except terminal 79 is energised in the event of an EGA error.
		10	Burner stops if combustion limits are exceeded, EGA errors are ignored
13	**0**	0 - 30	**Reset options to original factory settings:** To reset all of the options back to their original factory set values, set option 13 to 26 and press enter.
14	**0**		**Twin Burner Application:** Twin burner operation enables two burners to run at the same time and with the same firing rate. The identification number must be set for each MM unit, e.g. 1 and 2.
		0	Normal single burner operation
		1	Twin burner operation for twin furnace firetube applications - Both burners always fire simultaneously. If one of the burners develops a fault, then both burners are shut down. Only one load detector is required and this is connected to the odd numbered MM unit.
		2	Twin burner operation for twin furnace watertube applications - Both burners can fire simultaneously or independently. If both burners are firing they will synchronise together and fire at the same firing rate. If an error/lockout occurs on one burner then the other burner will continue to fire independently. Two load sensors are required (one for each MM unit).
		3	Same as 2, but with water level control. The water level board must be connected to the odd numbered MM Unit. Both MMs must have the same software versions for this configuration.
			Note: *If communications are lost, then a flashing "Error 100" will appear when viewing the MM screen if option 14 is set to 1.*
15	**0**		**Unused.**

Option No.	Factory Setting	Option Value	Description
16	**0**		**Lead/Lag (IBS) and DTI:** A lead boiler can be selected by connecting a line voltage to terminal 88 on the appropriate MM. Only 1 MM may be selected as lead boiler at a time, or the sequencing will not operate. The lead boiler can be selected via the DTI. However, for this to be effective all the MM units on the system must have terminal 88 volt free. Line voltage on Terminal 88 overrides the DTI command.
		0	No sequencing - MM units still communicate and can be seen on the DTI.
		1	Sequencing enabled - MM units will respond to sequencing commands. Lead boiler is selected by a line voltage on terminal 88.
		2	Setpoint & enable/disable commands accepted from DTI.
		3	Both 1 and 2.
			Note: *Accurate fuel flow metering must be entered for sequencing to operate. An RS485 data cable (Belden 9501) must be connected between each MM unit (see section 2.17.3.4 for correct connection).*
17	**0**		**NO & CO Displayed when running on oil:** If fuels 2 or 3 are selected, then the displaying of CO & NO can be on or off. This option is only relevant if an EGA is operational on the system.
		0	NO & CO not displayed
		1	NO & CO is displayed normally.
18	**1**		**Carry Forward of Trim:** When the system modulates, the correction that may be existing on the air damper position can be carried forward. This option is only relevant if an EGA is operation on the system.
		0	No carry forward of trim.
		1	Trim carried forward.
19	**0**		**Upper Offset Limit % O_2:** EGA Limits: Options 19 - 27 are only relevant if an EGA is operational on the system. Option 12 must be set to 5,6, 8, 9 or 10 if any of the following limit checks are to be invoked. This is an offset from the commissioned values.
		0 - 100	% O_2
20	**0**		**Upper Offset Limit % CO_2:**
		0 - 100	% CO_2
21	**0**		**Upper Offset Limit ppm CO:**
		0 - 200	ppm CO
22	**0**		**Lower Offset Limit % O_2:**
		0 - 100	% O_2
23	**0**		**Lower Offset Limit % CO_2:**
		0 - 100	% CO_2
24	**0**		**Unused.**

Option No.	Factory Setting	Option Value	Description
25	**0**		**Absolute Value % O_2:** System checks for O_2 values lower than the value specified in this option regardless of the commissioned values.
		0 - 200	% O_2
26	**0**		**Absolute Value % CO_2:** System checks for CO_2 values higher than the value specified in this option regardless of the commissioned values.
		0 - 200	% CO_2
27	**0**		**Absolute Value ppm CO:** System checks for CO readings higher than value specified in this option regardless of the commissioned values.
		0 - 200	ppm CO
28	**20**		**Trim Threshold:** This option is only relevant if an EGA is operational on the system. The value set in this option is subtracted from the required setpoint. If the actual value is below the offset, then the EGA will not operate. If the trim is to be effective at all times, then set the value to zero. This option must also be set to zero for the EGA to operate when external modulation is optioned.
		0 - 50 0 - 5.0	If Centigrade, Fahrenheit or PSI units effective. If Bar units effective.
			Note: *No single point changes can be made if the actual value is below the offset value.*
29	**1**		**Golden Start:** See section 2.17.2.18. Parameter 15 - sets the time the golden start is maintained after ignition.
		0 1	Golden Start operates. Golden Start does not operate.
30	**50**		**DTI Required Setpoint Minimum Limit:** If the system is being used with a DTI a maximum and minimum limit for the required setpoint must be set. If a value is received from the DTI that is outside these limits, it will be ignored and the system uses its previous required setpoint. Practical range is limited to range of sensor selected.
		5 - 9990 0.5 - 999.0	If Centigrade, Fahrenheit or PSI units effective. If Bar units effective.
31	**100**		**DTI Required Setpoint Maximum Limit:**
		5 - 9990 0.5 - 999.0	If Centigrade, Fahrenheit or PSI units effective. If Bar units effective.
32	**20**		**Trim Delay:** After ignition, the EGA does not sample for the period of time set in this option (only relevant if EGA is operational on system). This allows for the combustion to stabilise before sampling commences. The timing starts at the ignition point.
		0 - 250	Period (seconds) after ignition no sampling takes place.
33	**1**		**MM Identification:** The identification number must be set on all MM Units in the boiler house. If not, then problems will occur with sequencing/twin burner and with the DTI communications. Each unit must have a different identification number.
		1 -10	Identification number

Option No.	Factory Setting	Option Value	Description
34	**5**		**Rating of Burner:**
		1 - 999	See option 77 for units.
35	**10**		**Sequence Scan Time:** This is the time period between sequencing requests from the lead MM. On the sequence scan time, the lead MM will demand lag burners to be brought online or offline, depending on load requirements. See parameters 86 and 87 for thresholds.
		1 - 100	Sequence scan time (minutes).
			Note: *Accurate fuel flow metering must be entered for sequencing to operate. An RS485 data cable (Belden 9501) must be connected between each MM unit (see section 2.17.3.4 or correct connection).*
36	**0**		**EGA Sensor Selection:** Available when using an EGA System fitted with NO and SO2 sensors. The following option is for selecting the type of sensors used.
		0	Neither
		1	NO only
		2	SO2 only
		3	NO and SO2
37	**0**		**Derivative Control Time Interval (D):** The time interval between the controller comparing the actual value and the required setpoint value. To enable derivative control this option must be set greater than 10.
		0	Off.
		1- 200	Seconds.
38	**2**		**Derivative control (D) deadband:** The deadband is the margin above and below the required setpoint in which no derivative control occurs.
		0 - 15	If Centigrade, Fahrenheit or PSI units effective.
		0 - 1.5	If Bar units effective.

Option No.	Factory Setting	Option Value	Description
39	**10**		**Derivative control (D) response sensitivity:** The sensitivity value indicates the amount of percentage firing rate increase or decrease that is inflicted by the derivative action e.g. if the chosen value was 10% then 10% firing rate would be added to the existing rate of fire i.e. if the burner was firing at 50% load and the derivative action was triggered the firing rate would increase by 10+50 to 60%. The following is an example of the above control philosophy in action: ***Note:*** *"Control Time Interval" Set to 20 seconds* *"Deadband" Set to 2 C (2 F)* *"Response Sensitivity" Set to 10%* *Setpoint Information:* *"Required Setpoint" Set to 90 C (190 F)* *"Actual Value" Reads 86 C (186 F)* *Firing Rate Information:* *Burner firing at 50% of capacity* *In the example situation there has been 4 C (4 F) drop in temperature below the required setpoint. The deadband is set at 2 C (2 F), therefore the derivative action will be triggered as the deviation from the required setpoint is in excess of 2 C (2 F). In this example, 10% will be added to the 50% firing rate resulting in an increase in firing rate to 60% of capacity.* *The "Control Time Interval" is set for 20 seconds and if after this time interval the actual value is not within the 2 C (2 F) deviation from the required deadband, another 10% would be added to the 60% firing rate which would result in a 70% firing rate.* *By careful selection of "Control Time Interval", "Deadband" and "Response Sensitivity" an ideal response to rate of change over time can be configured. The control philosophy detailed operates inversely if the "Actual" temperature exceeds the required setpoint and is outside the "Deadband".*
		1 - 100	% Sensitivity
40	**0**		**Warming Facility for Low Pressure Steam Sequencing:** For lead/lag (sequencing) applications where check (non-return) valves are not installed, it is not possible to use a phantom setpoint to keep the boilers in a standby warming condition. Therefore, the facility exists to install a thermostat (aquastat) in the boiler shell. The thermostat will input 230V/120V on terminal 93 and this initiates warming (see option 41). The boiler will remain in a warming state based on the settings for options 53 and 54.
		0	Disabled
		1	Enabled
41	**0**		**2/3 State Sequencing:** This option sets 2 states of operation for the lag boilers. Either one boiler is kept in a standby warming state and the other boilers are off, or all lag boilers are kept in a standby warming state and there are no off boilers.
		0	3 State Sequencing: LEAD, STANDBY, OFF, OFF, OFF, OFF...
		1	2 State Sequencing: LEAD, STANDBY, STANDBY, STANDBY...

Option No.	Factory Setting	Option Value	Description
42	**20**		**Warming facility for medium/high pressure steam sequencing - phantom setpoint:** For lead/lag (sequencing) applications where check (non-return) valves are installed, it is possible to use a phantom setpoint to keep the boilers in a standby warming condition. This value is an offset below the normal required setpoint. When the phantom setpoint is in effect, the burner is held at a low flame position.
		0 - 100	If Centigrade, Fahrenheit or PSI units effective.
		0 - 10.0	If Bar units effective.
43	**5**		**Offset above phantom setpoint when the burner stops:**
		2 - 50	If Centigrade, Fahrenheit or PSI units effective.
		0.2 - 5.0	If Bar units effective.
44	**5**		**Offset below phantom setpoint when the burner starts up:**
		2 - 50	If Centigrade, Fahrenheit or PSI units effective.
		0.2 - 5.0	If Bar units effective.
45	**0**		**External Modulation:** When enabled, the internal PID control is disabled and the firing rate is set by an external controller applied to the appropriate input terminals 7, 8 and 9. This input control signal can be 0 - 10V, 2 - 10V, 4 - 20mA or 0 - 20mA representing low to high fire. A high limit stat must be fitted. A working stat may be required depending on the setting of this option.
		0	Disabled.
		1	Enabled - No working stat facility (internal stat always closed - option 9), no local display of pressure/ temperature. Required setpoints not displayed. An external working stat is required.
		2	Enabled - No working stat facility (internal stat always closed - option 9), load sensor used for local display of pressure/temperature. Required setpoints not displayed. An external working stat is required.
		3	Enabled - Load sensor used for working stat facility and for local display of pressure/temperature. Required setpoints displayed. External working stat not required.
			Note: *The fuel flow metering must be entered (option 57). If this is not entered then the MM will remain in the low flame hold state. Option 55 must be set to 0 if option 45 is set to 1, 2 or 3.*
46	**0**		**Unused.**
47	**0**		**Cold Start Routine:** On burner start-up, if the actual value is below 30% of the required setpoint, then the burner will be held at the low flame hold position for the number of minutes set in this option.
			When the actual value exceeds the P band offset on the PID philosophy, the burner reverts back to normal PID control. If the burner turns off then the timer is reset.
		0	Off.
		1 - 2000	Number of minutes cold start operates.
			Note: *The cold start routine cannot be used with IBS and/or external modulation (options 45 and 55).*

Option No.	Factory Setting	Option Value	Description
48	**0**		**Flue Gas Recirculation - Timer:** This is the time that the MM channels (positioning motors/ variable speed drives) are held at the FGR start positions, after which modulation then takes place. This timer starts at the end of main flame proving. Also see parameter 90 regarding the commissioning of the FGR positions.
		0	Disabled.
		1 - 600	Seconds.
49	**0**		**Flue Gas Recirculation - Offset:** This is an offset from the required setpoint. The MM channels (positioning motors/variable speed drives) are held at the FGR start positions until the actual value reaches the offset value below the required setpoint.
		0 - 50	If Centigrade, Fahrenheit or PSI units effective.
		0 - 5.0	If Bar units effective.
50	**0**		**Flue Gas Recirculation - Flue Gas Temperature:** The MM channels (positioning motors/ variable speed drives) are held at the FGR start positions until the flue gas temperature has reached 120 C or 248 F. (An EGA Must be present and optioned).
		0	Not optioned.
		1	Optioned.
51	**0**		**Unused:**
52	**0**		**Unused:**
53	**0**		**Steam Boiler Sequencing Burner 'off' time:** The steam boiler type sequencing is enabled by setting option 1 to a respective pressure sensor. Options 42, 43 and 44 are relevant to the "standby" boiler operation.
		0	Off
		1 - 200	Burner "Off" time (minutes) during warm up cycle. Intelligent Boiler Sequencing - Steam boiler applications.
54	**5**		**Steam Boiler Sequencing Burner 'on' time:**
		1 - 30	Burner "On" time (minutes) during warm up cycle. Intelligent Boiler Sequencing - Steam boiler applications.
55	**0**		**Internal PID/External Modulation selectable using Terminal 88:** (Cannot be used with lead/lag Intelligent Boiler Sequencing)
		0	Normal Operation - Internal PID
		1	Terminal 88 = 0V - Internal PID Terminal 88 = Line voltage - external modulation. This option also removes the reduced setpoint from the Mk7 display if it is not a requirement. ***Note:*** *Option 45 must be set to zero if option 55 set to 1. Option 9 will be used as set. If option 9 is set to zero, the required setpoint is not displayed. The fuel flow metering must be entered (option 57). If this is not entered, then the MM will remain in the low flame hold state.*

Option No.	Factory Setting	Option Value	Description
56	**1**		**Operation of alarm output for all systems errors/lockouts and EGA errors on terminal 79:**
		1	Relay normally off, on when alarm.
		2	Relay normally on, off when alarm.
			Note: *This is a switched neutral and not an output terminal*
57	**0**		**Fuel Flow Metering:** Fuel flow metering is required for several functions to work correctly. Autoflame recommend entering dummy points if a fuel meter is not available to measure actual flow. Setting this to 1 will initiate fuel flow metering once the burner is firing. See section 2.17.7.21.
		0	No flow metering.
		1	Flow metering operates and recalibrated.
		2	Totalised flow metering reset to zero for selected fuel.
58	**15**		**Fuel flow metering ignition delay:** Delay after ignition until fuel flow metering begins.
59	**0**		**Unused.**
60	**1**		**Hand/Auto Bumpless Transfer Operation:**
		0	When changing from Auto to Hand - Servos go to the last known hand position. When changing from Hand to Auto - Servos stay in the current hand position.
		1	When changing from Auto to Hand - Servos stay in the current Auto position. When changing from Hand to Auto - Servos stay in the current hand position.
		2	As 0, but hand position is not stored in permanent memory. (E.g.. After a powerdown)
			Note: *Low Flame Hold is not a hand position. When changing from LFH to Auto - Servos will go to the last known Auto position.*
61	**1**		**Flow Metering Units: Fuel 1- Gaseous:**
		0	Cubic feet.
		1	Cubic meters.
62	**3**		**Flow Metering Units: Fuel 2 - Liquid:**
		1	Lbs.
		2	Kilograms.
		3	Litres.
		4	US Gallons.
63	**3**		**Flow Metering Units: Fuel 3 - Liquid:**
		1	Lbs.
		2	Kilograms.
		3	Litres.
		4	US Gallons.

Option No.	Factory Setting	Option Value	Description
64	**1**		**Flow Metering Units: Fuel 4 - Gaseous:**
		0	Cubic feet.
		1	Cubic meters.
65	**0**		**Type of Fuel Flow Metering:**
		0	Old fuel flow metering.
		1	Imperial fuel flow metering.
		2	Metric fuel flow metering.
66	**0**		**Firing Rate Limiter:** The value of this option is used to limit the maximum firing rate that can be attained by the system. This limit is imposed in Auto and Hand modes.
		1 - 100	Maximum firing rate permitted (%).
			Note: *This does not operate when firing rate is controlled by the DTI, external modulation or IBS.*
67	**1**		**Channel 1 Purge Position:** The following options tell the MM which channels are to be included in the purge sequence. See option 5 for purge position.
		0	Channel 1 to purge position.
		1	Channel 1 to remain closed for purge.
68	**0**		**Channel 2 Purge Position:**
		0	Channel 1 to purge position.
		1	Channel 1 to remain closed for purge.
69	**0**		**Channel 3 Purge Position:**
		0	Channel 1 to purge position.
		1	Channel 1 to remain closed for purge.
70	**0**		**Channel 4 Purge Position:**
		0	Channel 1 to purge position.
		1	Channel 1 to remain closed for purge.
71	**0**		**Fuel 1 - Fuel Type:**
		0	Natural Gas.
		5	Fuel 1.
72	**1**		**Fuel 2 - Fuel Type:**
		1	Light distillate oil.
		2	Heavy fuel oil.
		4	Fuel 2.
		5	Fuel 2.

Option No.	Factory Setting	Option Value	Description
73	**1**		**Fuel 3 - Fuel Type:**
		1	Light distillate oil.
		2	Heavy fuel oil.
		4	Fuel 2.
		5	Fuel 2.
74	**0**		**Fuel 4 - Fuel Type:**
		0	Natural gas.
		5	Fuel 4.
75	**0**		**Purge Motor Travel Speed:** During a purge sequence, the motor travel speed can be set independent of option 2. This effects all selected channels.
		0 - 100	0 = Quickest time. 100 = Slowest time.
76	**0**		**Trim channel:** If an E.G.A. is optioned, the trim can be applied to either Channel 2 (positioning motor) or channel 5 (VSD). If trim on channel 5 is used, options 91 to 97 must be entered correctly.
		0	Trim on channel 2.
		1	Trim on channel 5.
77	**0**		**Burner rating units:** Display purposes only for fuel flow metering.
		0	KW x 100 /hr
		1	Kg x 100 /hr
		2	MW /hr
		3	Btu x 100 /hr
		4	Hp x 100 /hr
		5	lbs x 100 /hr
		6	Btu x 1000 /hr
		7	Hp x 10 /hr
		8	lbs x 1000 /hr
		9	Btu x 1000 000 /hr
78	**0**		**Unused.**
79	**0**		**Lowest required setpoint:** Minimum required setpoint allowed when OTC is optioned. See option #80 and parameter #88. Point 3 - see diagram in section 2.17.7.27
		0 - 995	If Centigrade, Fahrenheit or PSI units effective.
		0 - 99.5	If Bar units effective.
80	**0**		**Outside temperature compensation:**
		0	Disabled.
		1	Enabled.
			Note: *A line voltage on terminal #93 invokes a 'Night Setback' offset value, see option #85.*

Option No.	Factory Setting	Option Value	Description
81	**140**		**Maximum boiler required setpoint at minimum outside temperature:** Point 1- See diagram in Section 2.17.5.26.
		50 - 999	If Centigrade, Fahrenheit or PSI units effective.
		5.0 - 99.9	If Bar units effective.
			Note: *Range is limited in accordance with the sensor selected in Option 1.*
82	**-30**		**Minimum outside temperature:** Point 4 - See diagram in Section 2.17.7.27
		- 40 +40	If Centigrade units effective.
		-40 +105	If Fahrenheit units effective.
83	**65**		**Minimum boiler required setpoint at maximum outside temperature:** Point 3 - see Section 2.17.7.27
		50 - 999	Value limited in accordance with sensor selected by Option 1.
84	**30**		**Maximum outside temperature:** Point 4 - see Section 2.17.7.27
		-20 +40	If Centigrade units effective.
		-40 +105	If Fahrenheit units effective.
85	**10**		**Night setback 'depression' offset value:** This offset is subtracted from the normal required setpoint and activated by a line voltage on Terminal 93.
		0 - 100	If Centigrade, Fahrenheit or PSI units effective.
		0 - 10.0	If Bar units effective.
			Note: *Only for use with an OTC sensor and Option 80 enabled.*
86	**0**		**Channel 1 softened error checking select:** Increases the positioning error from 0.1° to 0.5° for an industrial servomotor.
		0	CH1 normal positioning motor.
		1	CH1 industrial positioning/softened error checking.
87	**0**		**Channel 2 softened error checking select:**
		0	CH2 normal positioning motor.
		1	CH2 industrial positioning/softened error checking.
88	**0**		**Channel 3 softened error checking select:**
		0	CH3 normal positioning motor.
		1	CH3 industrial positioning/softened error checking.
89	**0**		**Channel 4 softened error checking select:**
		0	CH4 normal positioning motor.
		1	CH4 industrial positioning/softened error checking.
90	**0**		**VSD operation channel 5:**
		0	Not optioned.
		1	Optioned.

Option No.	Factory Setting	Option Value	Description
91	**0**		**Output from MM to VSD channel 5:**
		0	Output units displayed as 4 - 20 mA
		1	Output units displayed as 0 - 10 V
		2	Output units displayed as Hz
92	**25**		**Output low speed from MM to VSD channel 5:** This should match the VSD low speed.
		1 - 200	Hertz.
93	**50**		**Output high speed from MM to VSD channel 5:** This should match the VSD high speed.
		1 - 200	Hertz
94	**2**		**Input signal to MM from VSD channel 5:**
		0	Output units displayed as 4 - 20 mA.
		1	Output units displayed as 0 - 10 V.
		2	Output units displayed as 0 - 20 mA.
95	**0**		**Input units displayed, VSD channel 5:**
		0	Selected input signal.
		1	Hertz.
96	**0**		**Input low speed to MM from VSD channel 5:** This should match the VSD low speed.
		0 - 200	Hertz.
97	**50**		**Input high speed to MM from VSD channel 5:** This should match the VSD high speed.
		0 - 200	Hertz.
98	**0**		**Unused.**
99	**0**		**Unused.**
100	**0**		**VSD operation channel 6:**
		0	Not optioned.
		1	Optioned.
101	**0**		**Output from MM to VSD channel 6:**
		0	Output units displayed as 4 - 20 mA.
		1	Output units displayed as 0 - 10 V.
		2	Output units displayed as Hz.
102	**25**		**Output low speed from MM to VSD channel 6:** This should match the VSD low speed.
		1 - 200	Hertz.
103	**50**		**Output high speed from MM to VSD channel 6:** This should match the VSD high speed.
		1 - 200	Hertz.

Option No.	Factory Setting	Option Value	Description
104	**2**		**Input signal to MM from VSD channel 6:**
		0	Output units displayed as 4 - 20 mA.
		1	Output units displayed as 0 - 10 V.
		2	Output units displayed as 0 - 20 mA.
105	**0**		**Input units displayed, VSD channel 6:**
		0	Selected input signal.
		1	Hertz.
106	**0**		**Input low speed to MM from VSD channel 6:** This should match the VSD low speed.
		0 - 200	Hertz.
107	**50**		**Input high speed to MM from VSD channel 6:** This should match the VSD high speed.
		0 - 200	Hertz.
108			**Unused.**
109			**Unused.**

Option No.	Factory Setting	Option Value	Description
			For safety reasons, Options, 110 - 150 also have to be entered in as Parameters. It is the responsibility of the commissioning engineer to ensure that all settings are set in accordance with the appropriate standards, local codes and practices e.t.c..
			If the MM system is stuck in the 'idle' condition, it is likely that options 110 - 150 are not identical to Parameters 110 - 150. If the commissioning mode is entered the relevant Options/Parameters not set correctly will be displayed on the commissioning mode screen.
110	**1**		**Burner flame scanner type:**
		1	Standard scanner. Internal non-permanent operation.
		2	Self check scanner. Internal permanent operation.
111	**0**		**Pilot:**
		0	Interrupted pilot. (Pilot shuts off after main flame is established).
		1	Intermittent pilot (expanding flame). (Pilot always on).
		2	No pilot
		3	Continuous pilot (Contact Autoflame before use).
112	**40**		**Pre purge time:**
		5 - 300	Seconds/minutes - see Option 135.
113	**3**		**Pre ignition time:** Time ignition transformer is on before pilot gas valve opens.
		3 - 5	Seconds.
114	**3**		**First safety time:** Time pilot valve is open before UV is checked.
		3 - 10	Seconds.
115	**3**		**Pilot prove time - pilot trial for ignition (PTFI):**
		3 - 5	Seconds.
116	**3**		**Fuel 1 & fuel 4 (gas) second safety time - main trial for ignition (MTFI):** Pilot/Main valve overlap. (Not Applicable to expanding flame - see Option 111).
		3 - 10	Seconds.
117	**5**		**Main flame proving time:** Time period from main valves open to burner modulating - delay to modulation.
		5 - 20	Seconds.
118	**0**		**Post purge time:**
		0	No post purge.
		1 - 100	Seconds/Minutes.
			Note: *U.V. Not checked during post purge. See also Option 135.*

Option No.	Factory Setting	Option Value	Description
119	**10**		**Control box recycle time:** Time delay from burner shut down to startup.
		3 - 120	Seconds.
120	**10**		**UV Threshold:**
		5 - 50	Minimum flame signal strength during pilot. (All other times UV Threshold is fixed at 5)
121	**5**		**Delay from start of pre purge after which air switch checked:**
		5 - 10	Seconds.
122	**0**		**Flame switch operation:** If this operation is enabled Terminals 85/86 are used in conjunction with a flame switch to monitor the presence of a flame.
		0	Normal UV Scanner operation.
		1	Flame switch operation.
		2	InfraRed scanner operation.
		3	Combined UV and IR.
123	**3**		**Fuel 2 & 3 (oil programmes) second safety time - main trial for ignition (MTFI):** Pilot/main flame overlap. (Not applicable to expanding flame - see Option 111).
		3 - 15	Seconds.
124	**1**		**Gas valve proving pressure sensor type:**
		0	Nominal range 0 - 25" wg./0 - 65 mBar/ 0 - 1 PSI (Sensor MM 60006) ***Note:*** *PSI display not available with this sensor.*
		1	Nominal range 0 - 135" wg./0 - 340 mBar/ 0 - 5 PSI (Sensor MM 60008)
		2	Nominal range 0 - 300" wg./0 - 750 mBar/ 0 - 11 PSI (Sensor MM 60011)
		3	Nominal range 0 - 550" wg./0 - 1380 mBar/ 0 - 20 PSI (Sensor MM 60012)
		4	Nominal range 0 - 1650" wg./0 - 4125 mBar/ 0 - 60 PSI (Sensor MM 60014)
125	**0**		**Gas valve proving & high-low pressure limit checked - fuel 1:**
		0	Not checked on fuel 1.
		1	Gas valve proving on & high/low pressure limits checked (see Options 136/137).
		2	Do Not Select.
		3	Gas high/low pressure limit. If Options 136/137 are set to 0, then the online values are displayed only.
		4	External VPS optioned. It is possible within the unit to use an external VPS for this operation. If this is set then the system will wait for a mains voltage input on Terminal 55 to confirm that the external VPS operation is completed. The time period for this is 10 minutes before the voltage input must be seen otherwise a lockout will occur (contact Autoflame before use).
126	**0**		**Oil high-low pressure limit checked - fuel 2:**
		0	Not checked on fuel 2.
		1	Do Not Select.
		2	Oil high/low pressure limit. If options 139/140 are set to 0, then the online values are displayed only.
		3	Do Not Select.
		4	External VPS. See Option 125 for information.

Option No.	Factory Setting	Option Value	Description
127	**0**		**Oil high-low pressure limit checked - fuel 3:**
		0	Not checked on fuel 3.
		1	Do Not Select.
		2	Oil high/low pressure limit. If options 139/140 are set to 0, then the online values are displayed only.
		3	Do Not Select.
		4	External VPS. See Option 125 for information.
128	**0**		**Gas valve proving & high-low pressure limit checked - fuel 4:**
		0	Not checked on fuel 4.
		1	Gas valve proving on & high/low pressure limits checked (see Options 136/137).
		2	Do Not Select.
		3	Gas high/low pressure limit. If Options 136/137 are set to 0, then the online values are displayed only.
		4	External VPS. See Option 125 for information.
129	**0**		**VPS Operation:** This Option must be set to 0 during commissioning. Once commissioning is complete it can then be set to 1
		0	VPS operates before burner start up.
		1	VPS operates after burner run (low gas not checked before burner starts).
130	**2**		**Gas valve proving:**
		0	Two valve gas valve proving.
		1	Three valve gas valve proving. Vent valve normally closed.
		2	Three valve gas valve proving. Vent valve normally open.
		3	Two valve gas valve proving - single valve pilot.
		4	Three valve gas valve proving - single valve pilot. Vent valve normally closed.
		5	Three valve gas valve proving - single valve pilot. Vent valve normally open.
131	**0**		**Gas pressure units:** PSI not available for MM 60006 - See Option 124
		0	"wg (inches water gauge).
		1	mbar (millibars).
		2	PSI (pounds per square inch) - units displayed to 2 decimal places.
132	**20**		**Gas valve proving time:**
		10 - 30	Seconds.
133	**5**		**Maximum pressure change allowed during proving time:**
		0.1 - 5	"wg/ 0.2 - 12.4 mBar/ PSI not available (Sensor MM60006)
		0.4 - 25.2	"wg/ 1.1 - 63mBar/ 0.02 - 0.91 PSI (Sensor MM60008)
		1 - 56	"wg/ 2.5 - 140mBar/ 0.04 - 2.03 PSI (Sensor MM60011)
		1.9 - 103	"wg/ 4.6 - 356 mBar/ 0.07 - 5.16 PSI (Sensor MM60012)
			Note: *See Option 124 for pressure sensor range in use, default value will change accordingly.* *See Section 2.17.2.6*
134	**3**		**VPS valve opening time:**
		3 - 20	Seconds.

Option No.	Factory Setting	Option Value	Description
135	**0**		**Change purge time:**
		0	Seconds.
		1	Minutes.
		2	NFPA post purge - post purge time is set in Option 118.
			Note: *If this Option is set to 2 (NFPA post purge) then Option 118 must be set to a value of 15 or greater otherwise a lockout warning message will occur. During the NFPA post purge the servo motors will remain at the position that they were in before a normal shutdown or lockout (see also Option 67 - 70). The NFPA post purge will occur under any normal shutdown or lockout at any point in the firing sequence.*
136	**5.0**		**Gas pressure switch - offset lower limit:** This Option has two functions: 1. Static inlet pressure check - lower limit. This is checked prior to burner firing. 2. Run pressure check - lower limit. This is an offset from the commissioned value. Note Options 124/131.
		0.1 - 5	"wg/ 0.2 - 12.4 mBar/ PSI not available (Sensor MM60006)
		0.4 - 25.2	"wg/ 1.1 - 63mBar/ 0.02 - 0.91 PSI (Sensor MM60008)
		1 - 56	"wg/ 2.5 - 140mBar/ 0.04 - 2.03 PSI (Sensor MM60011)
		1.9 - 103	"wg/ 4.6 - 356 mBar/ 0.07 - 5.16 PSI (Sensor MM60012)
137	**1.0**		**Gas pressure switch - offset upper limit:** This works in the same way as Option 136 but checks the upper limits. This is an offset from the commissioned value. Note settings of Options 124/131.
		0.1 - 5	"wg/ 0.2 - 12.4 mBar/ PSI not available (Sensor MM60006)
		0.4 - 25.2	"wg/ 1.1 - 63mBar/ 0.02 - 0.91 PSI (Sensor MM60008)
		1 - 56	"wg/ 2.5 - 140mBar/ 0.04 - 2.03 PSI (Sensor MM60011)
		1.9 - 103	"wg/ 4.6 - 356 mBar/ 0.07 - 5.16 PSI (Sensor MM60012)
138	**0**		**Oil pressure units:**
		0	Bar.
		1	PSI.
139	**1.0**		**Oil pressure switch - offset lower limit:** This only checks the oil pressure lower limit during firing. This is an offset from the commissioned value.
		0	Off - lower limit not checked.
		0.8 - 4	Bar - lower limit from operating pressure.
		0 - 50	PSI - lower limit from operating pressure.
140	**1.0**		**Oil pressure switch - offset upper limit:** This only checks the oil pressure upper limit during firing. This is an offset from the commissioned value.
		0	Off - upper limit not checked.
		0.8 - 4	Bar - upper limit from operating pressure.
		0 - 50	PSI - upper limit from operating pressure.

Option No.	Factory Setting	Option Value	Description
141	**0**		**Purge air pressure proving:** During pre purge this Option enables the air proving pressure to be tested at a value independent of Option 149. Option 148 must be set.
		0	Off - no purge air pressure proving.
		0 - 26.9	"wg.
		0.1 - 67	mBar.
			Note: *If Option 141 is set without Option 148 a lockout will occur when the system starts to purge. The lockout message displayed warns that Option 141 is incorrectly set.*
142	**0**		**Unused.**
143	**0**		**Pre purge:**
		0	Enabled.
		1	Disabled.
144	**0**		**Unused.**
145	**0**		**Autoflame air pressure sensor:**
		0	Autoflame air pressure sensor not optioned.
		1	Autoflame air pressure sensor optioned 0 - 1 PSI. (Sensor MM60005)
		2	Autoflame air pressure sensor optioned 0 - 2 PSI. (Sensor MM60013)
146	**0**		**Air pressure units:**
		0	"wg.
		1	mBar.
147	**0**		**Air sensor error checking window:** Only active during modulation (error 82). The burner will shut down if outside the window.
		0	No error checking.
		0 - 5.08	"wg (maximum = +/- 3 "wg).
		0 - 12.65	mBar (maximum = +/- 7.5 mBar).
148	**0**		**Autoflame air proving selected:**
		0	Not used - Requires external air proving switch on Terminal 54 (applies to all 4 fuels).
		1	Air proving - Requires Autoflame air pressure sensor, no input on Terminal 54.
		2	Air proving - Requires Autoflame air pressure sensor and input on Terminal 54.
149	**0.39**		**Minimum air pressure proving value:** Air pressure switch function.
		0.3 - 4.99	"wg.
		0.75 - 12.42	mBar.

Option No.	Factory Setting	Option Value	Description
150	**0**		**Clear ALL commissioning data and gas/air sensor re-commission:**
		5	Clear commissioning data - Restore Options/Parameters to factory settings.
		7	Air sensor automatic re-commission (see Section 2.17.10.8).
		8	Gas sensor automatic re-commission (see Section 2.17.10.9).
			For safety reasons, Options, 110 - 150 also have to be entered in as Parameters. It is the responsibility of the commissioning engineer to ensure that all settings are set in accordance with the appropriate standards, local codes and practices e.t.c..

2.17.2.4 Parameters

Note: The Options and Parameters must only be changed by factory trained and certified technicians who have a thorough appreciation of the Autoflame combustion systems and the combustion process in general. Any person changing the Options and Parameters who does not have the correct factory training and understanding of these settings/adjustments may place themselves and others in a potentially dangerous situation.

N.B. The E.G.A. related parameters have the factory default settings from years of testing on many fuels and applications. It is advised to be cautious when changing these parameters, and is recommended not to do so.

Please refer to Section 2.17.2.3 (Options) for instructions on accessing and changing Parameters.

Parameter No.	Factory Setting	Parameter Value	Description
1	**3**	0 - 20	**Sequencing:** Offset value when unit goes offline. If the standby boiler fails to start the scan time will be decreased by the value set (minutes). i.e. Scan time is 10 minutes and value is 3 then the next scan time will be reduced to 7 minutes when the standby boiler fails to start.
2	**1**	1 - 10	**Sequencing:** Time between data requests (seconds). Bus driver requests information every 'n' seconds, MM's transmits every 'n' seconds, the DTI only listens to transmissions.
3	**1**	1 - 10	**Sequencing:** Number of boilers initally set on after powerdown.
4	**45**	5 - 100	**EGA:** Number of seconds 'ENTER' button is disabled after 'EGA' button is pressed during commissioning and single point change.
5	**4**	1 - 50	**Sequencing:** Modulation time out (minutes). i.e. If the boiler is not modulating after being asked to contribute to the load after this time it is kicked out of the sequence loop. E.g. Burner must start to modulate in 4 minutes from being asked to contribute to the load.
6	**60**		**Unused.**
7	**16**		**Unused.**
8	**30**	5 - 240	**EGA:** Delay after draining before trim cycle starts (washout peroid). When the EGA drains and the cells are cleaned with air this value manitains the EGA readings from before the drain peroid for 'n' seconds to allow the air to clear from the EGA.
9	**60**	5 - 240	**EGA:** Auto commission time (seconds). How long the air rich and fuel rich positions are held during commissioning.
10	**0**		**EGA:** Version
		0	Mk6 EGA.
		1	Mk7 EGA.
11	**15**	5 - 60	**EGA:** Air flush time. This is the flush out period between going air rich and fuel rich during
12	**0**		**EGA:** CO included in trim caculation on fuel 2 & 3. (see Option 17). Required when using natural gas on fuel 2 & 3.
		0	No.
		1	Yes.
13	**20**	5 - 30	**EGA:** ÷4 = % of air damper movement. Amount of auto commission trim. Applies only to fuel rich cycle. (negative trim)
14	**20**	1 - 200	**EGA:** ÷2, number of degrees the fuel valve moves before negative trim is reset.
15	**5**	2 - 100	**Golden start timer:** Number of seconds that the postioning motors are held at the golden start (choke) position. See Option 29. This time starts from the ignition point.
16	**12**	1 - 50	**EGA:** ÷2 (hours). Time between calibrations if the burner does not switch off. E.g. Every 6 hours the EGA will calibrate its cells if the burner does not turn off.

Parameter No.	Factory Setting	Parameter Value	Description
17	**3**	0 - 10	**EGA:** Number of trims before before an EGA error is flagged when combustion limits are exceeded. Each trim = Paramter 25 (seconds)
18	**20**	5 - 60	**EGA:** ÷ 2 = % of trim. Trim amount during run. This value cannot be set above 20 (10%) or an error 25 will occur.
19	**20**	0 - 20	**EGA:** ÷4 = % of air damper movement. Amount of auto commission trim. Applies only to air rich cycle (positive trim).
20	**0**	0 - 40	**Reset parameters to orginal factory settings:**
		26	Reset Parameters
21	**0**		**Unused.**
22	**0**		**DTI: Do not adjust.**
23	**0**		**EGA:** Trim add air when CO present. When trim is taking place, if the O2 and CO2 appear on the air rich side but the CO appears on the fuel rich side then the air damper will open further to remove CO.
		0	Enabled.
		1	Disabled.
24	**120**	20 - 240	**EGA:** Calibration time (seconds).
25	**30**	5 - 100	**EGA:** Time between each sample (trim).
26	**8**	1 - 50	**EGA:** Number of samples (trims) between each trim cycle.
27	**25**	0 - 255	**EGA:** Minimum operating temperature (÷ 5=Deg C)
28	**200**	0 - 255	**EGA:** Maximum operating temperature (÷ 5=Deg C)
29	**0**		**Unused.**
30	**10**	0 - 40	**Filters load sensor readings:** Temperature and pressure detectors.
		0	No filtering
		20	Maximum filtering
31	**0**		**Selects efficiency to be displayed:**
		0	English (USA/Canada - incorporates Hydrogen & moisture loss)
		1	European.
32	**0**		**Unused.**
33	**0**		**Unused.**
34	**0**		**Unused.**
35	**2**	0 - 10	**O2 change to detect residence time:**
36	**5**		**Unused.**

Parameter No.	Factory Setting	Parameter Value	Description
37	**20**		**Unused.**
38		0 - 255	**MM password:** Channel 1.
39		0 - 255	**MM password:** Channel 2.
40	**10**		**Unused.**
41	**5**		**Unused.**
42	**4**		**Unused.**
43	**7**		**Unused.**
44	**4**	0 - 40	**O2 window inside which no trim takes place:** ÷10 = %
45	**2**	0 - 20	**CO2 window inside which no trim takes place:** ÷10 = %
46	**21**		**Unused.**
47	**0**		**Unused.**
48	**0.8**	0 - 99	**Integral control threshold (I):** This is a percentage below the required setpoint to the proportional band offset at which point the integral control takes effect. E.g. If the required setpoint is 100 PSI, Option 6 = 10 PSI, Parameter 48 = 0.8, the intergral control will take effect when the actual value is above 92 PSI.
49	**0**		**Required setpoint:** This is important if using Parameter 72.
		0	Stored permanently in memory
		1	Not stored permanently in memory.
50	**0**		**Unused.**
51	**0**		**Unused.**
52	**0**	0 - 2	**External load detector:** Number of decimal points (see table below).
53	**0**	0 - 9990	**External load detector:** Maximum value (see table below).
54	**0**	0 - 100	**External load detector:** Maximum voltage (see table below).
55	**0**	0 - 9990	**External load detector:** Minimum value (see table below).
56	**0**	0 - 100	**External load detector:** Minimum voltage (see table below).

Example 1: **Pressure** application		Example 2: **Temperature** application	
Required/Actual Range -	0.0 – 100.0 Bar	Required/Actual Range -	1000 – 2000 F
Input Signal -	0 – 10 Volts	Input Signal -	1 – 6 Volts
Option 1 -	11	Option 1 -	10
Option 65 -	2	Option 65 -	1
Parameter 52 -	1	Parameter 52 -	0
Parameter 53 -	1000	Parameter 53 -	2000
Parameter 54 -	10.0	Parameter 54 -	6.0
Parameter 55 -	0	Parameter 55 -	1000
Parameter 56 -	0.0	Parameter 56 -	1.0

Parameter No.	Factory Setting	Parameter Value	Description
57	**0**	0 - 10	**Sequencing:** Highest MM ID. This parameter speeds up communications between MM's when sequencing.
58	**1**	0 - 1	**EGA:** Cailbration on startup
		0	Enabled
		1	Disabled
59	**0**		**Unused.**
60	**0**		**EGA or O2 trim interface module:**
		0	Normal EGA operation
		1	O2 trim interface operation
61	**900**	0 - 999	**Display backlight on time (seconds):** Set to zero for the backlight to stay on at all times.
62	**0**	0 - 1	**Hot water sequencing:** If this Parameter is set to 1 then the hot water sequencing will operate in the same way as the steam sequencing (contact Autoflame before use).
63	**0**	0 - 1	**Reset burner history:** set to 1 for 2 seconds, then set back to 0 to clear lockout history.
64	**0**	0 - 1	**Reset totalised fuel flow metering:** Set to 1 for 2 seconds then set back to 0 to reset fuel flow metering values for all 4 fuels For indivdual fuels see Option 57.
65	**0**	0 - 1	**Reset burner history:** Set to 1 for 2 seconds, then set back to 0 to reset burner history, hours run and number of start ups.
66	**0**		**Unused.**
67	**0**		**Unused.**
68			**Unused.**
69	**0**		**External modulation input range:**
		0	0 - 20mA, 0 - 10V.
		1	4 - 20mA, 2 - 10V.
70	**0**	0 - 20	**Filtering of the analogue input:** Terminals 7/8/9. The value set is the number of readings over which an avergae is taken. The smaller the setting the quicker the response time.
		0	Default value of 5.
		1	Minimum.
		20	Maximum.
71	**0**	0 - 20	**Resolution of the analogue input:** Terminals 7/8/9. The effect of resolution is to filter the noise on the input which causes hunting as the MM resonds to a changing signal.
		0	Default value of 5.
		1	Minimum.
		2	Maximum.

Parameter No.	Factory Setting	Parameter Value	Description
72	**0**		**External required setpoint:** If this Parameter is enabled, the analogue input Terminals 7/8/9 are used to set the required setpoint. Input signals can be 0 - 10/ 2 -10V or 0-20/ 4 - 20mA. (see Parameters 69/70/71). The range of the required setpoint is set by Options 30 & 31. Set Parameter 49 to 1 and set Option 16 to 2.
		0	Disabled .
		1	Enabled.
73	**0**		**Unused.**
74	**1**		**Trim method:** Changes the method of trim from the normal angular degrees trim to a trim that works on the area that is open on the damper blades to allow air through.
		0	Angular degrees trim.
		1	Area trim
			Note: *Parameter 74 needs to be set to 1 to use the Quick Trim function.*
75	**0**		**Unused.**
76	**0**		**Unused.**
77	**0**		**Unused.**
78	**0**		**Unused.**
79	**0**		**EGA splitter for twin burner application:** When using a twin burner it is possible to use the EGA data from the master MM module for the slave MM module. This means only one EGA is required. This only works with Option 14 = 1 on both units Parmeter 79 = 1 on the slave and Parameter 79 = 0 on the master.
		0	Slave or inactive.
		1	Master.
80	**40**		**Unused.**
81	**0**		**Unused.**
82	**0**		**Unused.**
83	**0**		**Display diagnostic values:**
		0	Disabled.
		1	Enabled.
84	**0**		**Display diagnostic values for IBS.**
		0	Disabled.
		1	Enabled
85	**0**	0 - 250	**Modulation exerciser:** Repeatedly run between high and low flame. The higher the value, the longer high/low flame position is held for.
86	**0**	0 - 99	**IBS change down threshold:** If left at 0 change down threshold is 85% firing rate.

Parameter No.	Factory Setting	Parameter Value	Description
87	**0**	0 - 100	**IBS change up threshold:** If left at 0 change up threshold is 95% firing rate.
			Note: *If Parameter 86 is set greater than Parameter 87 then they will default to 85% to 95% respectively.*
88	**0**	-50 - +50	**Adjust errors in the OTC sensor reading:** If the actual reading is too high set a negative value to adjust, if the reading is too low set a positive value.
		0	No adjustment made.
		Each unit	1 F or 0.5 C (Set in Option 65).
89			**Unused.**
90	**0**		**Flue gas recirculation:**
		0	Positions entered after commissioning by performing single point change (see Section 2.17.7.11).
		1	Positions entered during commissioning.
91			**Unused.**
92	**0**		**Boiler differential pressure proving:**
		0	Disabled.
		1	Enabled. The system will be held in a purge condition until a proven input from a differential pressure switch is registered on Terminal 85. Terminal 85 must be reset before start up can take place . If Terminal 85 resets during purge, the system returns to the beginning of the start up sequence.
		2	Enabled. Same as 1 but if Terminal 85 resets during purge then a lockout will occur.
			Note: *If Enabled a flame switch cannot be used.*
93	**0**		**Unused.**
94	**0**		**Upper offset limit ppm NO:**
		0 - 200	ppm NO.
95	**0**		**Unused.**
96	**0**		**Upper offset limit exhaust temperature:**
		0 - 999	Centrigrade/Farenheit
97	**0**		**Absolute limit exhaust temperature:** System checks for exhaust temperature readings higher than the value specfied in this Parameter.
		0 - 999	Centrigrade/Farenheit
98			**Unused.**
99			**Unused.**
100	**0**		**Assured low fire shut off:**
		0	Disabled
		1	Burner modulates to low fire before turning off when above internal stat.

Parameter No.	Factory Setting	Parameter Value	Description
101	**0**		**Shuffle sequencing:**
		0	Disabled
		1	Sequence order changed from DTI.
102	**0**		**Super "I" control offset:** The default value is zero which turns off the "Super I". The range can be up to 50 Centrigrade, Farenheit, PSI or 5 Bar.
		0	Not operational
		1	Operational
103	**0**		**Super "I" control speed of integration/time:**
		0 - 30	Seconds (1 second increments).
104	**0**		**Super "I" control amount of integration:**
		0 - 5	Degrees (0.1 degree increments).
105	**0**		**Super "I" control deadband:** The range of 10 would apply to 10 Centigrade/Farenheit/PSI or 1.0 Bar.
		0 - 10	Range (increments of 1).
106	**0**		**Integral control % (I):** Percent variation.
		1 - 25	Every "n" seconds (set in Option 7) 10% of the present offset from setpoint value is added or subtracted to the present proportional value. This enables a % variation
107		0 - 255	**Online changes password:** Channel 1.
108		0 - 255	**Online changes password:** Channel 2.
109	**0**	0 - 1	**Advanced water level adjusters:** If set to 1 this will give advanced access to the water level controls.
			NOTE: Parameters 110 - 150 are a repeat of their respective options. These values need to be entered as both an Option value and a Parameter value for safety reasons.

2.17.2.5 Setting Positioning Motors

Autoflame supply three standard sizes of positioning motors - small, large and industrial. All can be used for positioning fuel and air dampers.
Both types can be configured to drive clockwise or counter clockwise to open a valve or damper.
Servomotors can be installed in any orientation.

Layout of small positioning motor, refer to Section 2.17.2.5.2
Layout of large positioning motor, refer to Section 2.17.2.5.3
Layout of industrial positioning motor, refer to Section 2.17.2.5.4

Viewing the shaft end-on, from the potentiometer end, all positioning motors drive in a clockwise direction if power is applied between the LIVE and CW terminals, and counter clockwise if the power is applied between the LIVE and CCW terminal.

The operation of fuel valves and air dampers is often such that they open in a clockwise direction. If the operation needs to be reversed, it is necessary to swap various wiring connections between the M.M. and the positioning motor(s). An example of reversing the operation of a fuel valve is shown in Figure 2.17.2.5.4.i. Figure 2.17.2.5.4.ii shows the connections for normal operation.

Note: Servomotors are supplied by the factory set at a 0.0 position. Remember that this position may not necessarily automatically position the damper at 0.0 or a closed position. This must be physically checked. Failure to do so can result in serious injury or death.

2.17.2.5.1 Setup Procedure

Before a burner is fired it is essential to set up each Micro Modulation positioning motor.

A tamper proof screwdriver is required (these can be ordered from Autoflame).

Usually control valves/air dampers that the positioning motors drive, move through up to 90 angular degrees. The M.M. system has the ability to drive valves through 360 degrees, but the MM will only display from -6 to 96 degrees.

All Channel 1 to 4 readings displayed on the M.M. are in angular degrees. It is necessary to adjust the potentiometer in the positioning motor assembly so that the M.M. reads 0.0 when the relevant valve/damper is at its fully closed position. The technician must physically check the mechanical position of the dampers and valves, whilst all positioning motors are set to 0.0 before leaving the factory this may have changed during shipping. DO NOT ASSUME THEY HAVE BEEN PREVIOUSLY SET CORRECTLY.

To set up a positioning motor, first ensure option 12 is set to 0, (this prevents E.G.A. errors from allowing continuation). Put the M.M. into the commissioning mode so that the CLOSE indicator is steady and the ENTER indicator flashes (see Section 2.17.2.2). By doing this it is possible to position the valve/damper mechanically by using the appropriate up and down buttons.

****WARNING** Electrical Connections are live/hot and mis-application may result in serious physical injury or death.**

Remove the positioning motor cover.

For air positioning motor(s) carry out the following procedure:

Use the up/down buttons for the relevant air damper to position the air damper to its physically closed position. Loosen the two tamper proof screws just sufficiently to enable the potentiometer to rotate. Rotate the potentiometer clockwise or counter clockwise until the relevant channel reads 0.0. Tighten the two tamper proof screws gently until the potentiometer is secure. Do not over tighten the screws. Check that the display still reads 0.0. If incorrect repeat the adjustment process.

For fuel positioning motor(s) carry out the following procedure:

On Autoflame gas, oil and gas/oil combination valves it is necessary to remove the positioning motor. Manually position the oil/gas valve slot to its closed position. Observe the position of the drive pin on the positioning motor. Use the relevant up/down buttons to position the pin so that when the positioning motor is reassembled to the valve it is in line with the slot. Reassemble the positioning motor to the valve, loosen the two tamper proof screws and proceed to adjust the potentiometer position until 0.0 is displayed. Use the external position indicator to ensure the valve is in the fully closed position.

In applications where the servomotor is not positioned close to the display then it is possible to measure the feedback voltage from the servomotor in order to ensure that 0.0 degrees is displayed. By testing the DC voltage between the blue and green wires (wiper and 0V) on the servomotor low voltage terminals this will read 0.21V DC when the reading on the display is 0.0 degrees. The same can be done for when the servomotor is at 90.0 degrees where the voltage will be 3.6V.

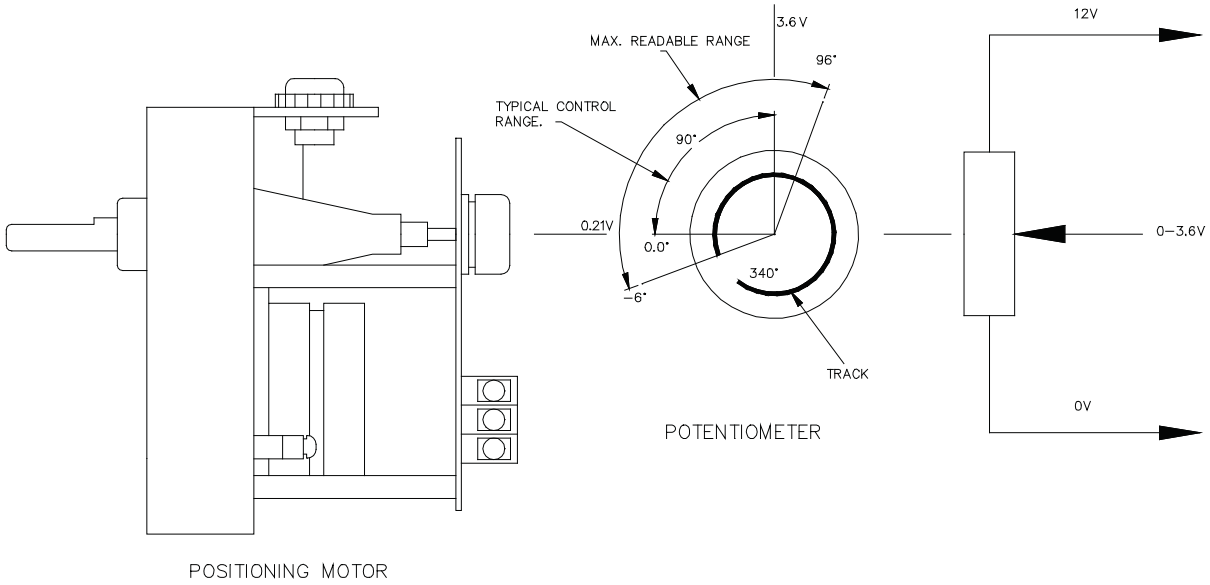

Figure 2.17.2.5.1.i Positioning Motor

Important Note for Autoflame Valves

On threaded valves, the pin on the top of the valve is 90 degrees opposite from the position of the butterfly valve.

On flanged valves, the pin on the top of the valve is in line with the position of the butterfly valve.

For both valves the external visual position indicator is in line with the position of the butterfly valve. Regardless of the type of valve being used, the servomotor is dispatched from the factory with the potentiometer in the zero position. The same servomotor will be correct for both types of valve, as the servomotor for the threaded valve is mounted at 90 degrees different from the flanged valve.

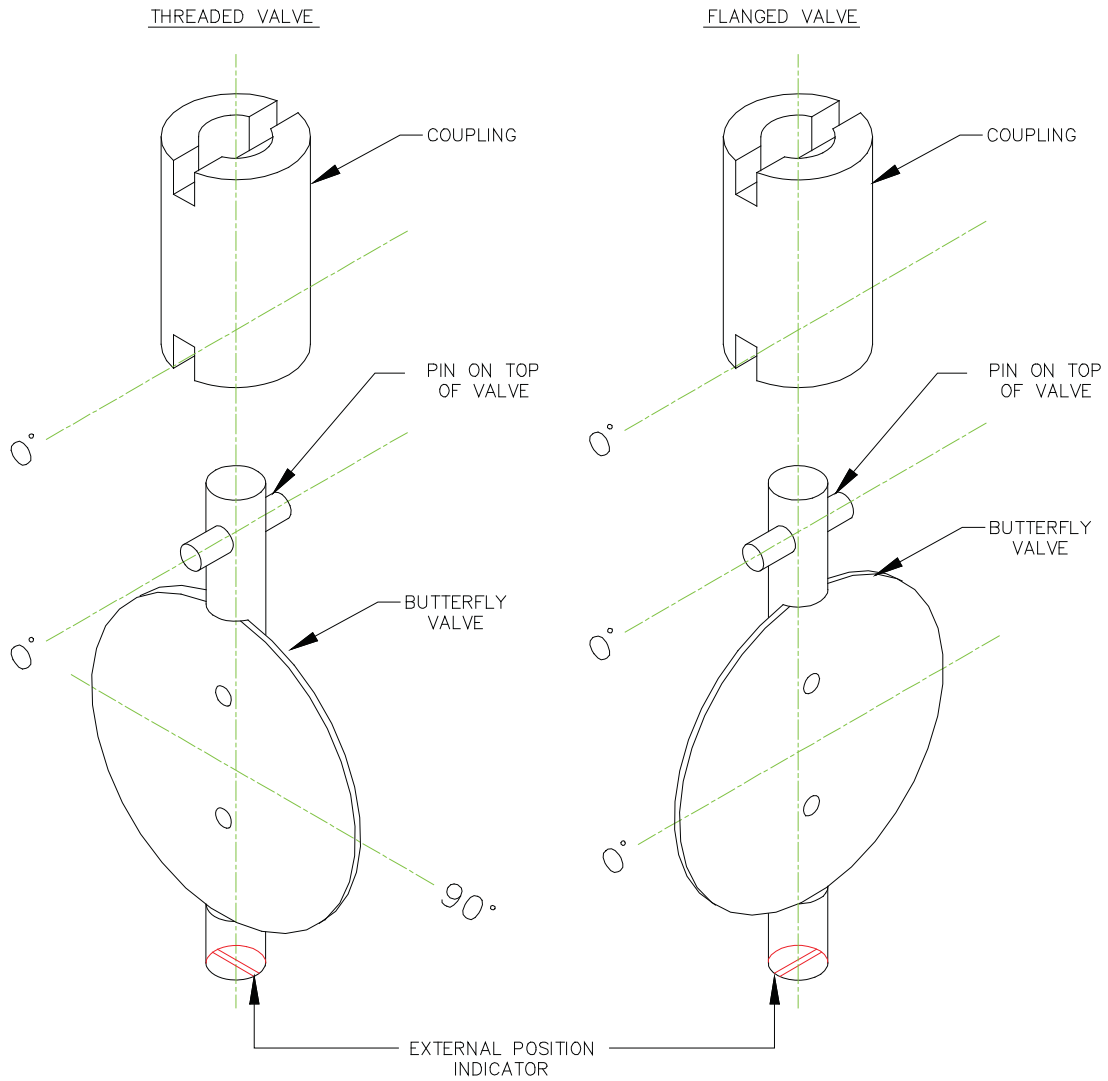

Figure 2.17.2.5.1.ii Valve Pin Positions

2.17.2.5.2 Small Positioning Motor

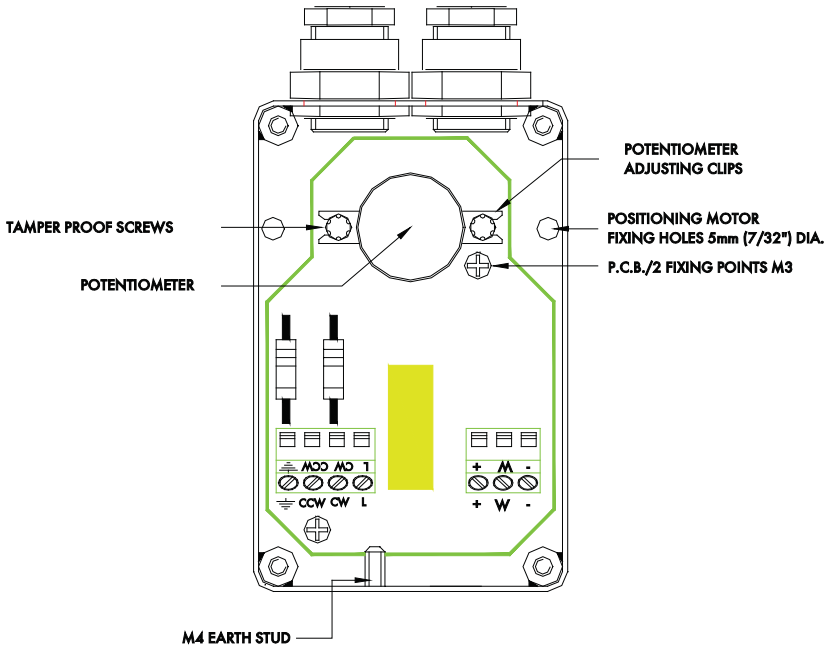

Figure 2.17.2.5.2 Small Positioning Motor

2.17.2.5.3 Large Positioning Motor

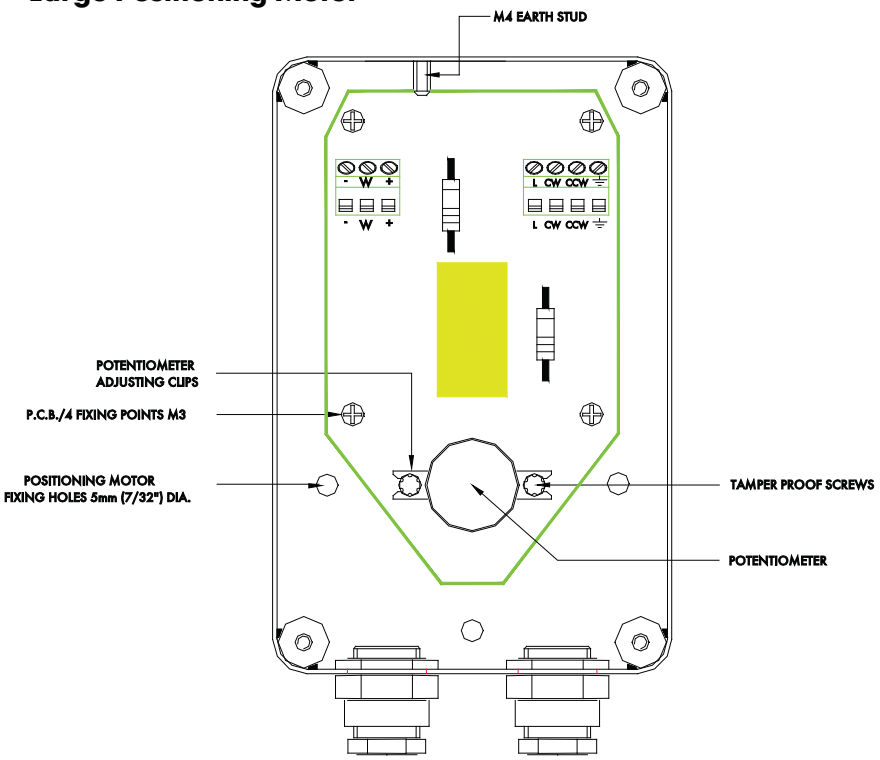

Figure 2.17.2.5.3 Large Positioning Motor

The servomotors shown are 230V in which the low voltage cables and mains voltage cables must enter the servomotor through separate glands. For the 24V servomotors only one gland is required for both the low voltage cables and mains voltage cables.

2.17.2.5.4 Industrial Servomotor

No	Name
1	Body
2	Autoflame feedback potentiometer
3	Drive unit cover
4	Power instruments cover
5	Control unit/terminal strip cover
6	Output shaft
7	Manual handle shaft
8	Cord lock for conduit connection

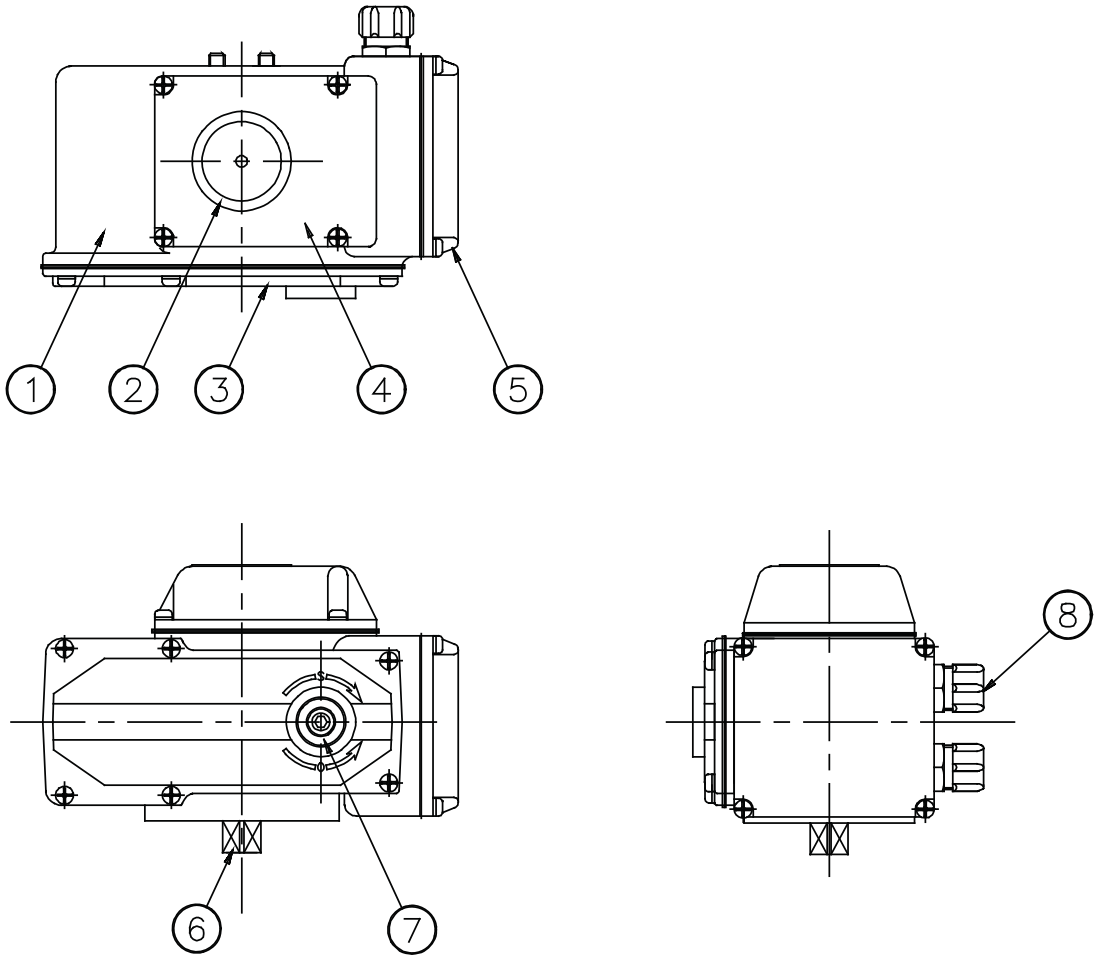

Figure 2.17.2.5.4 Industrial Servomotor

2.17.2.5.5 Positioning Motors Direction Change

For illustration purposes fuel motor connections are shown

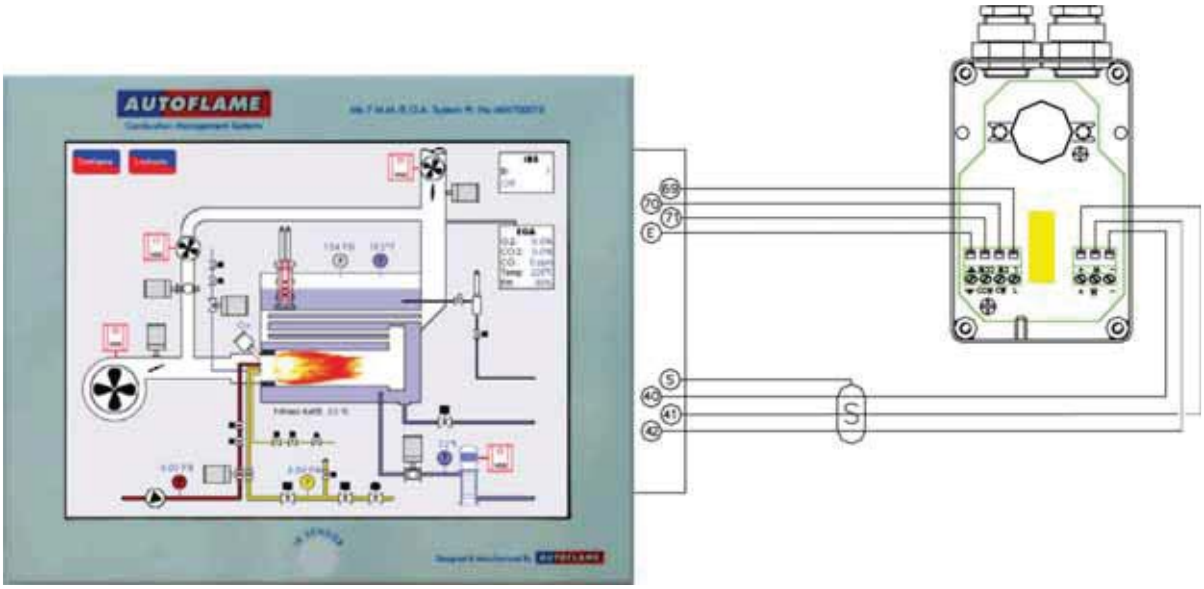

Figure 2.17.2.5.5.i Motor Clockwise Rotation

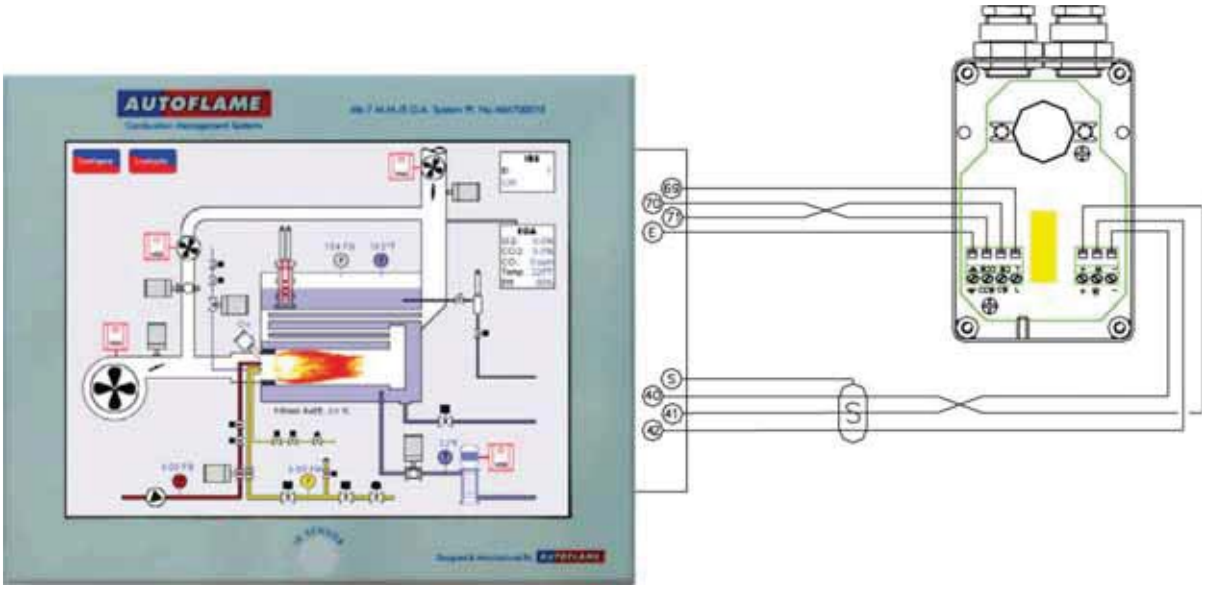

Figure 2.17.2.5.5.ii Motor Anti-Clockwise Rotation

2.17.2.5.6 Replacing the Servomotor

Anytime that a servomotor is changed in the field it is important to verify that the physical position of the fuel valve, air damper, FGR valve or other damper is correct in accordance with the potentiometer feed back as displayed on the Autoflame controller. When the valve is completely closed as indicated on the valve/damper then the potentiometer reads zero angular degrees on the M.M. display. It must not be assumed that the original commissioning engineer has the servomotor set in the correct position.

Note: Once the servomotor has been changed it is imperative to check the combustion performance throughout the firing range in a safe and reliable manner, based on the original data. If the combustion performance is different, a re-commission is required or single point changes to the fuel/air ratio.

2.17.2.5.7 Servicing the Servomotor

It is good practice to periodically (minimum once a year) check the equipment - most notably the following for the servomotors:

1. Overall mechanical soundness, i.e. look for corrosion or mechanical damage.
2. Coupling and associated linkage is tight.
3. Ensure any associated set screws and fixings are secure.
4. Mechanical pins. I.e. roll pins/split pins do not show any signs of corrosion and do not show indication of fatigue.
5. When the burner is off and the power has been securely isolated, remove the servomotor from the damper/valve, and ensure that the damper/valve does not require excessive torque to operate. Make sure that the servomotor is working within its recommended torque rating.
6. Do not stand on the servomotors as this may cause internal damage to the PCB potentiometer leading to a system failure.
7. Do not remove the PCB inside the servomotor as this will affect the integrity of the repeatability and void any warranty that may apply.

2.17.2.5.8 Servomotor Torque Ratings

Servomotor	Part Number	Rating	
Small servomotor	(MM10005)	3 ftlbs	(4Nm)
Large servomotor	(MM10004)	18 ftlbs	(25Nm)
Industrial servomotor 5	(MM10070)	37 ftlbs	(40Nm)
Industrial servomotor 10	(MM10072)	72 ftlbs	(98Nm)
Industrial servomotor 20	(MM10074)	148 ftlbs	(200Nm)
Industrial servomotor 40	(MM10078)	295 ftlbs	(400Nm)

2.17.2.6 Valve Proving

2.17.2.6.1 Explanation of Gas Valve Proving

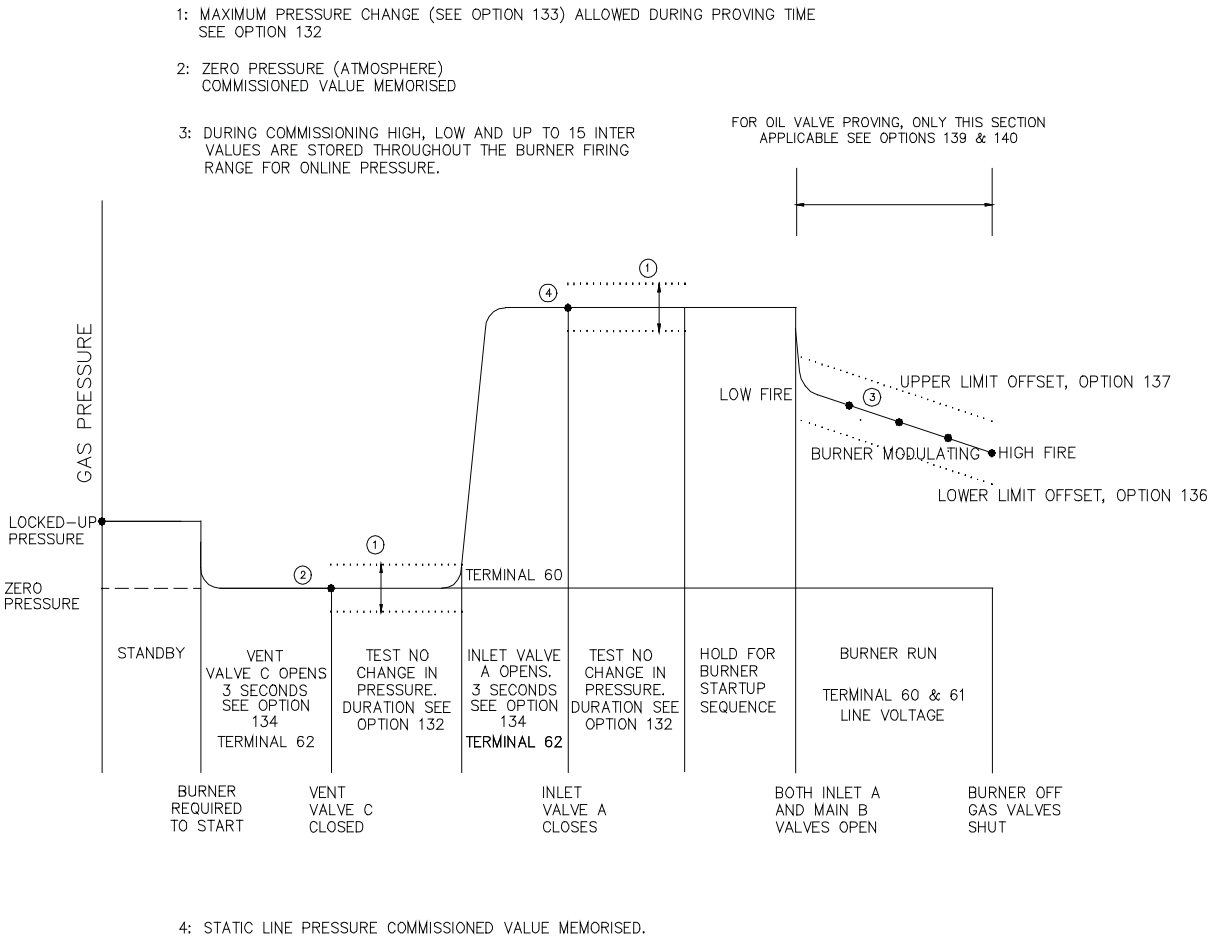

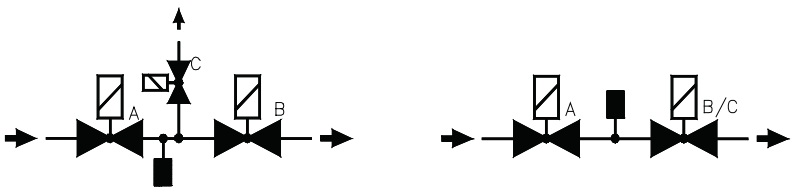

3 VALVE PROVING
A – T60, B – T61, C – T62

2 VALVE PROVING
A – T60, B/C – T61

2.17.2.6.2 Gas Pressure Sensors

Part Number	Operational Range		
MM60006	12.5 – 65 mbar	0.18 – 1 psi	5 – 25 "wg
MM60008	52 – 340 mbar	0.75 – 5 psi	25 – 135 "wg
MM60011	115 – 750 mbar	1.8 – 11 psi	50 – 300 "wg
MM60012	207 – 1380 mbar	3 – 20 psi	83 – 550 "wg
MM60014	0.4 – 4 bar	6 – 60 psi	162 – 1620 "wg

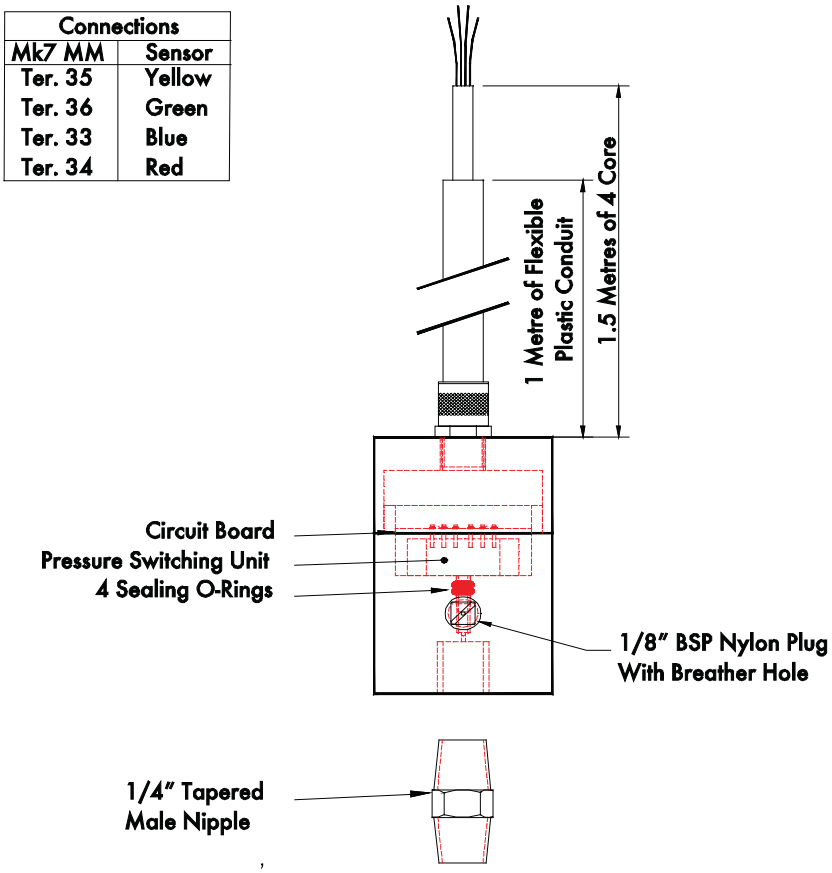

Notes

IP	52
NEMA	5
Housing & Lid	Aluminium
Power Consumption	0.1 Watts
Mounting	Vertical as shown. Breather holes away from any water source.

	Actual Operating Range											
	mbar				"wg				PSI			
	min	max	†	zero range	min	max	†	zero range	min	max	†	zero range
MM60006	12.5	65	1373.8	-2.5 to 1.25	5	25	554	-1.0 to 0.5	0.18	1	20	-0.04 to 0.02
MM60008	52	340	1373.8	-12.5 to 6.25	25	135	554	-5.0 to 2.5	0.75	5	20	-0.2 to 0.1
MM60011	115	750	2060.7	-30 to 15	50	300	831	-12.0 to 6.0	1.8	11	30	-0.44 to 0.22
MM60012	207	1380	4121.4	-55 to 27.5	83	550	1662	-22.0 to 11.0	3	20	60	-0.8 to 0.4
MM60014	400	4000	12412	-166 to 82	162	1620	4964	-67.0 to 32.0	6	60	180	-2.4 to 1.2

† maximum pressure above which causes permanent sensor failure

2.17.2.6.3 Oil Pressure Sensor

PRESSURE SENSOR ELECTRICAL CONNECTIONS

SENSOR TYPE	MM UNIT
PLUG SENSOR	MK7
GREEN (2)	35
BLUE (3)	33
RED (1)	34
NOT CONNECTED	S

NOTE: EARTH PIN IS SLIGHTLY LARGER TO ENSURE CORRECT CONNECTION DO NOT FORCE.

ELECTRICAL CONNECTION
Shown from behind.

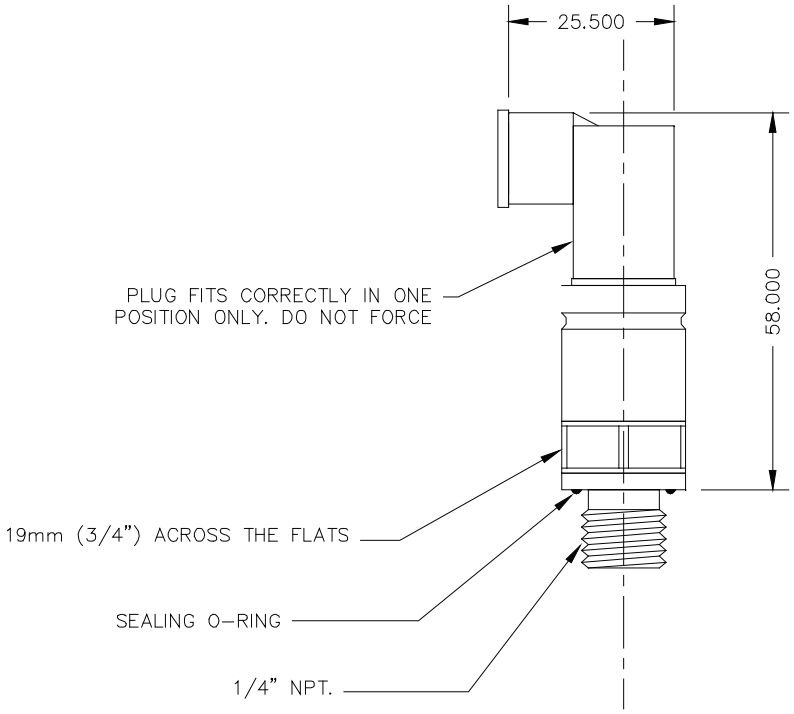

NOTE:

MAXIMUM 2.5mm FLAT BLADE SCREW DRIVER FOR ELECTRICAL CONNECTIONS
I.P. 65
NEMA 4

TORQUE SETTING	MAX. 25Nm

DO NOT USE CASE TO TIGHTEN PRESSURE CONNECTION.

O-RING MATERIAL	VITON
MAX. STORAGE TEMPERATURE	-25 TO +85 DEG. C (-13 TO 185 DEG. F)
MAX. OPERATING TEMPERATURE	-25 TO +85 DEG. C (-13 TO 185 DEG. F)
MEDIA TEMPERAURE	-25 TO +125 DEG. C (-13 TO 257 DEG. F)
OPERATING RANGE	0 TO 600 PSI / 0 TO 40 BAR
OVER PRESSURE RATING	1160 PSI / 80 BAR
BURST PRESSURE RATING	4350 PSI / 290 BAR

2.17.2.6.4 Commissioning Valve Proving

If the Valve Proving System (VPS) facility is to be utilised then specific options/parameters must be set (refer to section 2.17.2.3 and 2.17.2.4. Both Option and Parameters 110 – 150 must be set to the same value for safety reasons.

Options/Parameter125 through 128 set VPS operation depending on the fuel selected, i.e. Fuels 1,2,3,4.

125 - VPS operational on Fuel 1 (set value = 1).
126 - VPS operational on Fuel 2 (set value = 1).
127 - VPS operational on Fuel 3 (set value = 1).
128 - VPS operational on Fuel 4 (set value = 1).

The following options must be set to configure the VPS operation.

124 - Gas pressure range (pressure sensor type).
130 - Valve proving arrangement (two/three valves).
131 - Gas pressure units ("wg/mBar/psi).
132 - Valve proving time.
133 - Pressure change allowed during proving time.

IT IS THE RESPONSIBILITY OF THE COMMISSIONING ENGINEERS TO ENSURE THAT THE RELEVANT VALVE PROVING SYSTEM STANDARDS ARE ADHERED TO.

The following formulae may be used for calculating the proving time and pressure change allowed. They are based on DVGW requirements of a leakage rate of 0.1% of the maximum volume flow.

Proving time:

Abbreviations:

- Vpt - Valve proving time in seconds.
- Ip - Inlet pressure in millibars.
- Pv - Pipe volume in litres (volume = πr^2 x length).
- Mtp - Maximum gas throughput in litres per hour.

Formula:

$$Vpt = 4 \times \left[\left[\frac{Ip \times Pv}{Mtp \div 1000}\right] + 1\right]$$

The pipe volume is the total volume of any interconnecting pipe between the valve seals.

Pressure change:

Formula:

0.25 x Nominal inlet pressure (mBar)

Example:

Proving time:

Inlet pressure	= 50 mBar
Pipe volume	= 5 litres
Maximum gas throughput	= 100,000 litres per hour

$$Vpt = 4 \times \left[\left[\frac{50 \times 5}{100{,}000 \div 1000}\right] + 1\right]$$

Vpt = 14 Seconds

Set option 132 = 15 seconds.
Set parameter 132 = 15 seconds.

Note: option 132 is set in increments of 5 seconds, values must be rounded up.

Pressure change:

Inlet pressure = 100mBar.

0.25 x 100 = 25.0 mBar.

Set Option/Parameter 133 = 25.0 mBar

General Note

This is a metric formula, therefore imperial units must converted before applying this calculation.

To convert PSI to mBar multiply your PSI value by 68.94.
To convert Cubic feet to litres multiply your Cubic feet value by 28.31
To convert Cubic feet per hour to litres multiply your Cubic feet per hour value by 28.31

2.17.2.7 Air Pressure Proving

Combustion air pressure monitoring philosophy of the Mk7 system

PRESSURE SENSORS ARE DUAL CHANNEL & SELF CHECK

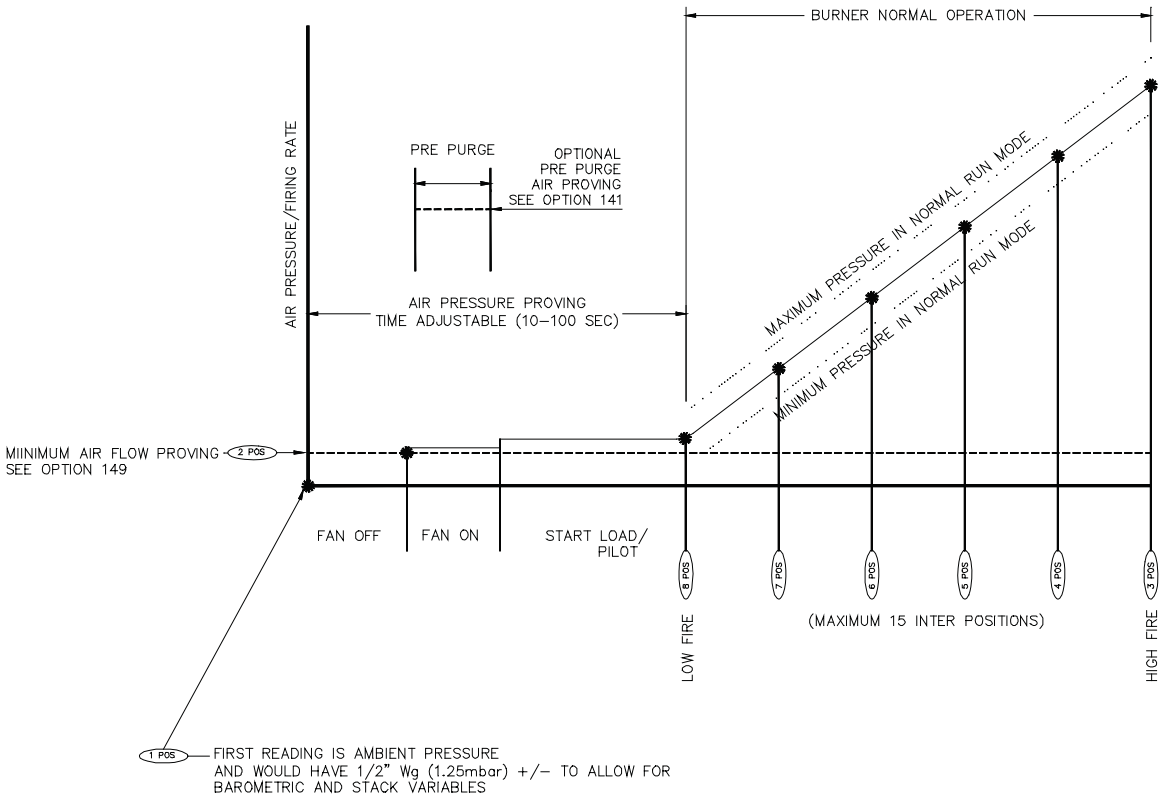

NOTE:
1: 'POS 8' MUST BE SET EQUAL TO 'POS 2' OR HIGHER
2: 'POS 2' MUST BE 0.25" Wg (0.62mbar) HIGHER THAN 'POS 1'
3: MINIMUM PRESSURE IN NORMAL RUN MODE MUST BE HIGHER THAN 'POS 2'
4: DEFAULT SETTINGS FOR MINIMUM & MAXIMUM IS 15% ABOVE & BELOW ENTERED VALUE

2.17.2.7.1 Air Pressure Sensor

Connections	
Mk7 MM	Sensor
Ter. 31	Yellow
Ter. 32	Green
Ter. 33	Blue
Ter. 34	Red

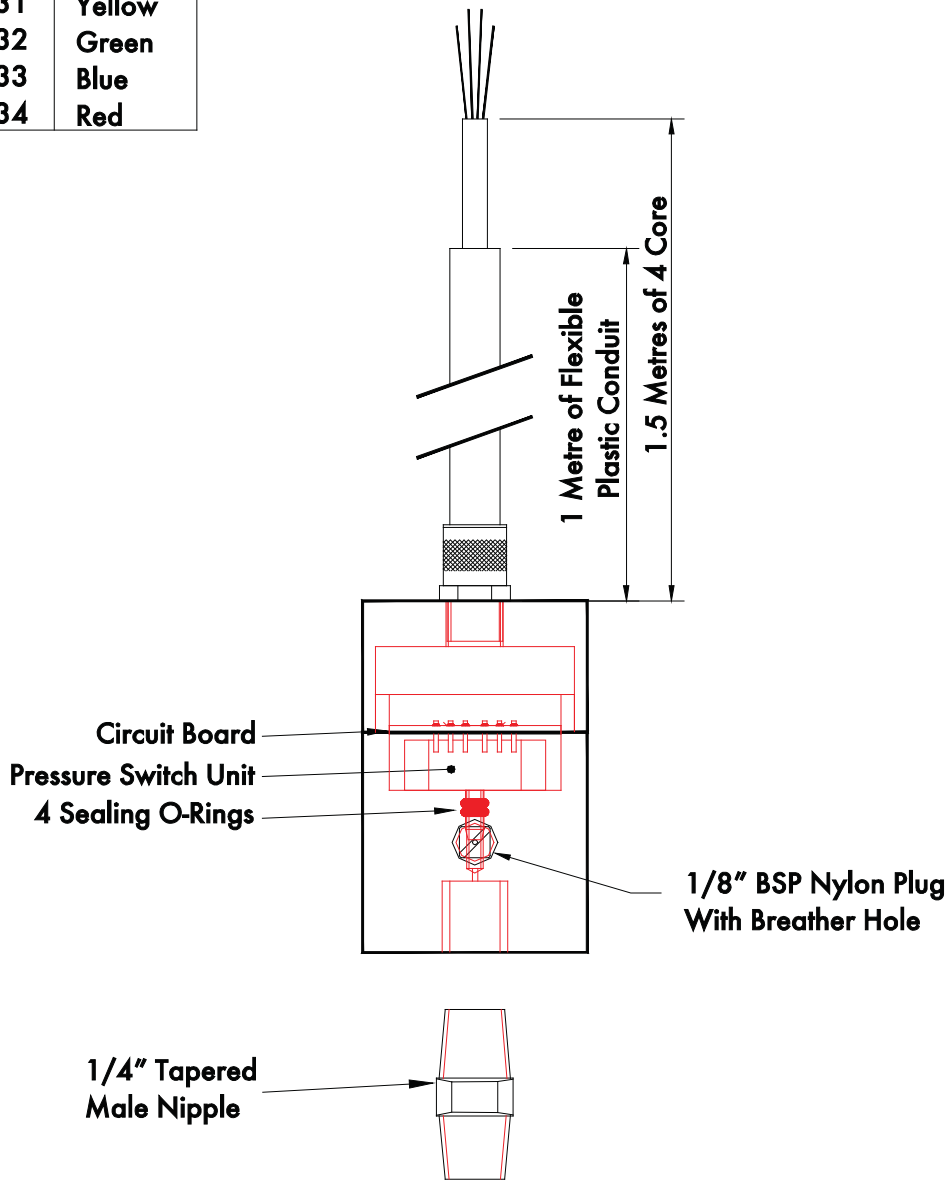

NOTE:

I.P. RATING	52
NEMA	5
MATERIAL SPECIFICATION	ALUMINIUM
POWER CONSUMPTION	0.1W
MOUNTING	VERTICAL AS SHOWN
WORKING RANGE	0.3 TO 25 " WG / -0.75 TO 65 MBAR (MM60005)
	0.6 TO 50 " WG / -1.5 TO 130 MBAR (MM60013)
ZERO RANGE	-1 TO 0.5 " WG / -2.5 TO 1.25 MBAR (MM60005)
	-2 TO 1" WG / -5 TO O2.5 MBAR (MM60013)

2.17.2.7.2 Air Pressure Tapped Fitting

The Autoflame Mk7 Air Pressure Sensor is supplied with a negative pressure port. This can be removed and installed as shown below, to measure a differential pressure. This is only necessary where the air pressure at low fire is below 0.4" w.g. or 1 mbar or when it is a local code requirement.

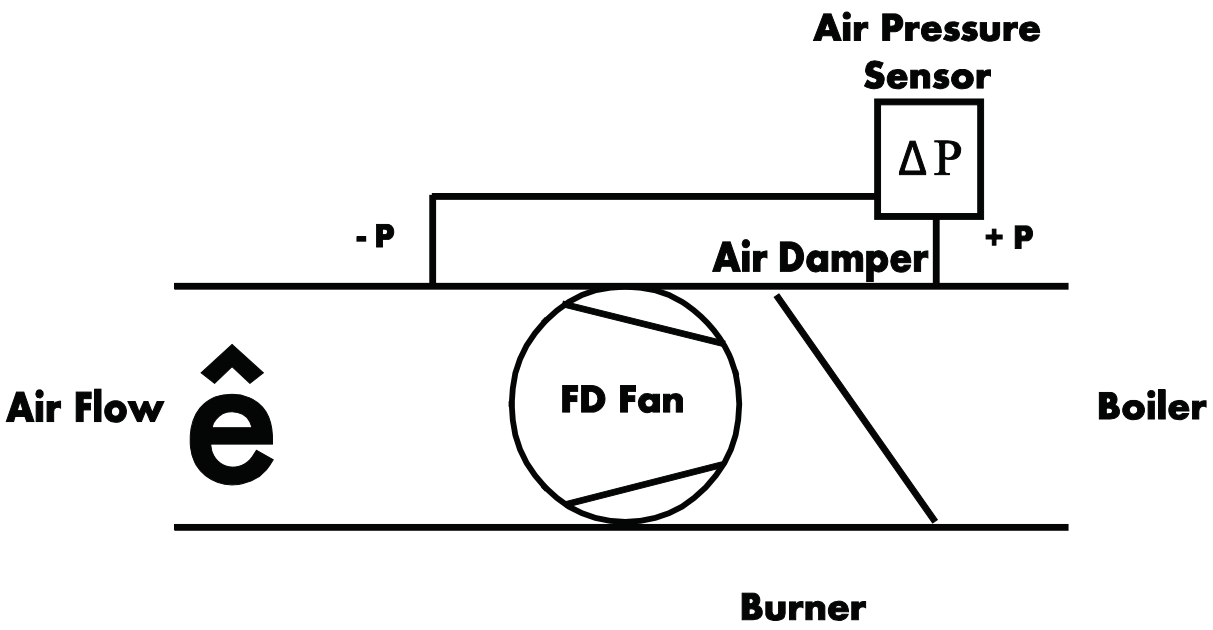

See Options 145 to 149

2.17.2.8 Steam Pressure Sensor

Part Numbers : MM10008/9/10/16

Electrical Connections		
Sensor Type		
Plug Sensor	Lead Sensor	Terminals
Green	Green	38
Blue	Yellow	37
Red	Brown	39
N/A	White	Unused
Not Connected	Screen	S

FOR CORRECT OPERATION THE DETECTOR MUST BE INSTALLED WITH A PRESSURE SIPHON LOOP. DO NOT INSTALL AN ISOLATION VALVE BETWEEN DETECTOR AND PRESSURE VESSEL

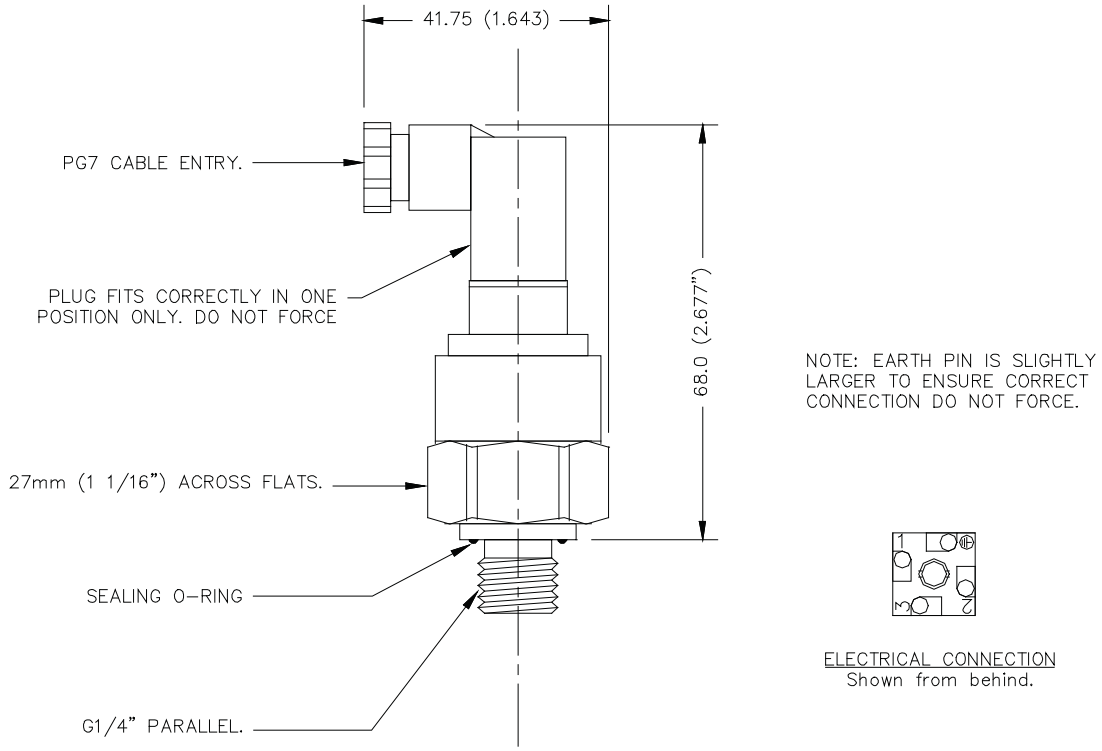

Figure 2.17.2.8 Steam Pressure Sensor

Maximum 2.5 mm Flat Blade Screwdriver for Electrical Connections

IP Rating	65
NEMA	4
Torque Setting	15-20 Nm

Do Not Use Case to Tighten Pressure Connection

O-Ring material	Viton
Max Storage Temp	-25 to +85 C
Max Operating Temp	-25 to +85 C
Media Temp (Steam)	-25 to +125 C

Part No.	Actual Range	Over Pressure	Burst Pressure
MM10010	3.0 - 55.0 PSI (0 - 3.80 Bar)	116 PSI (8 Bar)	174 PSI (12 Bar)
MM 10008	3.0 – 330 PSI (0 – 23.0 Bar)	725 PSI (50 Bar)	1087 PSI (75 Bar)
MM 10009	30 - 550 PSI (0 – 38.0 Bar)	1160 PSI (80 Bar)	1450 PSI (100 Bar)

2.17.2.9 Water Temperature Sensor

Part Number: MM10006

Electrical Connection	
Wire	Terminal
Red	38
Blue	37

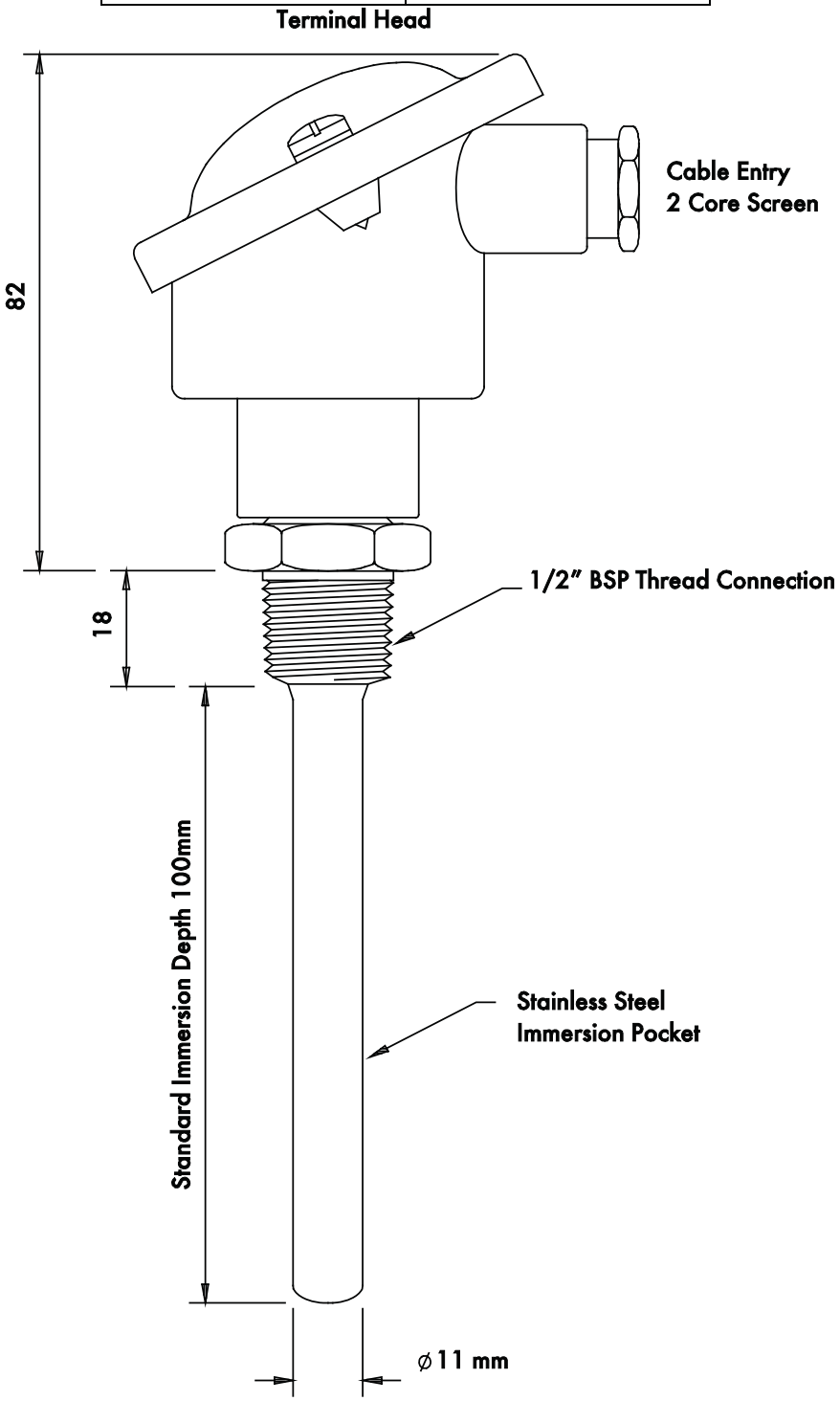

Figure2.17.2.9 Water Temperature Sensor

Range: 0 – 400°C, 0 - 752°F.

2.17.2.10 Outside Temperature Compensation

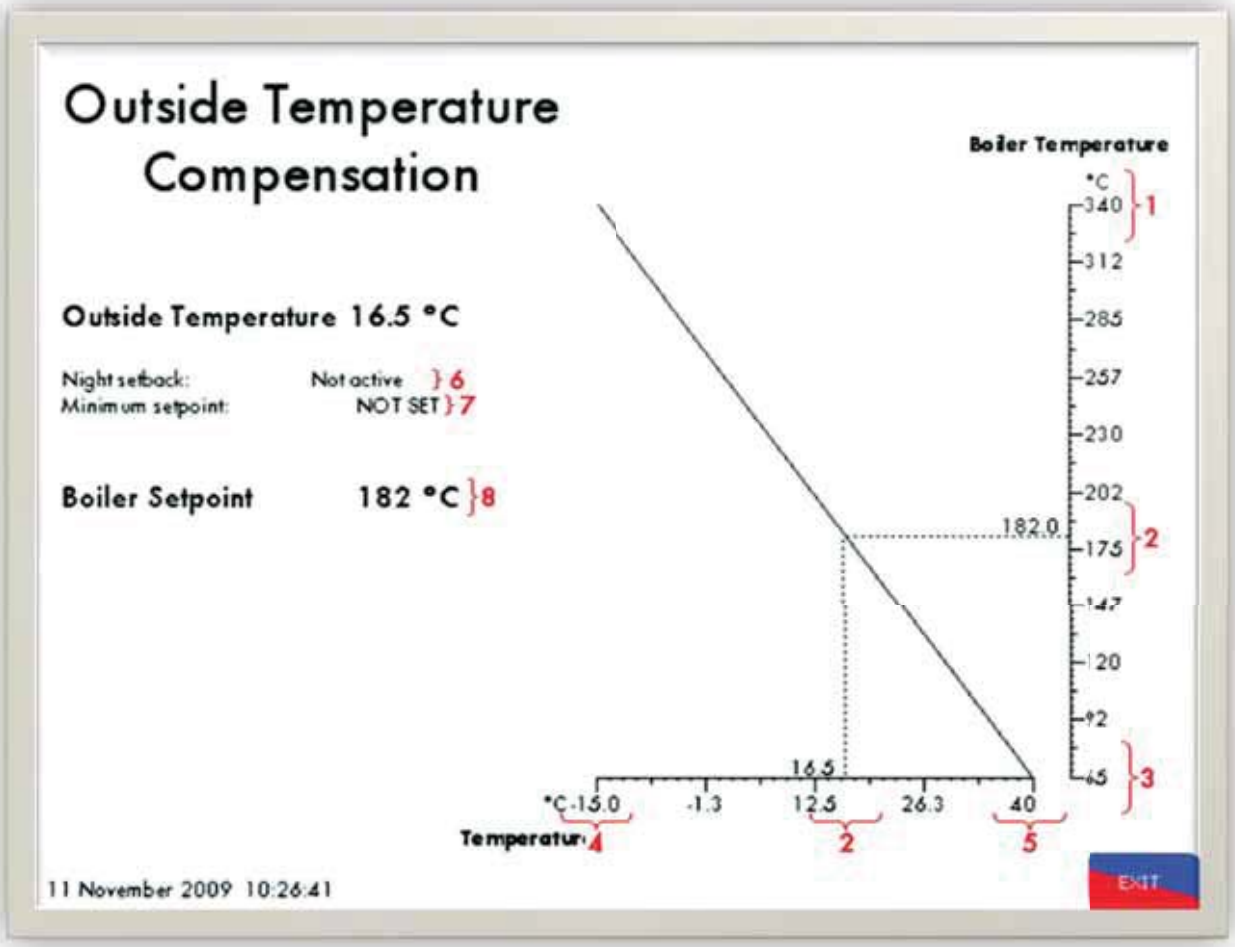

Figure 2.17.2.10 Outside Temperature Compensation Screen

OTC enables the boiler setpoint to be varied according to the outside air temperature, i.e. as the air temperature drops the boiler setpoint can be increased accordingly.

On the MK7 the outside temperature compensation graph is displayed such that the outside temperature scale is from left to right as the outside temperature increases. The limits of operation of this feature can be set through the Options menu. To enable Outside Temperature Compensation, set Option 80 to 1.

1. Maximum boiler required setpoint at minimum outside temperature (Option 81).

2. Current outside temperature and calculated actual required setpoint.

3. Minimum boiler required setpoint at maximum outside temperature (Option 83).

4. Minimum outside temperature (Option 82).

5. Maximum outside temperature (Option 84).

6. Night Setback is activated by an input on Terminal 93 and reduces the required setpoint by a value set in Option 85.

7. Minimum setpoint (Option 79). This sets the minimum required setpoint independent from Option 83 and without changing the range that is set for the OTC.

8. Boiler Setpoint as worked out through OTC.

Note:
If the actual outside temperature exceeds the boundaries set in Options 82 and 84, the boiler setpoint will remain at the maximum or minimum setpoints specified by Options 81, 83 and 79.

2.17.2.10.1 Outside Temperature Sensor

Connections	
Mk7 MM	Sensor
19	Red
20	Blue

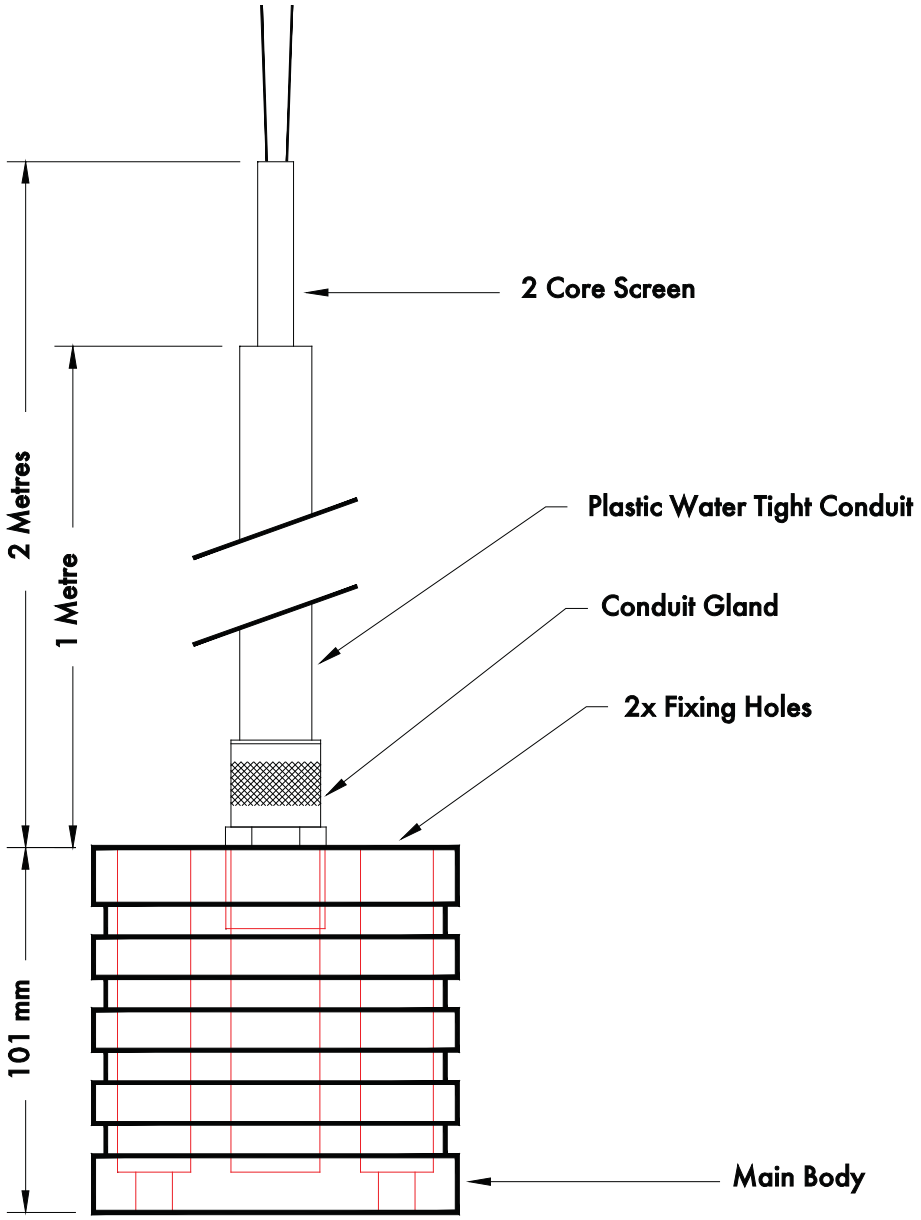

NOTE:

I.P. RATING	65
NEMA	4
HOUSING	ALUMINIUM
POWER CONSUMPTION	POWERED BY MK7 MM
MOUNTING	ANY ORIENTATION

2.17.2.11 Mk7 Electrical Specification

2.17.2.11.1 Classifications

Classification According to EN298 - F B L L J B

Mains Supply:	230V, +10%/-15% } 110V, +10%/-15% }	47 - 63 Hz, Unit max. power consumption 62W
Max Leakage:	3.5 mA	
Climate:	Temperature Humidity	0 to +40˚C (32 to 104˚F). 0 to 90% non-condensing.
Storage:	Temperature	-20 to 85˚C (-4 to 185˚F).
Protection Rating:	The unit is designed to be panel mounted in any orientation and the front facia is IP65, NEMA4. The back of the unit is IP20, NEMA1.	

2.17.2.11.2 Inputs and Outputs

230V Unit:

Outputs	Terminal	57	250mA	Must be connected through contactor	Max. Load 6 Amp
		58	250mA	Must be connected through contactor	
		59	1 Amp	0.6 power factor	
		60	1 Amp	0.6 power factor	
		61	1 Amp	0.6 power factor	
		62	1 Amp	0.6 power factor	
		63	1 Amp	0.6 power factor	
		78	100mA	To drive relay only – switched neutral	
		79	100mA	To drive relay/lamp only – switched neutral	
Analogue I/O s		240Ω or less			

120V Unit:

Outputs	Terminal	57	250mA	Must be connected through contactor	Max. Load 6 Amp
		58	250mA	Must be connected through contactor	
		59	2 Amp	0.6 power factor	
		60	2 Amp	0.6 power factor	
		61	2 Amp	0.6 power factor	
		62	2 Amp	0.6 power factor	
		63	2 Amp	0.6 power factor	
		78	100mA	To drive relay only – switched neutral	
		79	100mA	To drive relay/lamp only – switched neutral	
Analogue I/O s		240Ω or less			

Note:

1 The high and low voltage connections are not safe to touch. Protection against electric shock is provided by correct installation. **CAUTION – Electric shock hazard**.
2 Cabling should be a maximum 25m.
3 Use screened cable as specified in Section 2.17.2.11.4
4 **The burner 'High Limit Stat' must be of the manual reset type.**

2.17.2.11.3 Fuse Ratings

Fuse 2 - 500mA(T) Time lag
Part No. FU10040
(IR Sensor failure)

Fuse 3 - 2.5A(T) Time lag
Part No. FU10042
(Short Circuit on 12V)

Fuse 4 - 2.5A(T) Time lag
Part No. FU10042
(Internal 5V)

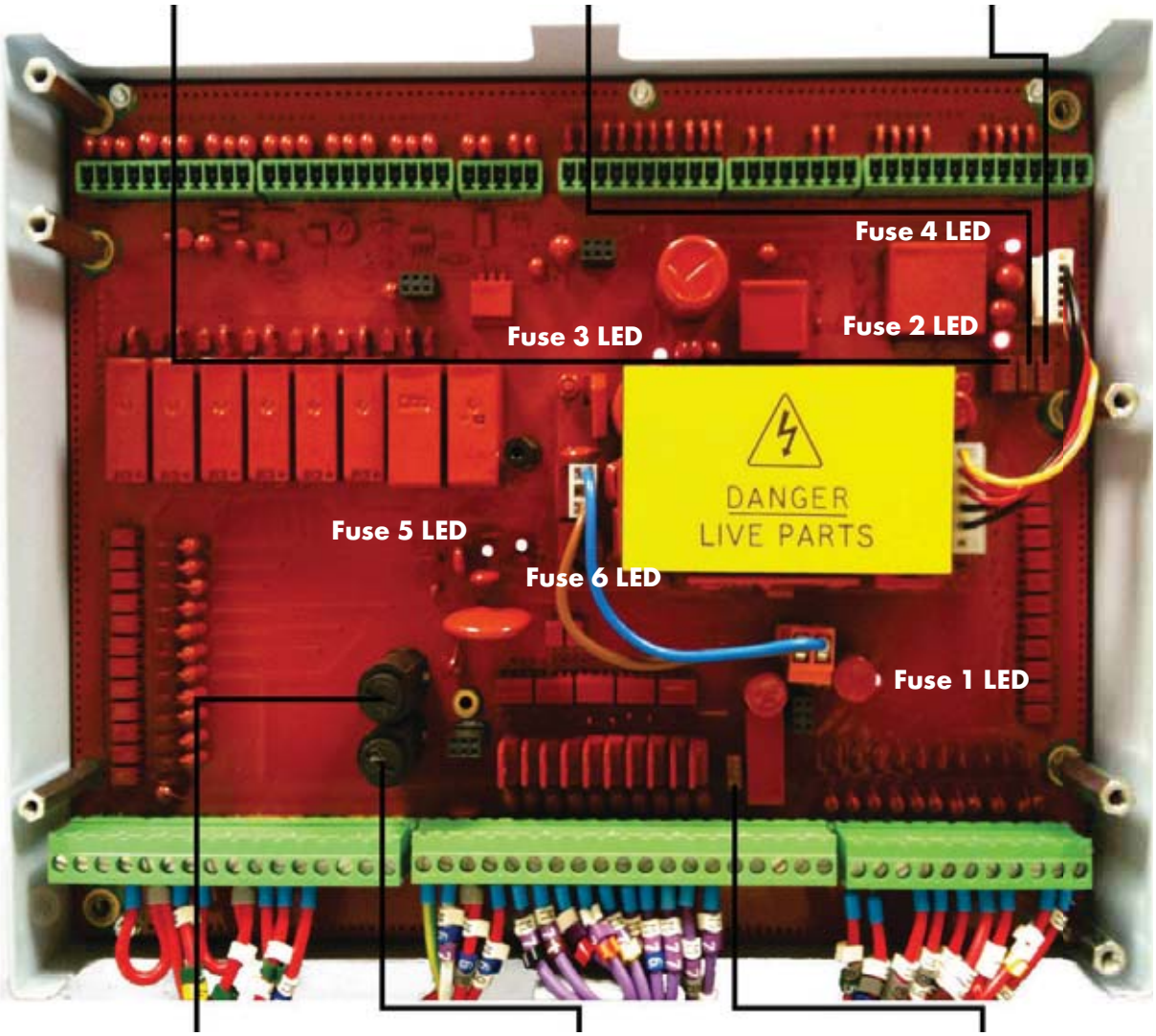

Fuse 6 - 2A(T) Time lag
Part No. FU10034
(Servo Short Circuit)

Fuse 5 - 6.3A(T) Time lag
Part No. FU10026
(Terminals 50 to 64)

Fuse 1 - 1A(T) Time lag
Part No. FU10041
(Servo AC Switching failure)

Text in brackets indicates possible causes of fuse blowing.

All fuses should be time lag type (T).

If an LED corresponding to a fuse is extinguished, then this indicates that the fuse has blown.

2.17.2.11.4 Cable Specification

Screened Cable

The screened cable used from the M.M. to the servo motors and detectors must conform to the following specification:

16/0.2mm PVC insulated overall braid, screened, PVC sheathed.

Sixteen wires per core;
Diameter of wires in each core 0.2mm;
Rated at 440 volts a.c. rms at 1600 Hz;
DEF 61-12 current rating per core 2.5 Amps;
Maximum operating temperature 70 degrees C (158 degrees F);
Nominal conductor area 0.5 square mm per core;
Nominal insulation radial thickness on core 0.45mm;
Nominal conductor diameter per core 0.93mm;
Nominal core resistance at 20 degrees C. 40.1 Ohm/1000m.;
Nominal overall diameter per core 1.83 mm;
Fill factor of braid screen 0.7;
Equivalent imperial conductor sizes 14/0.0076;

Use the number of cores suitable for the application.
A universal part numbering system appears to have been adopted for this type of cable as follows:

16-2-2C 2 Core
16-2-3C 3 Core
16-2-4C 4 Core
16-2-6C 6 Core

(5 Core not readily available)

Data Cable

Data cable must be used for connections between MMs for twin burner/sequencing applications and between MM's and EGA's.

Types of data cable that can be used:

1 Belden 9501 for 2-core shielded cable (1 twisted pair);
2 Belden 9502 for 4-core shielded cable (2 twisted pairs);
3 STC OS1P24;

Samples are available upon request.

Cable can be ordered directly from Autoflame Engineering.

2.17.2.11.5 Terminals Description

1	Current Input, 0-20mA. For channel 5 VSD use only. Can be connected to the current output of a VSD or tachometer system as appropriate
2	Voltage Input, 0-10V. For channel 5 VSD use only. Can be connected to the voltage output of a VSD or tachometer system as appropriate
3	Common for Terminals 1 and 2
4	Current Input, 0-20mA. For channel 6 VSD use only. Can be connected to the current output of a VSD or tachometer system as appropriate
5	Voltage Input, 0-10V. For channel 6 VSD use only. Can be connected to the voltage output of a VSD or tachometer system as appropriate
6	Common for Terminals 4 and 5
7	Current Input, 0-20mA. Used for external modulation or external required setpoint
8	Voltage Input, 0-10V. Used for external modulation or external required setpoint
9	Common for Terminals 7 and 8
10	Current Output, 4-20mA. For channel 5 VSD use only. Can be connected to the current input of a VSD
11	Voltage Output, 0-10V. For channel 5 VSD use only. Can be connected to the voltage input of a VSD
12	Common for Terminals 10 and 11
13	Current Output, 4-20mA. For channel 6 VSD use only. Can be connected to the current input of a VSD
14	Voltage Output, 0-10V. For channel 6 VSD use only. Can be connected to the voltage input of a VSD
15	Common for Terminals 13 and 14
16	Current Output, 4-20mA. Varies in accordance with firing rate
17	Voltage Output, 0-10V. Varies in accordance with firing rate
18	0V common for Terminals 16 and 17

Note that all the common Terminals (3, 6, 9, 12, 15, 18) are connected to each other internally. All of the circuitry, associated with the analogue inputs and outputs detailed above, is isolated from earth/ground potential, i.e. floating.

19, 20	Connections to the Autoflame outside temperature sensor
21, 22	Connections to an Autoflame self check UV sensor
23, 24	Communications port connections for twin burner operation
25, 26	Communications port connections to an Exhaust Gas Analyser (E.G.A.)
27, 28	Communications port connections for DTI and/or IBS/lead-lag operation
29, 30	Connections to an Autoflame Self check IR sensor (M10017)
31, 32	Signal inputs from Autoflame air pressure sensor
33	0V supply to Autoflame air/gas/oil pressure sensors
34	+12V supply to Autoflame air/gas/oil pressure sensors
35	Signal input from Autoflame oil pressure sensor
35, 36	Signal inputs from Autoflame gas pressure sensor
37, 38	Connections to an Autoflame boiler temperature detector
37, 38, 39	Connections to an Autoflame boiler pressure detector
40	0V supply to channel 1 and channel 2 positioning motors
41	+12V supply to channel 1 and channel 2 positioning motors
42	Signal from channel 1 positioning motor, indicating position
43	Signal from channel 2 positioning motor, indicating position
44	Signal from channel 3 positioning motor, indicating position
45	Signal from channel 4 positioning motor, indicating position
46	0V Supply to channel 3 and channel 4 positioning motors
47	+12V Supply to channel 3 and channel 4 positioning motors
48, 49	No Terminals allocated

50,51	Connections to an Autoflame UV sensor
52	Mains voltage input- external auxiliary delay to purge
53	Mains voltage input- burner on/off signal. Running interlock circuit
54	Mains voltage input- safety circuits, e.g. air proving
55	Mains voltage input- proving circuits, e.g. gas valve proof of closure
56	Mains voltage input- lockout reset
57	Mains voltage output- call for heat
58	Mains voltage output- burner motor
59	Mains voltage output- start/pilot valve
60	Mains voltage output- main fuel valve 1
61	Mains voltage output- main fuel valve 2
62	Mains voltage output- vent valve
63	Mains voltage output- ignition transformer
64	Unused
65	No Terminal allocated
66	Mains supply- earth
67	Main supply- neutral
68	Mains supply- live/hot
69	Mains voltage output. Power to positioning motors
70	Switched neutral- drives channel 1 positioning motor clockwise
71	Switched neutral- drives channel 1 positioning motor counter clockwise
72	Switched neutral- drives channel 2 positioning motor clockwise
73	Switched neutral- drives channel 2 positioning motor counter clockwise
74	Switched neutral- drives channel 3 positioning motor clockwise
75	Switched neutral- drives channel 3 positioning motor counter clockwise
76	Switched neutral- drives channel 4 positioning motor clockwise
77	Switched neutral- drives channel 4 positioning motor counter clockwise
78	Switched neutral-to drive 2-port valve for IBS/lead-lag operation

79	Switched neutral- alarm output for MM lockout/MM error/EGA error/TDS limits
80	Unused- do not connect
81	Unused- do not connect
82	Unused- do not connect
83	Unused- do not connect
84	Unused- do not connect
85	Mains voltage input. For use when using an external flame switch- 0V when at no flame state. Or when using boiler differential proving
86	Mains voltage input. For use when using an external flame switch- line voltage when at no flame state
87	Mains voltage input. Select second required setpoint- second set-point facility
88	Mains voltage input. Can be used to select this M.M. as lead boiler when IBS/lead lag is implemented. If this terminal is used to select the lead boiler, it will take priority over a lead boiler set via the DTI. Also used as an input to select external modulation using an external PID loop
89	Mains voltage input- selects fuel 1 curve
90	Mains voltage input- selects fuel 2 curve
91	Mains voltage input- selects fuel 3 curve
92	Mains voltage input- selects fuel 4 curve
93	Mains voltage input- if low pressure steam operation is optioned, this input is used to detect low boiler temperature (by means of an appropriate temperature switch/aquastat). If outside temperature compensation is optioned, this input is used to activate the night setback
94	Mains voltage input- selects hand operation
95	Mains voltage input- selects low flame hold operation
S	All terminals marked S are internally connected. They are provided for connections to the various screened cables. Refer to the schematic connection diagrams, section 2.17.2.11.4

2.17.2.12 Variable Speed Drives

Installation

The following recommendations are to assist with the installation and fault finding when using variable speed drives (VFD's/inverters).

Inverter Selection

Variable speed drive selection is critical to proper operation. Ensure that the correct size inverter has been selected for the application and is suitable for the motor, and has the necessary input/output signals as shown in section 2.17.2.12.1

Mains Cable Connections

Power connections from the variable speed drive to the motor- it is recommended for mains cabling (3 phase) and fuses, that they are to be dimensioned in accordance with the kW rating required.

Motor Cabling

A four core conductor screened cable is recommended. This is due to the rapid voltage changes occurring in variable speed drive systems.

To Avoid Disturbances

It is advised that the motor cables should not be installed with other cable routes- avoid long parallel runs with other cables.

Disturbances caused by radiation from the motor cable can be reduced by installing in-line chokes in the motor cable. However, these chokes may reduce the motor voltage and the maximum available torque. If noise problems exist and unstable output signals cannot be contained within the window and disparity band shown in section 2.17.2.12.2, you should contact the supplier of the variable speed drive for more detailed information and advice.

Setting the VSD for Operation

Due to the vast range of variable speed drives it is not possible to give settings/parameters for all types, however some basic rules apply. The minimum and maximum Hz (rpm) should be adjusted before commissioning the Micro Modulation unit. Also the ramp time should be set for the fastest time possible, taking into account limitation of the motor and the application.

Normal settings would be, low speed 25Hz and high speed 50/60Hz. It is not recommended to set low speed lower than 20Hz. This is because the feedback signal tends to be unstable in this range and overheating of the motor may occur.

2.17.2.12.1 Input and Output Signals in Relation to Frequency

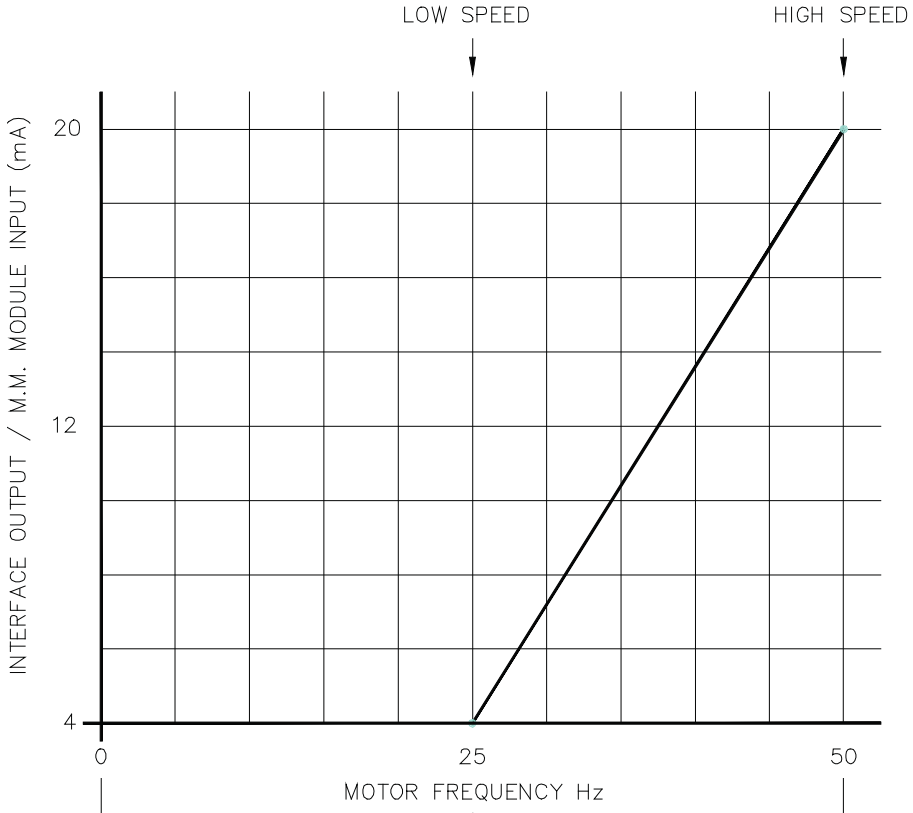

GRAPH A

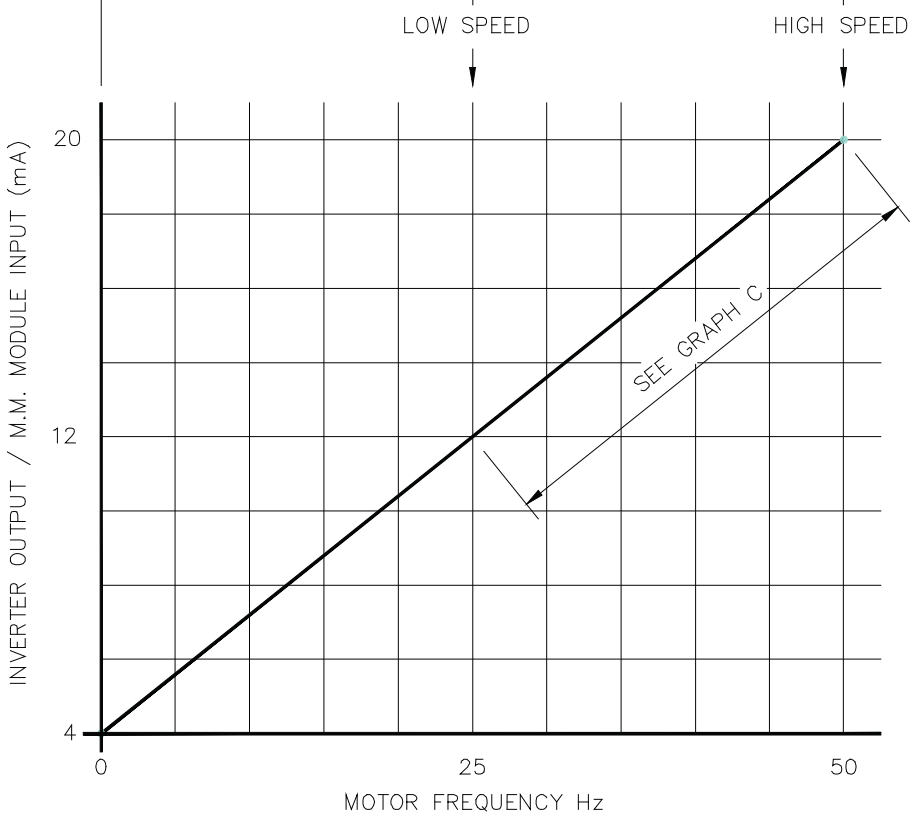

GRAPH B

2.17.2.12.2 Operational Characteristics of Inverter Output/M.M. Module Input in Relation to Frequency

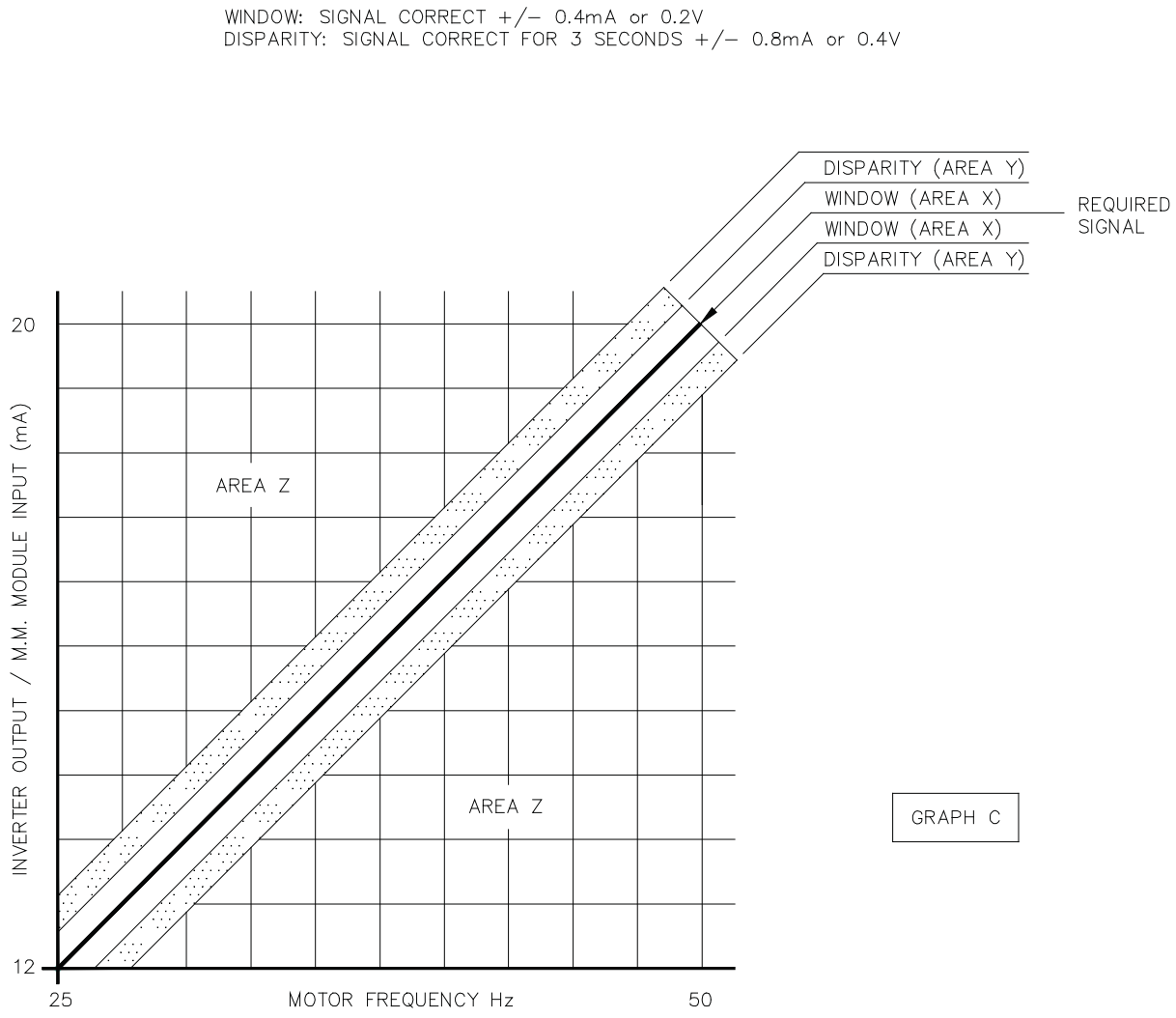

2.17.2.12.3 Variable Speed Drive Safety Software

In a typical example the motor speed at 50Hz would be 2900rpm and the motor speed at 25Hz would be 1450rpm. This example is typical as there is a linear relationship between linear speed and cycles Hertz. The variable speed drive software allows the following amount of error (disparity) between signal out to the variable speed drive and signal return to the MM.

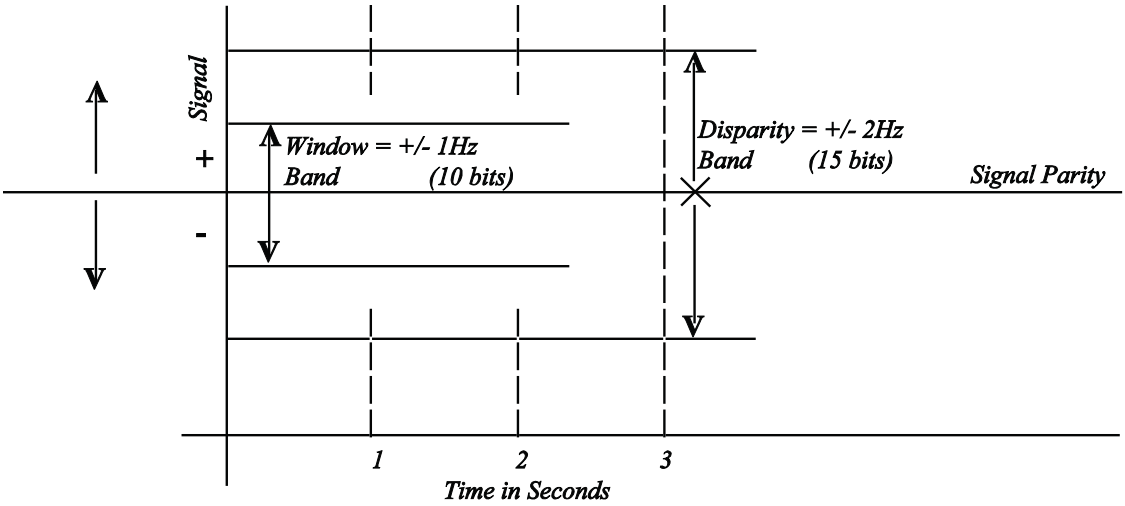

The "Window" tolerance has been implemented to accommodate small variations between input and output signal that result from processing through the various A-D and D-A converters involved in the control loop, also motor "Slip", acceleration and deceleration times, all of which produce small variations.

The "Disparity" tolerance which is time limited to a short duration is implemented to deal with the transient disparity/error between input and output signals that results from the PI control mechanism that is typical in variable speed drives (motor speed control mechanism) not operating in phase with the PI(D) control philosophy in the M.M. (Micro Modulation Fuel Air Ratio Controller). This transient disparity occurs and is always self-correcting within the three second time tolerance nominated in the Autoflame control philosophy.

1 Not withstanding the above, to deal with transients of a very small time scale but of amplitude greater than the disparity (area Y) as in section 2.17.2.12.2, there is an additional mechanism in the software that allows transient deviations of any amplitude to be tolerated for a duration of less than one second. Under these conditions an error will not be flagged.
Note: area Z in section 2.17.2.12.2. Any signal deviation longer than one second in area Z will activate safety errors. The tolerance safety time is set for 3 seconds.

2 The "Window" tolerance is +/- 5 bits = 1 Hz = 58rpm (on a motor rotating at 2900rpm at 50Hz).

3 The disparity tolerance is +/- 10 bits = 2Hz = 116rpm (on a motor rotating at 2900rpm at 50Hz). Note that disparity band 2Hz is limited to a maximum of 3 seconds.

4 Fan laws state that:
a) Speed and volume are a direct linear progression.
b) Speed increase as a percentage affects pressure produced by the fan as a square root function.

5 The variations in signal allowed in our software would have considerably less effect on the fuel air ratio supplied to the combustion process than variations in ambient temperature/air density etc.

2.17.2.12.4 Control Philosophy

When the M.M. is commissioned all the positions for the fuel/air ratio are entered into the memory. These positions are stored together with a motor speed and air damper position. This allows the M.M. to measure the slip by measuring output signal to the variable speed drive, return signal from a tacho and learning the difference for any air position/motor speed setting. This control form gives the facility for a different combination of air/motor speed settings to be accommodated for varying fuels, i.e. F1, F2, F3 & F4. This facility accommodates variances for air requirement for different fuels which is fundamental to the hydrocarbon ratio of the fuel.

Diagram to show Increase in Slip Caused by Damper Sited on Inlet to Combustion Fan
(Caused by pressure/density variations that fan operates in as a function of its position in load index).

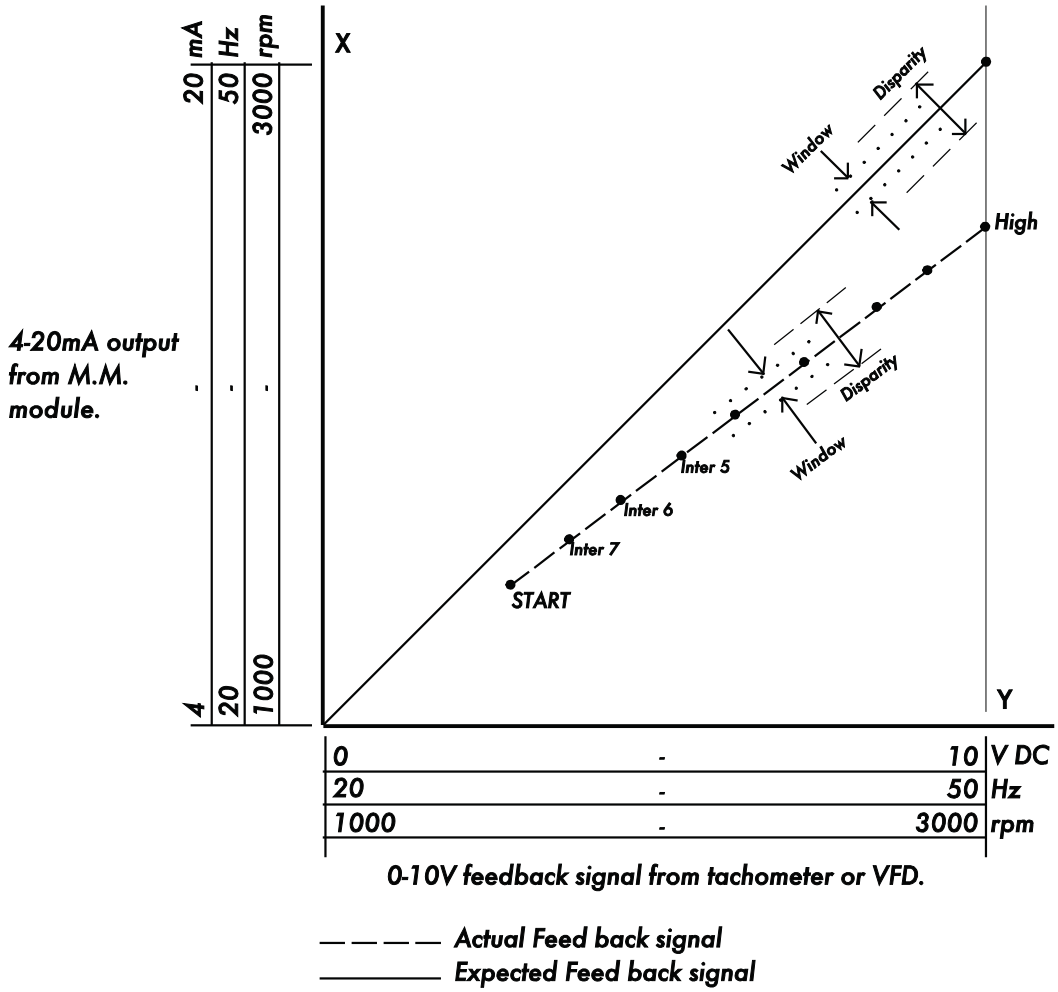

During commissioning, each time a position is entered (HIGH/INTER/START) the M.M. also stores the feedback signal value. When the START (low flame) position is entered these values are stored permanently in the memory. A set of values can be stored for each fuel (max. 4). When the M.M. is in the RUN mode the set of values stored for the fuel presently selected is used to generate the window and disparity error checking bands. In commissioning mode error checking is disabled. During run the error checking is disabled during the start up cycle.

2.17.2.13 Installation Checks

Commissioning Checks

When the installation and all burner adjustments are completed, the entire burner control system should be tested in accordance with the manufacturer's instructions. The procedure should verify the correct operation of:

1. Each operating control (temperature, pressure, etc.)
2. Each limit switch (temperature, pressure, low water cut-off, etc.)
3. Each interlock switch (airflow switch, high & low fuel pressure or temperature switches, purge and low fire switches, fuel valve proof of closure interlock, etc.)
4. Pilot flame failure response and lockout
5. Main flame failure response and lockout
6. Tight shut off of all valves

Operational Checks

1. Close manual main shut-off valve
2. Recheck all limit circuit wiring for proper operation and correct connection
3. Confirm that the automatic main fuel valves are wired correctly
4. Power the control and electronically check the proper sequence of operation
5. After assuring yourself that all the interlocks and valves are properly wired and that the sequence of operation is correct, open the manual main shut-off fuel valve and proceed cautiously through the boiler light off process. Check all safety interlocks for proper shutdown of the boiler

Commissioning or start-up must only be carried out by a factory trained technician.

2.17.2.14 Notes on Programming Fuel Air Positions

During commissioning press

to display the channel 1 to 6 values.

Press

to display the fuel selected, actual value and required setpoint. (The required setpoint will be displayed but cannot be adjusted during commissioning. During commissioning the internal stat remains made all the time regardless of the actual value). **Note:** Ensure that the high limit stat is set correctly and wired into the non-recycling interlock, as this will turn the burner off in the event that the maximum temperature or pressure is exceeded.

The OPEN and CLOSE are stored during commissioning. This means if a lockout occurs upon the first burner light off during commissioning there is no need to re-enter the OPEN and CLOSE positions. The burner will restart once the lockout has been reset and go straight to purge, once purge is complete you are asked to again set the start position. However, if power is completely removed from the system then these positions are not retained in the memory and the OPEN and CLOSE positions will need to be re-entered.

If

continues to flash when pressed, this indicates that the running interlock (Terminal 53) is not made, there is an E.G.A. error or the water level is not commissioned (if using the Autoflame Water Level Control). Please refer to the fault finding section 2.17.5

If during commissioning the burner turns off, due to the 'running interlock' opening or a lockout, it is possible to carry on commissioning from the last entered position. This is possible as long as the HIGH position has been entered, and the fuel selected is not changed. When the 'running interlock' is closed again, or the lockout is cleared, the system will purge automatically. Commissioning will then be resumed at Step 9. Automatically the system bypasses the HIGH position entry and resumes the commissioning procedure from the last entered INTER position. Effectively commissioning can now be carried on from Step 14.

2.17.2.15 Programming Fuel Air Positions (Systems Without EGA)

1. Ensure 'stat' control circuit is closed (refer to 2.17.3.1), i.e. ensure that there is an input on Terminal 53.

2. Select fuel. The MM will go to the password screen.

Note: If fuel selected is being re-commissioned, press

on the startup screen when it appears.

3. Use the on screen keypad to enter the Password and press Continue (2.17.2.15.i). If the incorrect password has been entered, simply press the "Channel 1" or "Channel 2" to renter a password. There is no need to recycle power to enter a different password.

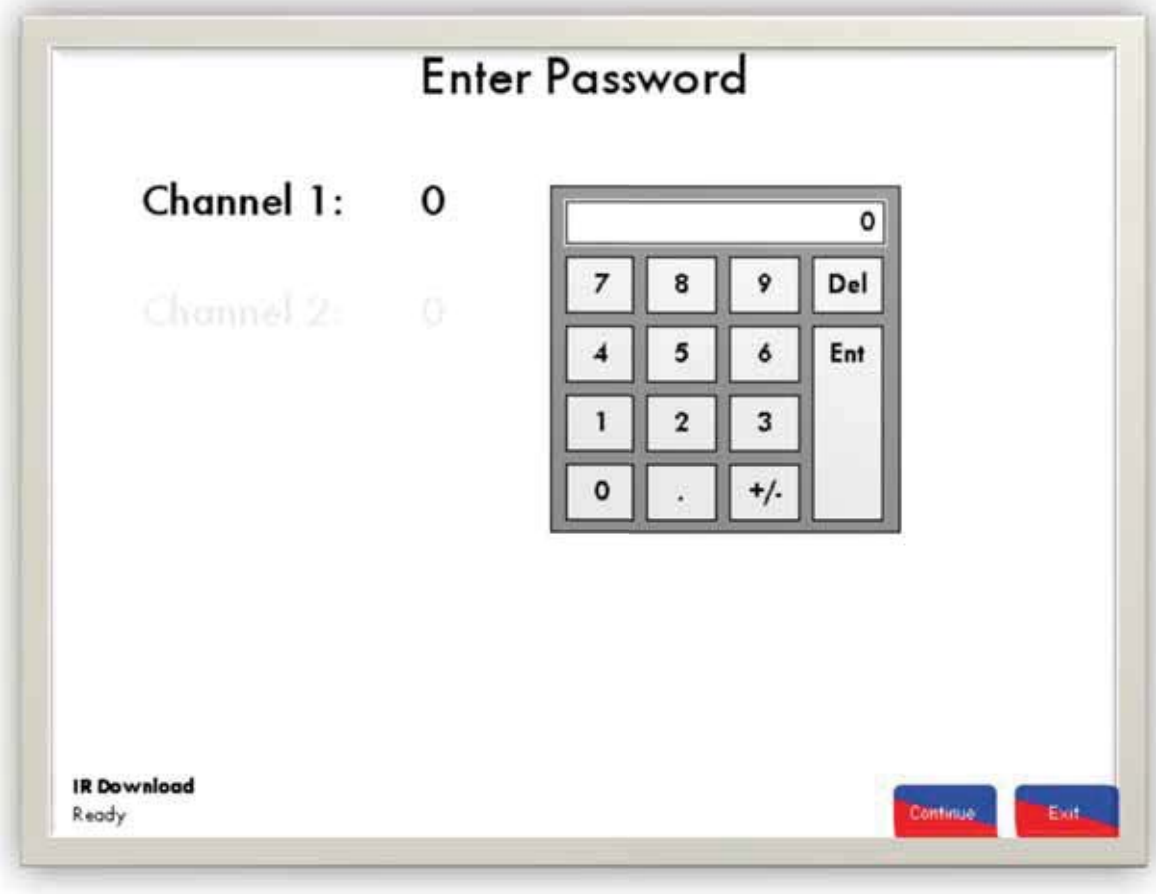

Figure2.17.2.15.i Password Screen

4. The Commission Mode screen will be displayed (2.17.2.15.ii). Please press the Commission button.

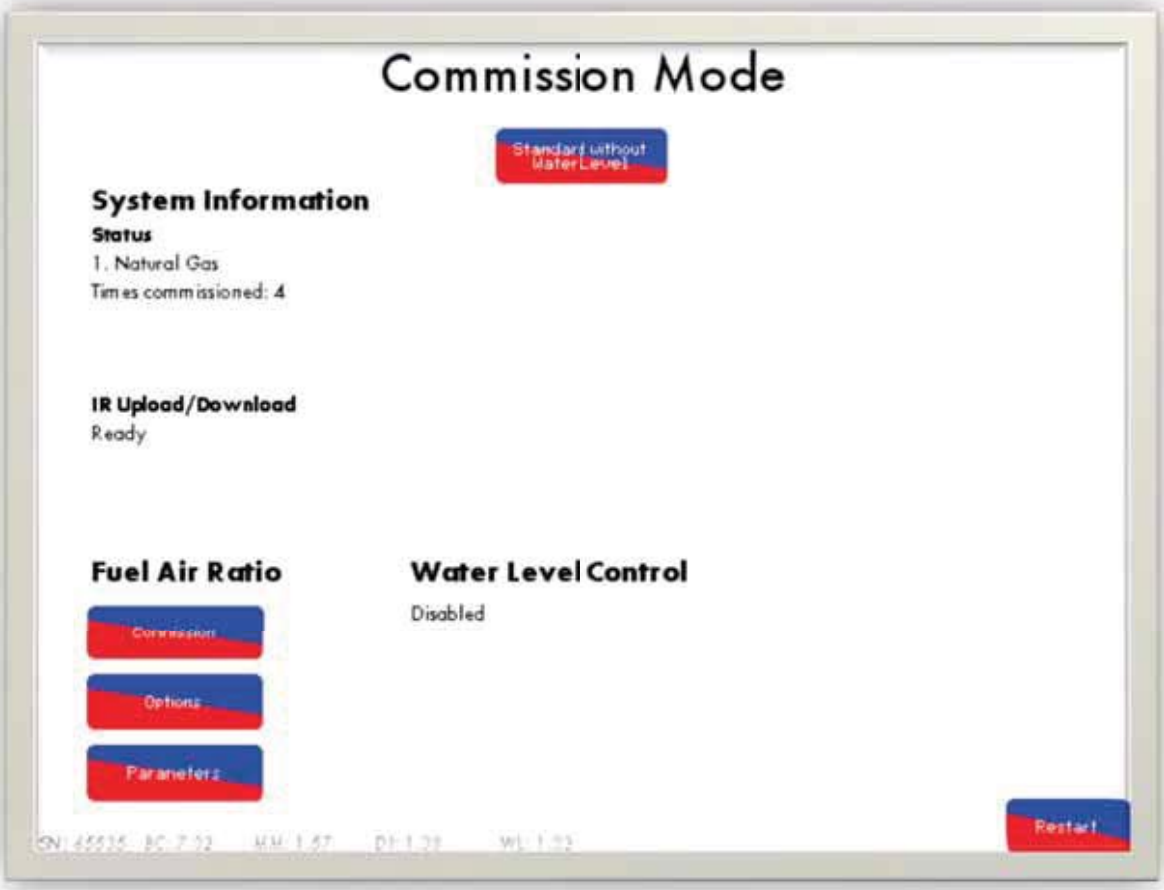

Figure 2.17.2.15.ii Commission Mode Main Menu

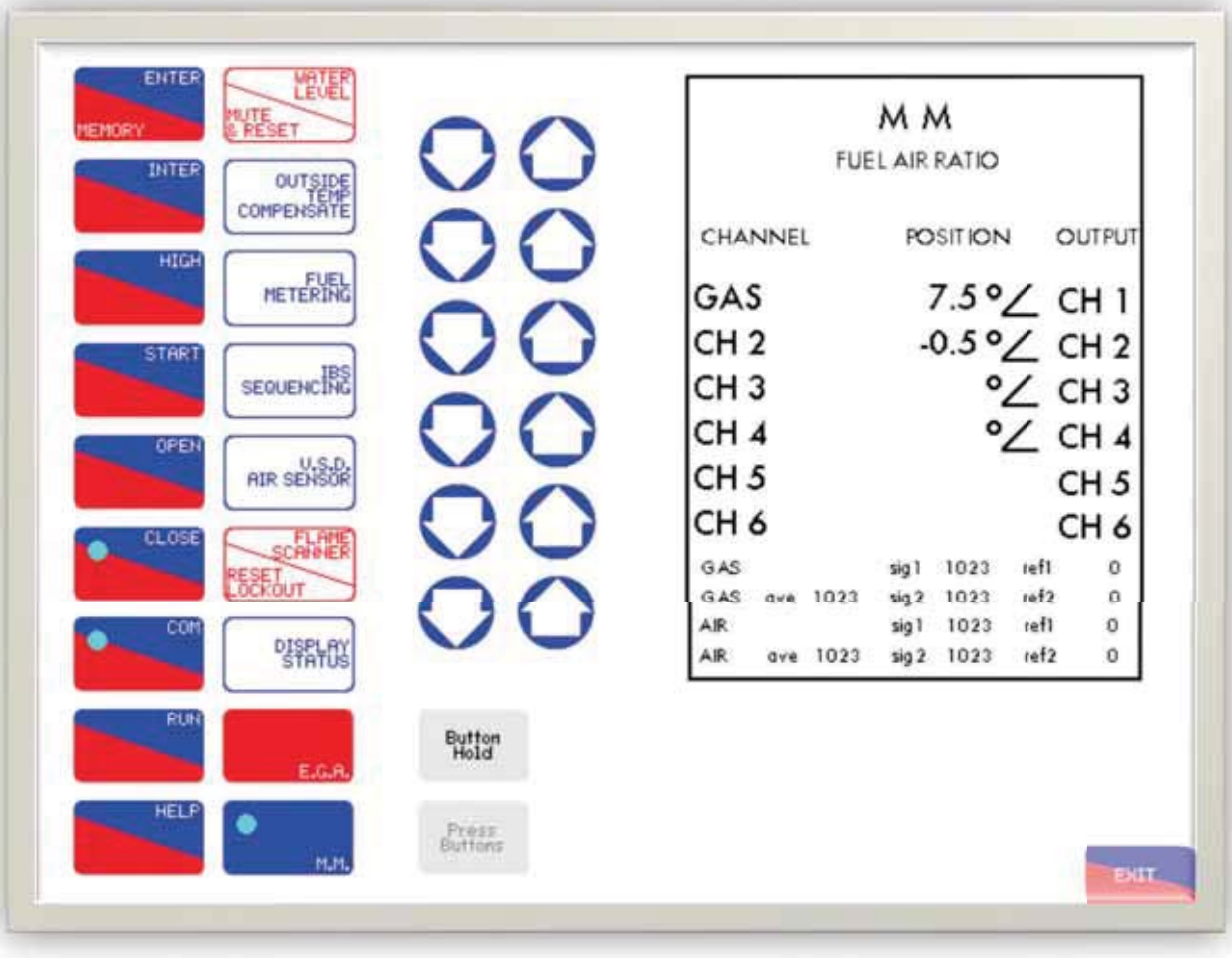

Figure 2.17.2.15.iii Mk6 Mode Commissioning Screen

5. The display indicates angular position of servo motors. After the internal checks are made CLOSE flashes. Press CLOSE to start entering the close position.

Note: No error checking of the servomotors is enabled at this stage. Therefore, be careful not to drive the servomotors/dampers beyond any mechanical limitations that may be present on the damper/valve. This may cause damage to the servomotor and/or the damper/valve.

6. Use CH1 to CH4 (as optioned) buttons to set positioning motors to 0.0°.

Note: Double check the valve/damper is physically at the 0.0 (closed) position. This can be achieved by checking for external indications on the damper assembly or the fuel valve. Remember, it is your responsibility to ensure the servomotors are correctly calibrated. Incorrect calibration can cause serious injury or death.

Press ENTER MEMORY (OPEN flashes). The servomotor error checking is now enabled. If there is excess torque or a wiring issue the system will shut down and show an Error message

7. Press (OPEN steady, ENTER MEMORY flashes).

8. Use CH1 to CH4 buttons to set positioning motors to their fully open positions. Channels 5 and 6 cannot be adjusted at this stage. Their calibration is dictated by the drive set-up and the associated Option settings.

   This is normally 90.0° for gas butterfly valves and burner air dampers, but may be set to less than 90.0° if there are mechanical stops/limits.

   Press (System purges, at end of purge, START flashes).

9. Press (START steady, ENTER MEMORY flashes).

WARNING Do not enter START position before reducing fuel input. This could result in a potentially dangerous situation, serious physical damage or death.

10. Use CH1 to CH6 to set positioning motors to positions where ignition can take place.

Note: Ensure that the main fuel valve is manually isolated until the pilot flame has been successfully established. Once this has been successfully established, gradually introduce the main fuel supply to the burner observing the flame stability. Continue to introduce fuel until the manual operated main fuel isolation valve is fully open providing safe and stable combustion that can be maintained. If the combustion is not safe and stable, then adjust the fuel/air ratio accordingly. See Section 2.17.2.17 on the Pilot Turndown feature which can be used to make adjustments to the start gas flame.

11. Press (Burner ignites, HIGH flashes). If a Golden Start has been optioned then the Start may flash for a second time. The Golden Start can be ignored at this time and re-entered if necessary after the commissioning has been complete.

12. Press (HIGH steady, ENTER MEMORY flashes).

    Note: There is no control over the servo motors position until is pressed.

13. Use CH1 to CH6 to set maximum firing input (it is not possible to exceed the OPEN position values). Always increase the air first, followed by the fuel angular positions.

14. Press (INTER, or INTER and START flash).

    Note: Only INTER flashes if the number of INTER positions entered so far is less than or equal to three, thereafter INTER and START flash.

15. Press

or

(INTER or START steady, ENTER MEMORY flashes).

    Note: There is no control over the servo motors position until

or

is pressed.

16. Use CH1 to CH6 (as optioned) to reduce the positions. Always reduce the fuel first, followed by reducing the air angular position.

    If the present position is an INTER position, go back to 14, otherwise proceed further. If Start is selected the CH1 to CH6 will now need to be adjusted for the Start position. This will also be the light-off position. Remember, a Golden Start can also be added to the commissioning programme once the main commissioning programme is stored. This can provide more stable light-off.

17. Press

. After a short pause, RUN flashes.

18. Press

to set the system into normal modulating mode and to store the commissioning program.

Note: If the burner has been previously commissioned then once RUN is pressed then this will overwrite the previous data for the fuel selected. Failure to hit RUN will result in the commissioning data not being stored within the unit. If this is done, a loss of power will result in a loss of data for the fuel selected.

2.17.2.16 Programming Fuel Air Postions With Quick Trim (Systems With A EGA)

Quick Trim is a new function on the Mk7 that has been added so that the burner can initially be commissioned quickly when using an EGA for combustion trim. The function allows the commissioning engineer to quickly enter a full combustion curve in situations where there is a low demand for heat or steam. Entering the fuel rich and air rich data for the combustion map can sometimes take too long. Single point changes can then be accessed at a later time to add trim to the curves. See Section 2.17.7.11. To use Quick Trim Parameter 74 must be set to 1.

Commissioning with Quick Trim is exactly the same as commissioning with trim with a few exceptions.

1. On the commissioning screen you must select the Quick Trim button Figure 2.17.2.16. (EGA must be set to an Option where trim is to be used).

2. During commissioning, the MM will not invoke the auto commission time of 60 seconds either side of the commissioned point to build a combustion map. On completion of an entered point the MM will simply ask the commissioning engineer to go to the next point and continue to enter the fuel/air ratio paired values.

3. Single point change must be used to add trim to the points on the curve. While in single point change, re-entering the points on the curve will force the MM to sample fuel rich and air rich, adding combustion data to the previously commissioned data. This means that the combustion engineer can manage the plant load while the trim values are being store by entering the points in no set order.

4. When viewing the combustion map (Figure 2.17.7.24) each point on the fuel curve that has not had trim added (not been re-entered during single point change) will display the commissioned values in yellow. All of these points must be entered for the trim function to operate correctly.

Figure 2.17.2.16 – Commission Mode Screen With Quick Trim Button

2.17.2.17 Pilot Turndown/Check Switch Facility

When the system is in commissioning mode only, a facility has been provided that enables a commissioning engineer to pause the ignition sequence of the burner. If the lockout button is pressed during the first safety time the burner control will 'pause' at this position. This enables the commissioning engineer to make adjustments to the start gas flame. If the flame goes out during this time a lockout is set after 15 seconds. If the flame is present and the 'pause' condition is left indefinitely a lockout will be set after 10 minutes. If the lockout button is pressed again the ignition sequence continues. While paused the lockout LED on the front facia flashes. The 'pause' facility can also be activated during the pilot prove and main flame prove phases. When the system is in a run mode the facility is disabled.

WARNING

IT IS THE RESPONSIBILITY OF THE FACTORY TRAINED TECHNICIAN TO ENSURE THAT USE OF THE PAUSE FACILITY DOES NOT LEAD TO A HAZADOUS SITUATION. FAILURE TO DO SO WILL RESULT IN SERIOUS EQUIPMENT DAMAGE, CRITICAL INJURY OR DEATH.

2.17.2.18 Golden Start

This facility enables an ideal ignition/start position to be set into memory that is not necessarily low flame or indeed part of the standard modulating load index.

To enable this facility set Option 29 to 0 (default setting is 1).

To disable this facility set Option 29 to 1.

To implement this operation enter commissioning mode i.e. press

during startup.

Enter the password and press

button.

The normal commissioning process will then begin by entering the close, open and light off positions as you would do during a normal commissioning. After the light off position has been entered the

button LED will flash again. This is indicating the MM requires the Golden Start Position. Press the

button and the LED will stop flashing and use the buttons to change the servo positions as you would for changing any normal point on the combustion curve. Once the correct Golden Start Positions have been found press the

button to enter the Golden Start Position and continue the commissioning process as normal. If the burner has already been commissioned then, powering down the MM unit before entering the High Fire position will only make a change to the Golden Start position not to any other positions on the combustion curve.

NOTES:

1. The Golden Start position of the fuel and air positioning motors is completely independent from the modulating load index and commissioned value data.
2. The facility is particularly useful on combustion systems with large turndowns and when firing heavy oil, as it enables the burner to start/iginite at a fuel rich position and then, after a stable flame is established, return to the commissioned combustion curve.
3. The Golden Start needs to be entered for each required fuel.
4. The time the MM holds the Golden Start position for is adjustable via Parameter 15 (default value is 5 seconds, range 0-100 seconds). This timer starts from the ignition point. After this time the air damper will open and the fuel valve will stay in the same position until the fuel/air ratio is on the commissioned combustion curve. At this point the MM will start to modulate based upon the load demand and the PID control.
5. It is important to appreciate that the Golden Start position is completely independent of the fuel/air ratio values that are entered for the normal combustion curve.

2.17.2.19 Flue Gas Recirculation (FGR)

Flue Gas Recirculation (FGR) is a method whereby a quantity (approximately 15%) of the boiler flue gases are fed back to the burner and mixed with the combustion air. The virtue of FGR is the reduction of NOx gases. With the FGR facility, positioning motor channels 3 or 4 can be used to control the amount of flue gas fed back. It is not good practice to feed back the gases when the flue gas is cold, so all the elements (i.e. positioning motors and VFD's) can be set at 'FGR' positions until the gases are hot. During this time the elements (CH3 or CH4) controlling the FGR would normally be set closed. Once the gases are hot, modulation takes place in the normal way using the curve entered during commissioning.

To ascertain if the gases are hot a number of options have been added:

Option 48

A time in seconds that the FGR positions are held for. This timer starts at the end of main flame proving, once the timer is finished modulation takes place. If a golden start is used in conjunction with the FGR start then the FGR start timer will begin at the end of the golden start timer.

Option 49

An offset below the required setpoint. All channels are held in FGR start positions until the actual value reaches the offset value below the required setpoint.

Option 50

This is an enable/disable type option. If enabled an E.G.A. must be present on the system.
The FGR positions are held until the exhaust temperature value from the E.G.A. reaches 248F (120C). Once the exhaust gases reach this temperature then normal modulation will occur.
It is possible to use all three of the above options in order to keep the FGR start positions. If this is done then the timer will be held firstly and then the other two options must be satisfied for release to modulation.

It is important to check the setting of Parameter 90, which determines at what time the FGR start position will be entered.

If the burner has been commissioned and it is necessary to add an FGR start position, set parameter 90 to 1, and one of the above options to enable FGR start. Then enter the commissioning mode and after the start position is entered the M.M. will prompt for the FGR start position to be entered. After this is entered the M.M. can be reset and this FGR start position will be stored in the memory.

2.17.3 MK7 WIRING

2.17.3.1 Wiring Schematic

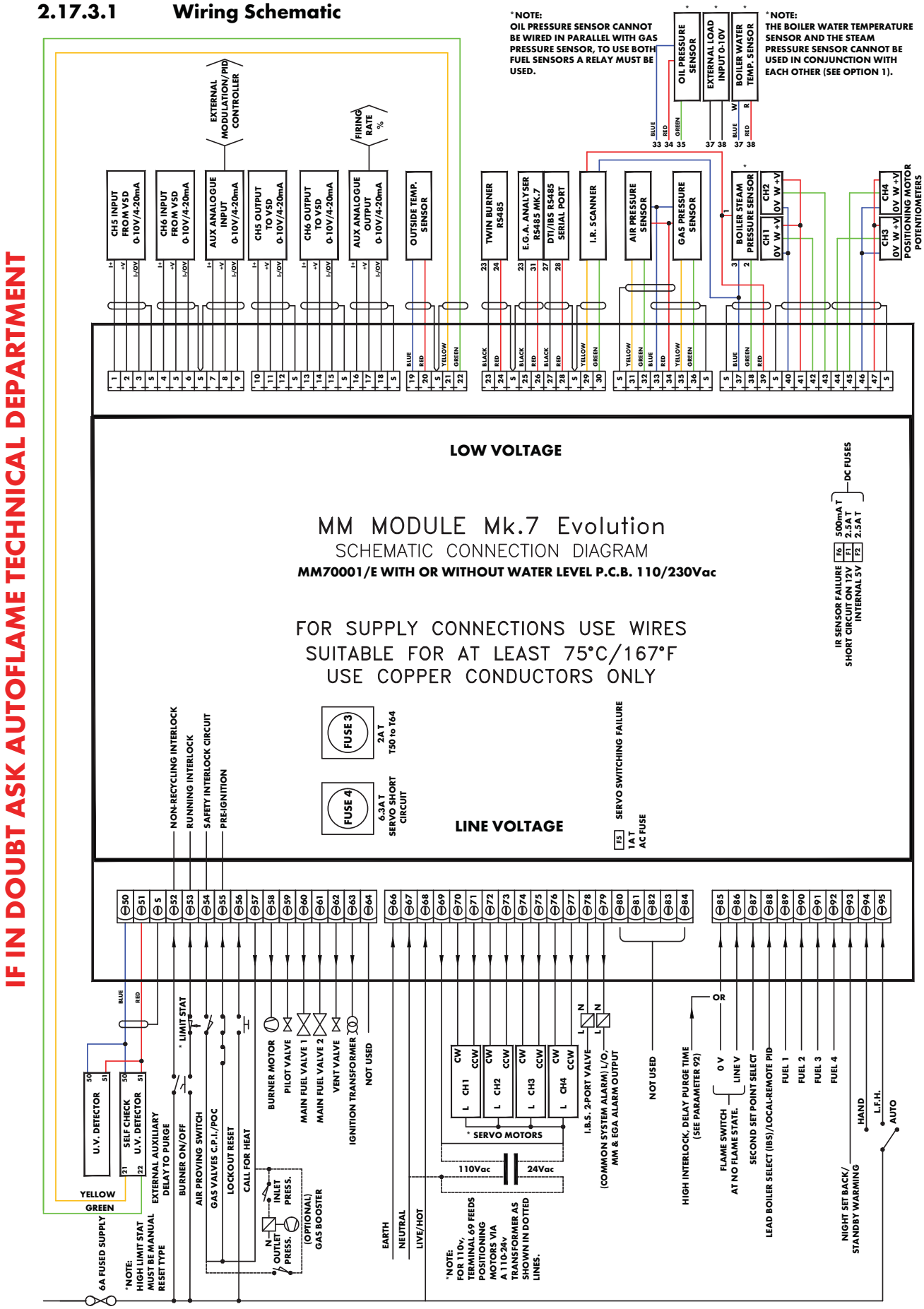

2.17.3.2 Water Level Schematic

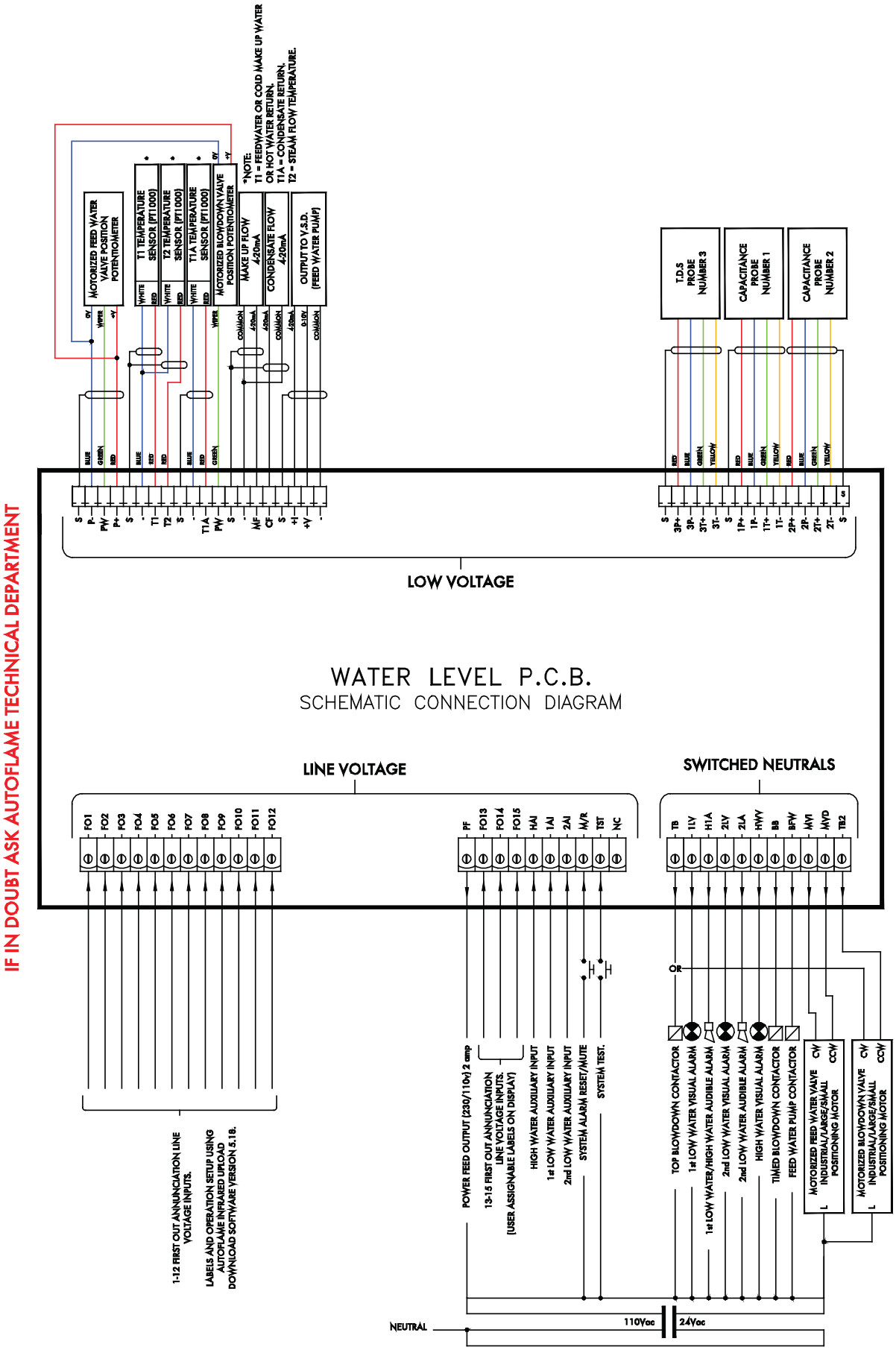

2.17.3.3 Connection Between EGA and Mk7 MM

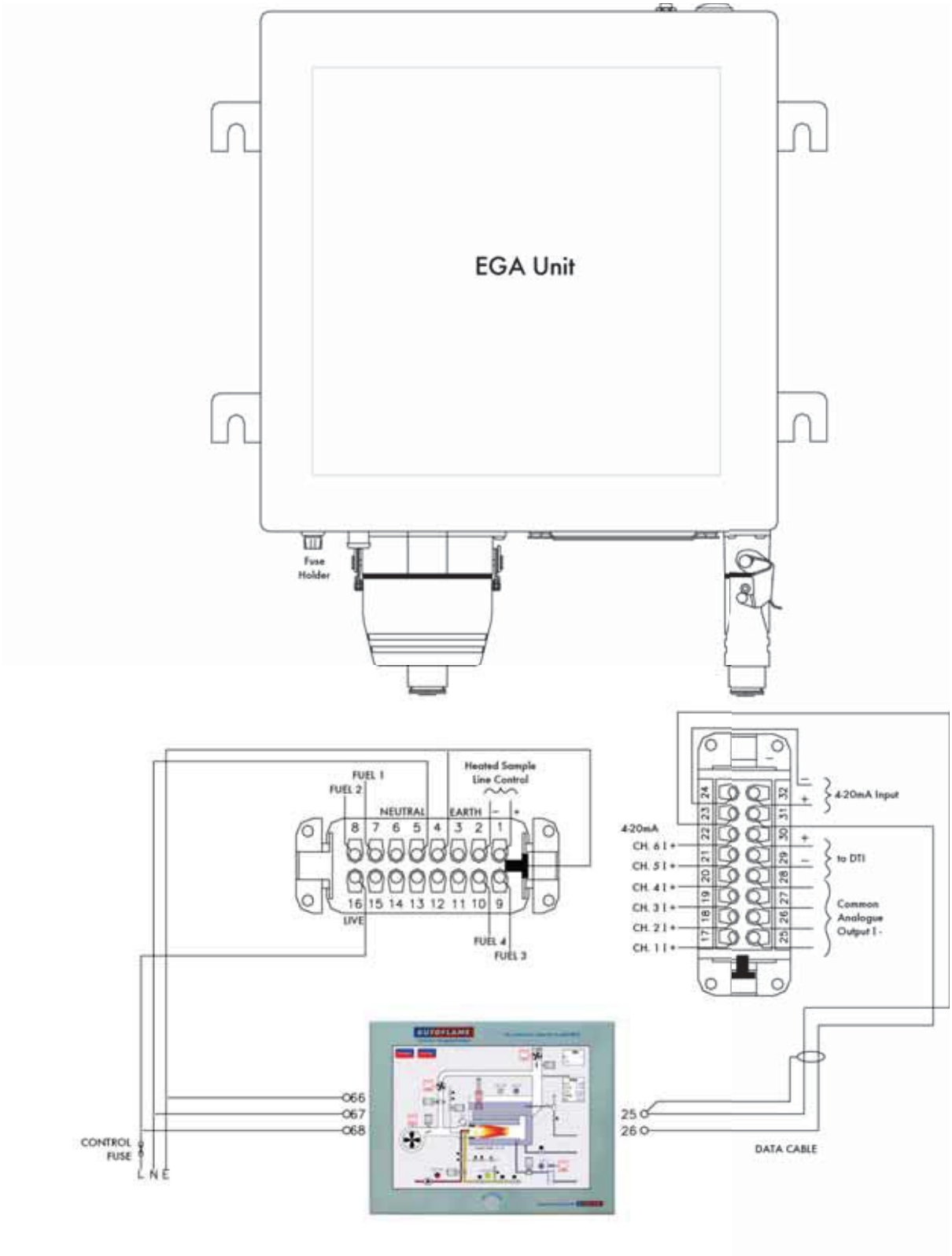

2.17.3.4 Sequencing Connection Diagram

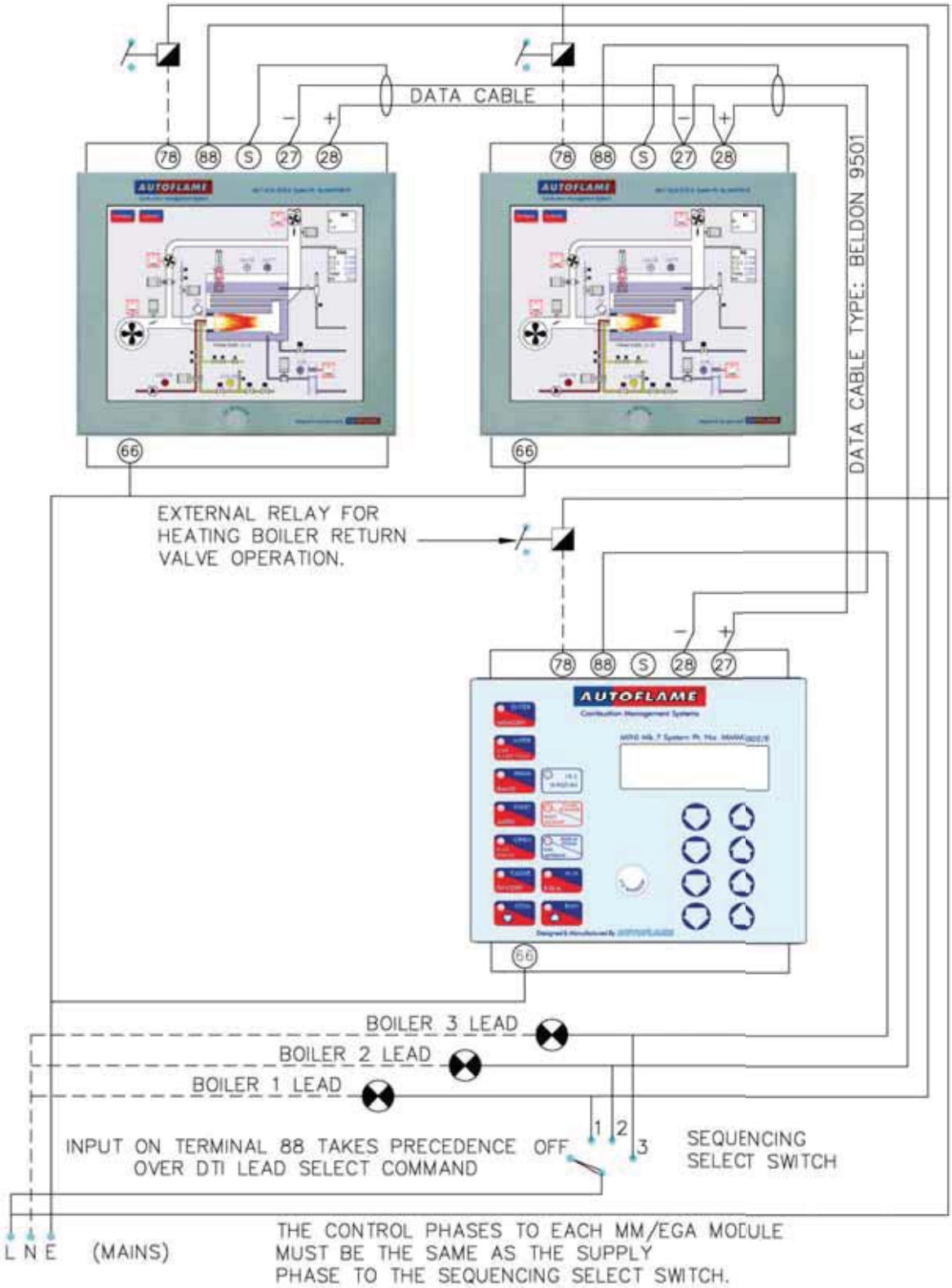

2.17.3.5 Connection Between Mk7 MM and O2 Interface module

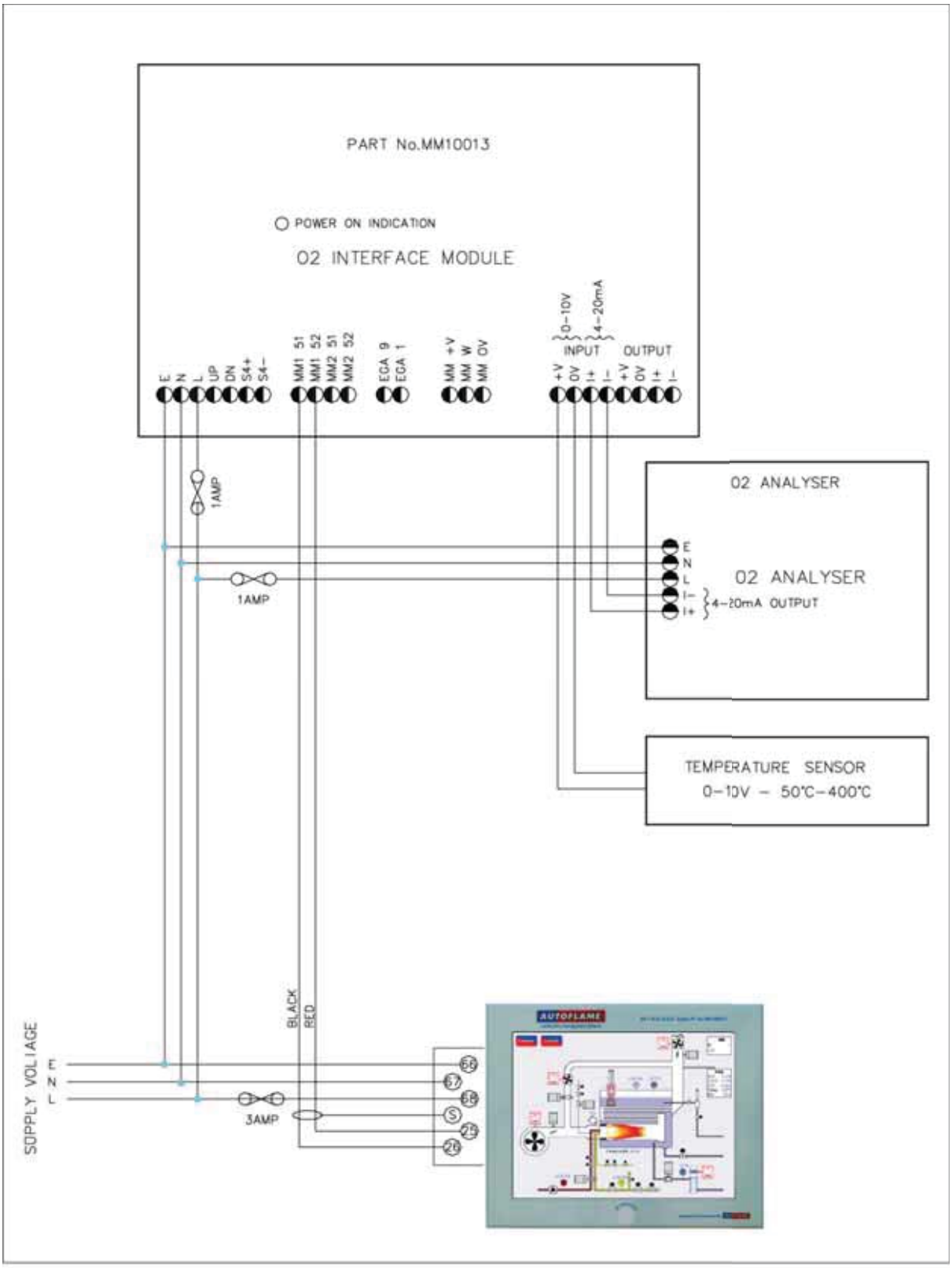

2.17.3.6 O2 Interface Module

The O2 interface module allows the use of an existing O2 sensor and in-situ probe to be used in conjunction with the Mk7 MM.

The O2 analyser is only measuring the O2 reading from the sensor and the exhaust gas temperature via a thermocouple mounted into the stack. It is important to note that the signal from the O2 sensor must be a 4-20mA and the thermocouple reading must be a 0-10V signal. These signals must be ranged as below:

O2 Reading:	4-20 mA = 0 – 20.9% O2
Thermocoupling Reading:	0-10V = 50C – 400C (122F – 752F)

Although the analyser is only measuring the O2 reading from the stack it is possible for the O2 interface module to extrapolate a CO2 value from the O2 sensor reading. These value can then be displayed on the M.M. facia (via the E.G.A. button) or via the D.T.I. on a PC or BMS interface.

Parameter 60 is used to set the operation of the O2 interface module.

If Parameter 60 is set to a value of 0 then the efficiency will be calculated from the exhaust temperature and CO2 value and this will be displayed on the M.M. facia. The CO reading will always be displayed as a zero value.

If Parameter 60 is set to a value of 1 then the CO, NO, exhaust temperature and efficiency will remain blank. If using the O2 interface module it is possible to use the limits for O2 readings and exhaust gas temperature readings.

2.17.3.7 EGA Trim Using A Variable Speed Drive (VSD)

When trim is set on Channel 5, changing options will make a difference between errors occurring or not. For the purposes of trim the Mk7 needs to know how the VSD will behave in terms of a change in the VSD input and its effect on the feedback (output) signal. This is why the VSD options 90 -97 must be set exactly i.e. input/output for voltage/current ranges and input/output for min/max frequency (Hz).

If the system is already commissioned and if any of the VSD drive input/output voltage/current ranges or input/output min/max frequency range are altered, re-commissioning will be necessary as the stored feedback values for each MM entered point will now be incorrect. These stored feedback values are used by the MM as the starting point for working out the expected feedback signal and whether trim on Channel 5 is optioned in or not.

2.17.4 FLAME SAFEGUARD

2.17.4.1 Burner Control Sequence Diagrams

Diagram Notes

If VPS is not optioned on the fuel selected, the VPS phases are bypassed.

Point idle:
This phase is set at power up when no fuel selected on exit from lockout.

Point recycle:
This phase is set on exit from firing and post purge if VPS has not operated after burner run.

Point post purge:
This phase is set only if post purge is optioned.

Point standby:
This phase is set if VPS has operated after burner run.

Normal lockout is reset when either the mains lockout reset input is set for 2 second or the front facia lockout reset button is pressed for 2 seconds.

Prolonged lockout reset/special lockout is set if either the mains lockout reset input lockout reset or front facia lockout reset input is set for 10 or more seconds. Normal lockout is set on exit from permanent lockout reset/special lockout after 20 seconds and is reset in the normal way.

Blue waveforms indicate required condition. Values above/below waveform are time in seconds that the state must be continuously incorrect after which a lockout is set. If the waveform is not bold then the status is not important.

2.17.4.1.1 Interrupted Pilot

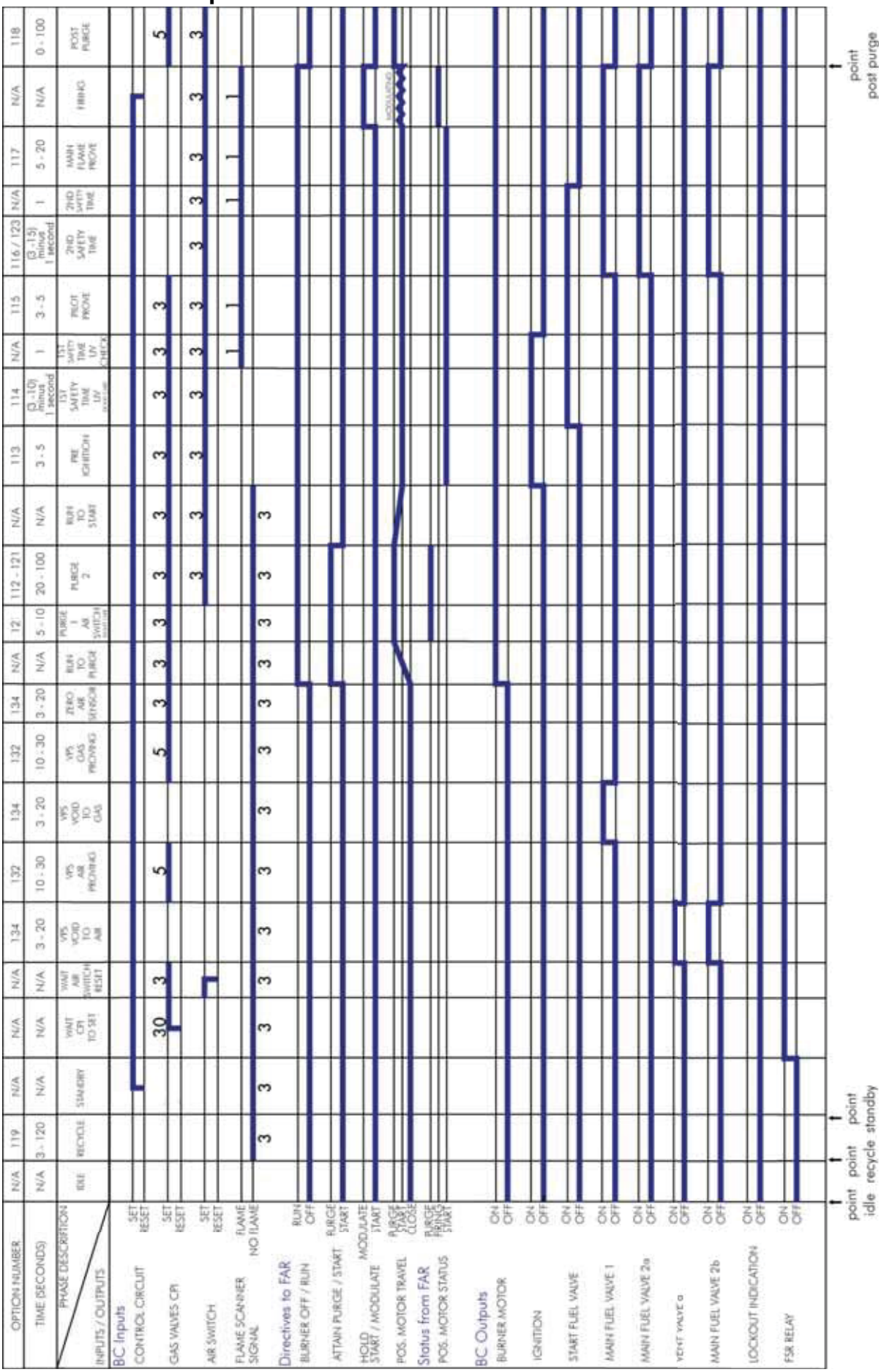

2.17.4.1.2 Intermittent Pilot

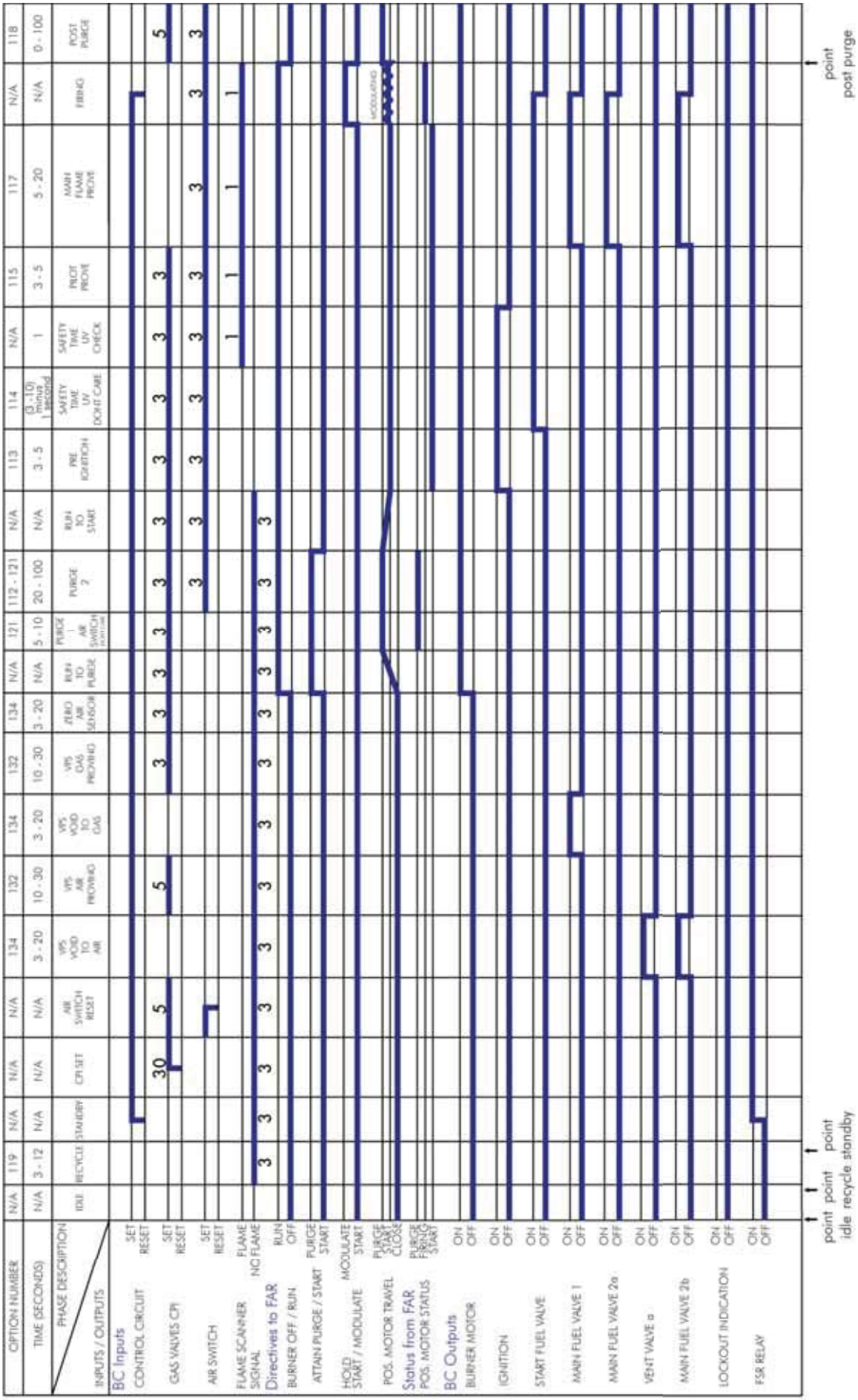

2.17.4.1.3 Lockout

OPTION NUMBER		N/A	N/A	N/A
TIME (SECONDS)		N/A	N/A	N/A
PHASE DESCRIPTION / INPUTS / OUTPUTS		NORMAL LOCKOUT	SPECIAL LOCKOUT	
BC Inputs				
CONTROL CIRCUIT	SET			
	RESET			
GAS VALVES CPI	SET			
	RESET			
AIR SWITCH	SET			
	RESET			
FLAME SCANNER SIGNAL	FLAME			
	NO FLAME			
Directives to FAR				
BURNER OFF / RUN	RUN			
	OFF		■	
ATTAIN PURGE / START	PURGE			
	START		■	
HOLD START / MODULATE	MODULATE			
	START		■	
POS. MOTOR TRAVEL	PURGE			
	START			
	CLOSE		■	
Status from FAR				
POS. MOTOR STATUS	PURGE			
	PRIOR			
	START			
BC Outputs				
BURNER MOTOR	ON			
	OFF		■	
IGNITION	ON			
	OFF		■	
START FUEL VALVE	ON			
	OFF		■	
MAIN FUEL VALVE 1	ON			
	OFF		■	
MAIN FUEL VALVE 2a	ON			
	OFF		■	
VENT VALVE a	ON			
	OFF		■	
MAIN FUEL VALVE 2b	ON			
	OFF		■	
LOCKOUT INDICATION	ON			
	OFF		■	
FSR RELAY	ON			
	OFF		■	

2.17.4.1.4 Post Burner Operation VPS

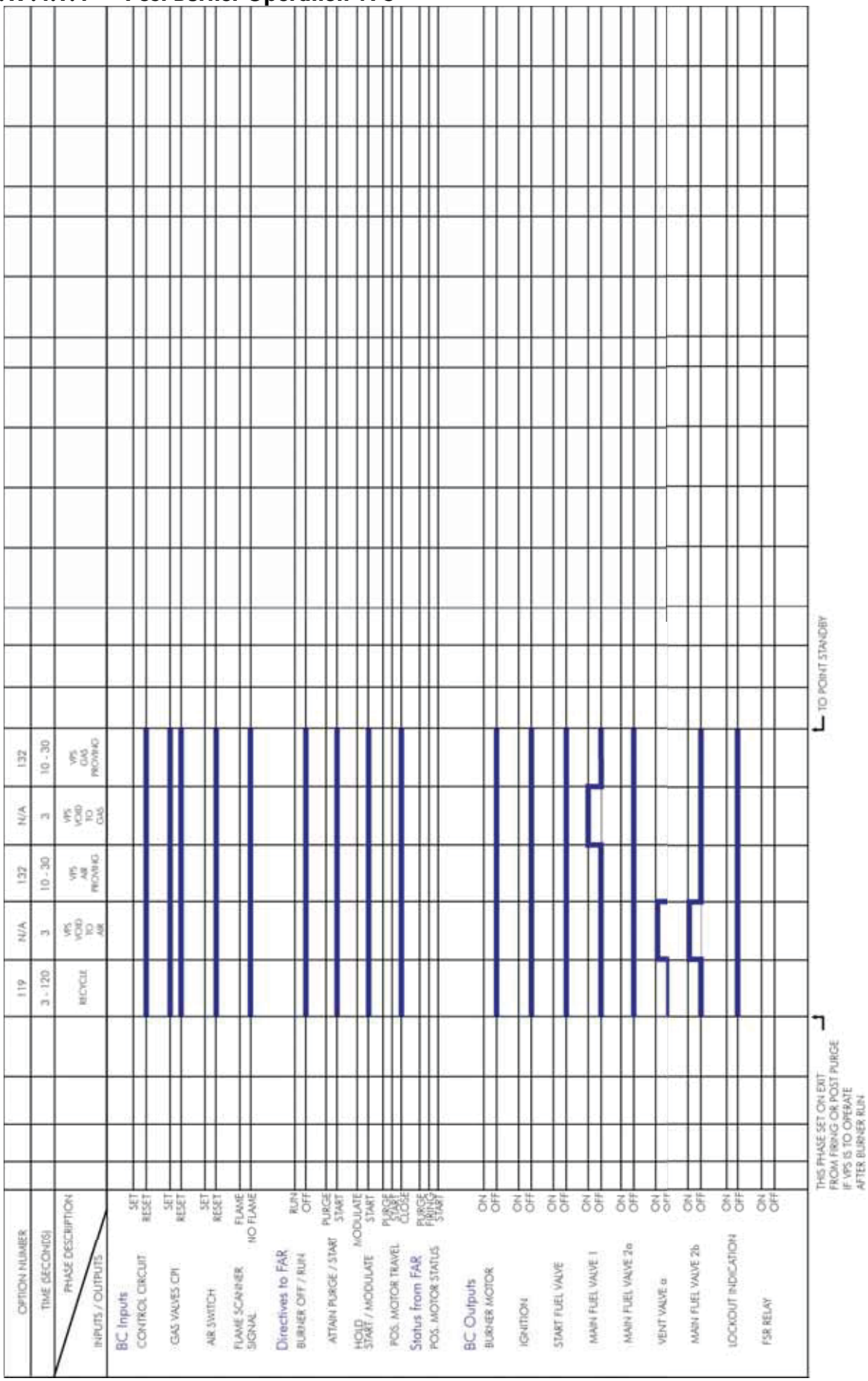

2.17.4.2 IR Self Check End View Scanner

Part Number : MM 70017

Maximum Operating Temperature - 60°C / 140°F

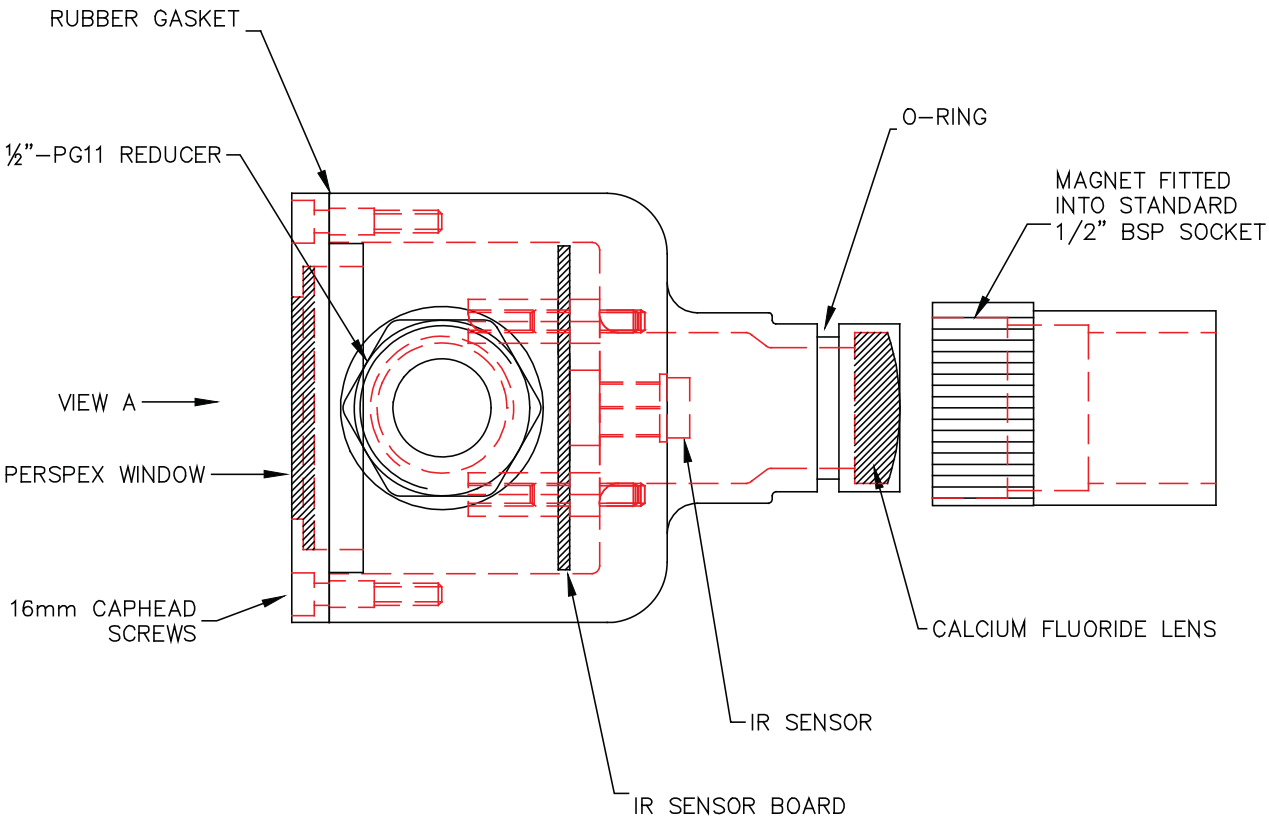

VIEW A

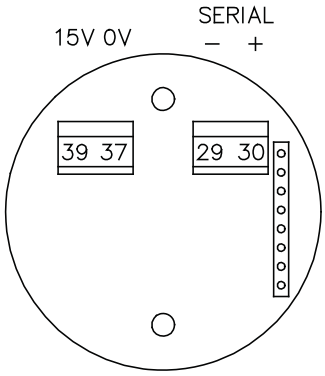

IR SENSOR BOARD

IP RATING	54
HOUSING	ALUMINIUM
POWER CONSUMPTION	POWERED BY EXTERNAL 15V DC SUPPLY
MOUNTING	ANY ORIENTATION SO THAT PHOTO TUBE FACES FLAME

2.17.4.3 Self Check UV Scanner

Part Numbers: MM 60003/HS

Maximum Operating Temperature 50°C / 122°F

Connections	
Red	Terminal 51
Blue	Terminal 50
Screen	Terminal S
Yellow	Terminal 21
Green	Terminal 22

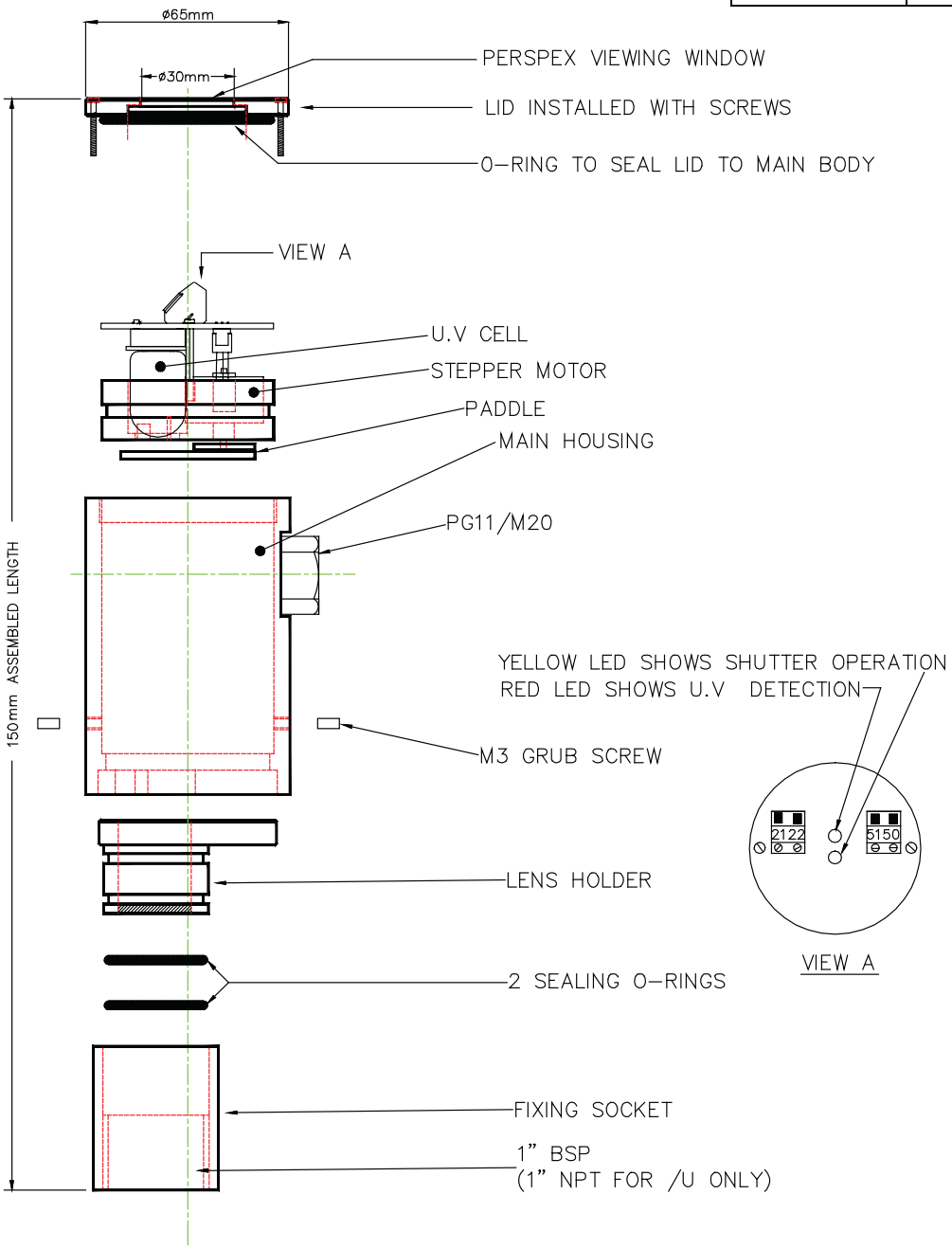

NOTE:

I.P. RATING	54
N.E.M.A.	5
POWER CONSUMPTION	MAX 0.5W
HOUSING	ALUMINIUM
MOUNTING	ANY ORIENTATION

2.17.4.4 Self Check Side View UV Scanner

Part number: MM60003/HS/SV

Maximum operating temperature - 50°C / 122°F

Connections	
Red	Terminal 51
Blue	Terminal 50
Screen	Terminal S
Yellow	Terminal 21
Green	Terminal 22

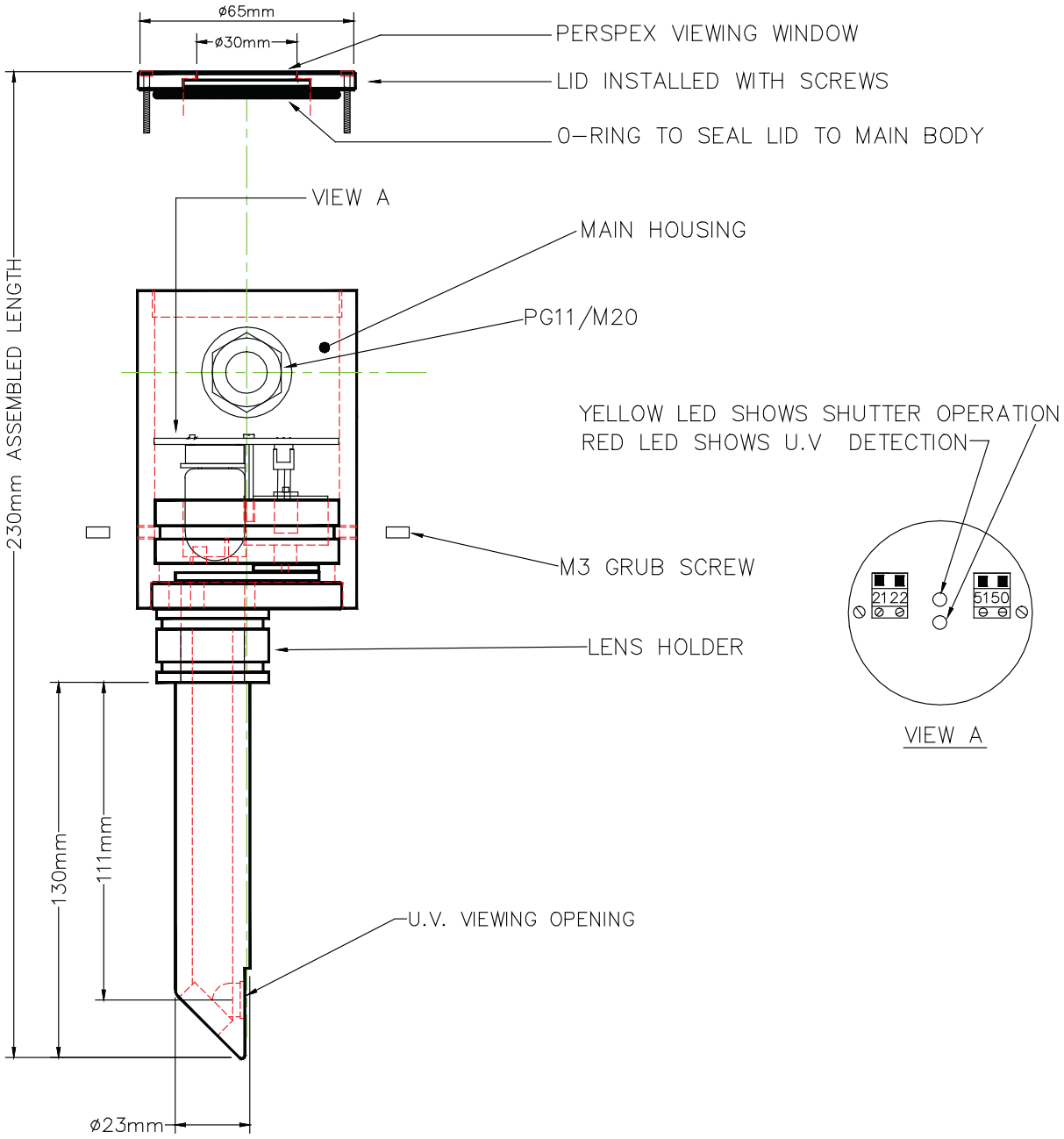

NOTE:

I.P. RATING	54
POWER CONSUMPTION	MAX. 0.5W
HOUSING & LID	ALUMINIUM
UV CELL	HIGH INTENSITY

2.17.4.5 Standard European Side Viewing UV Scanner

Part numbers: MM 60004

Maximum Operating Temperature - 60°C / 140°F

Connections	
Red	Terminal 51
Blue	Terminal 50
Screen	Terminal S

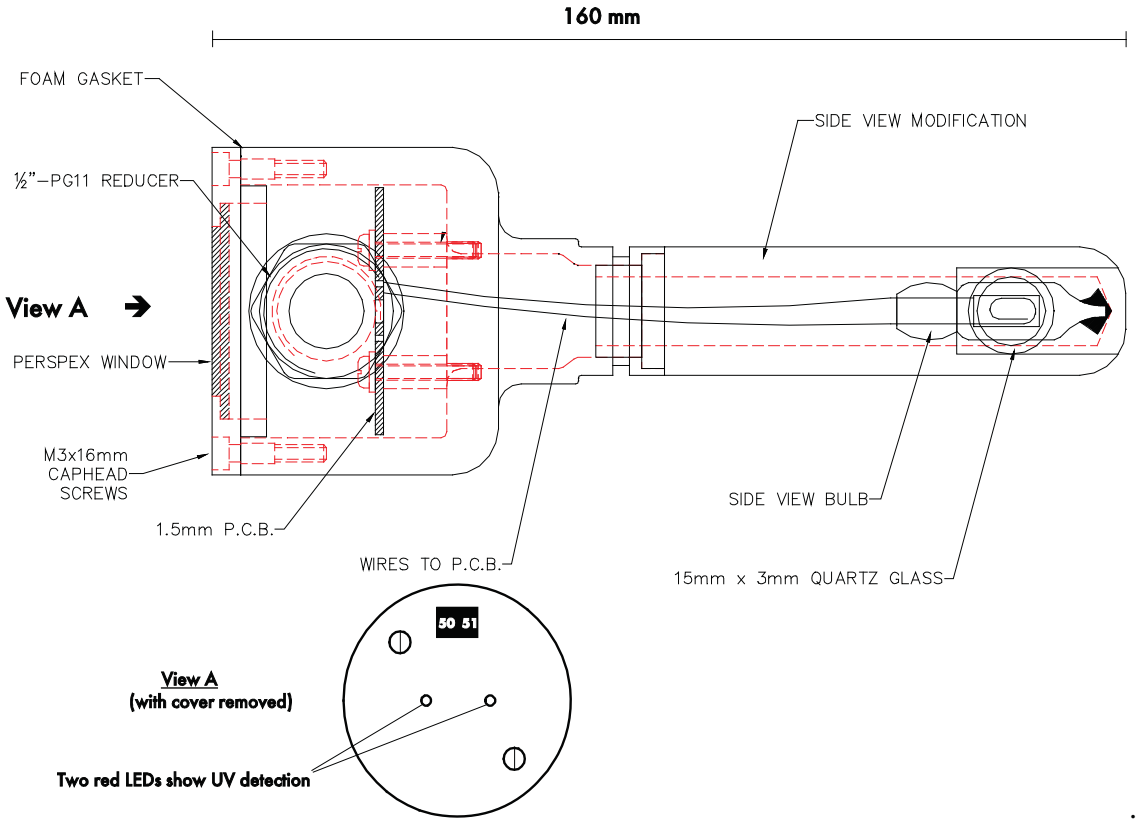

Note: If wired incorrectly a limited UV signal will be detected but the LED will not illuminate.

IP	54
NEMA	5
HOUSING	ALUMINIUM
POWER CONSUMPTION	POWERED BY MM
MOUNTING	ANY ORIENTATION SO THAT PHOTO TUBE FACES THE FLAME

2.17.4.6 Standard North American UV Scanner – End Viewing

Part numbers: MM60004/U
MM60004/HSU

Maximum operating temperature - 60°C / 140°F

Connections	
Red	Terminal 51
Blue	Terminal 50
Screen	Terminal S

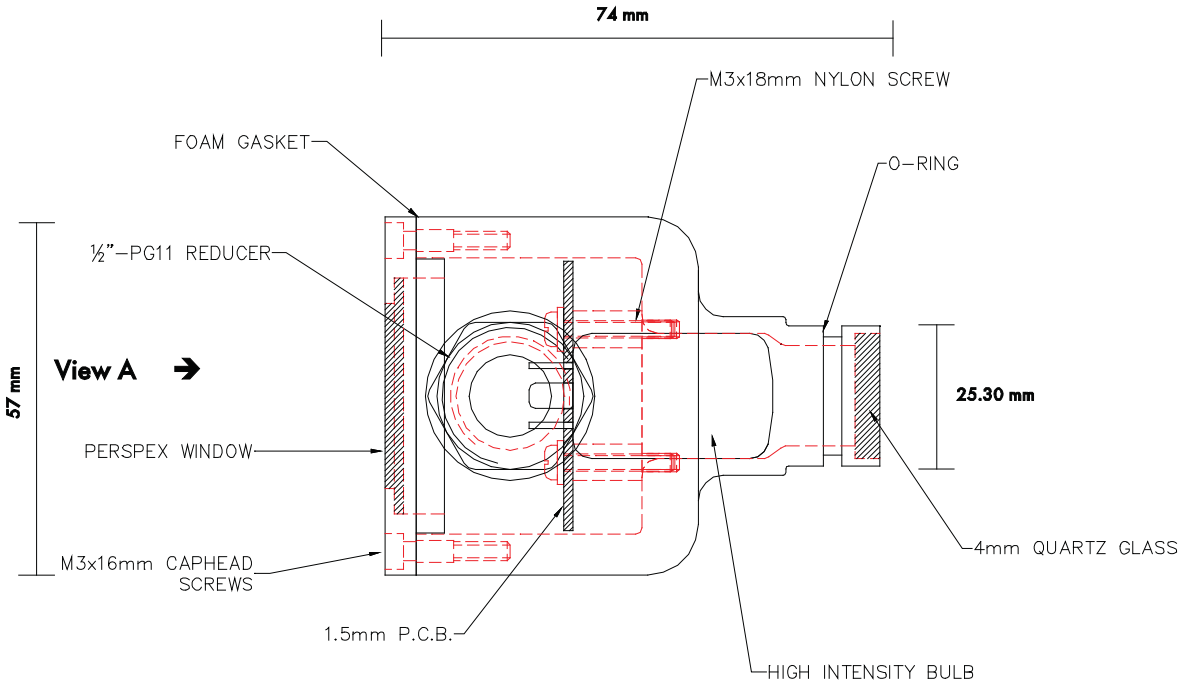

View A
(with cover removed)

Note: If wired incorrectly a limited U.V. signal will be detected but the L.E.D. will not illuminate.

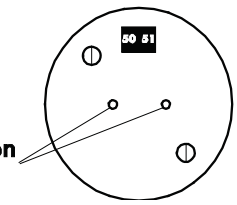

Two red LEDs show UV detection

NOTE:

I.P. RATING	54
NEMA	5
HOUSING	ALUMINIUM
POWER CONSUMPTION	POWERED BY MK.7 MM
MOUNTING	ANY ORIENTATION SO THAT PHOTO TUBE FACES FLAME

2.17.4.7 Selection Of UV Scanner Types

2.17.4.7.1 Normal Sensitivity

If the distance from the UV scanner to the flame is 500mm (20 inches), the normal sensitivity or UV scanner types may be used.

Normal Sensitivity Scanner Types

MM 60004	Standard Side View
MM 60004/U	Standard End View

The following considerations must kept in mind when selecting a UV scanner,

- Flame size
- Flame shape (dependent on the burner used)
- Flame intensity (a function of flame size and shape and fuel used)
- Flame obstructions

When the signal strength is low, a high sensitivity scanner type might be necessary for distances above 20 inches.

2.17.4.7.2 High Sensitivity

If the distance from the UV scanner to the flame exceeds 500mm (20 inches) a high sensitivity UV scanner type is recommended.

High Sensitivity Scanner Types

MM 60003/HS	Self Check End View
MM 60003/HS/SV	Self Check Side View
MM 60004/HS	Standard Side View
MM 60004/HSU	Standard End View

The maximum safe distance a UV scanner can be from a flame is dependent on

- The intensity of UV radiation emitted from the main flame and pilot flame
- The geometry of the combustion chamber and available space

This will vary between applications but the maximum distance allowed is 1500mm (6 ft) between a high sensitivity scanner and flame.

Note:

The above information is based on the results of tests conducted using a laboratory pilot flame supplied from a Bunsen burner of flame size 100x20mm.

2.17.4.8 UV Self Adaptive Pulse Width Modulation

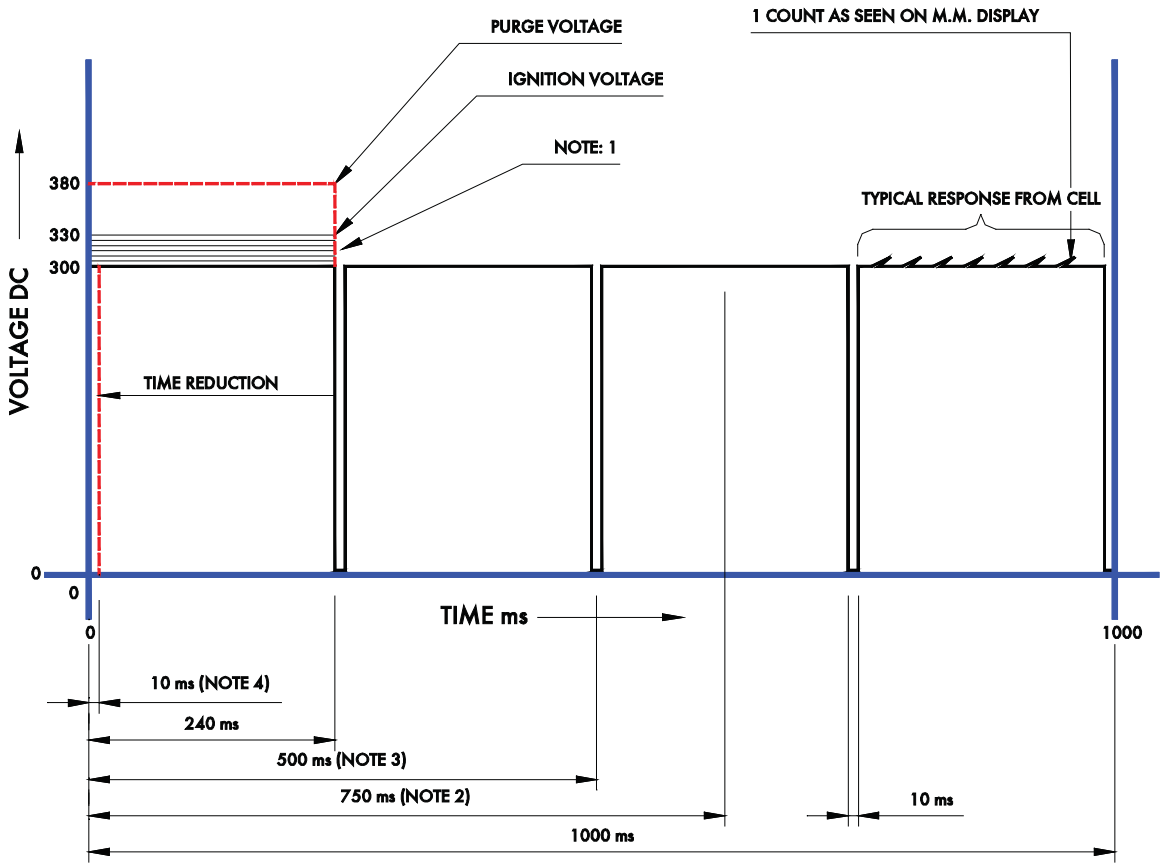

NOTE 1:
After first safety time voltage is reduced by 5 volts every 500ms. This is providing the flame signal is above the U.V. setpoint. If below the U.V. threshold, voltage will remain at 330 volts. The voltage will not increase during main flame operation.

NOTE 2:
If 5 counts or less have been detected over any 730ms period, the system will invoke a lockout. A short circuit between the two wires connected to the U.V. would produce 3 counts or less. This is the reason for nominating 5 counts as the lockout level.

NOTE 3:
During normal operation, 300 volts would be applied for a 240ms period after the second safety time. This is providing the U.V. signal is above the U.V. setpoint which is set at 25 counts. The setpoint cannot be adjusted.

NOTE 4:
If the UV count is above 25 counts then the the time voltage is applied to the UV sensor is decreased by 1 ms every 500 ms. This time is reducded until a minimum of 10ms has been reached. This helps preserve the life of the UV scanner as the time that voltage is applied to the scanner is reduced dramatically.

NOTE 5:
Every 500ms the recorded counts are averaged and displayed on the MM screen.

2.17.4.9 Dual UV and IR Scanner Operation.

Please contact Autoflame before use.

Dual scanner operation works by using a self-check IR scanner and a self-check UV scanner to detect the flame simultaneously. Each scanner works independently so that if one scanner fails to see a flame when there should be a flame but the other scanner still sees a flame the Mk7 will lockout on no flame signal. The same goes for a simulated flame lockout only one scanner has to see a flame when there should not be a flame for the Mk7 to lockout. Dual scanner operation is designed to give extra safety to the flame detection system by there being a second scanner to verify that the other scanner is working correctly and is detecting a flame correctly in addition to the self diagnostics built into the Mk 7. Both scanners work independently in detecting a flame signal so it is not required that the two scanners have to read the same flame signal strength. It is recommended that that a good flame signal is found on both scanners to ensure reliable operation of the dual scanners.

To enable dual scanner operation Option/Parameter 122 should be set to 3. Also ensure that Option/Parameter 111 is set to 1 for self-check operation of the scanners. There are no special wiring requirements needed the IR and UV scanners should be connected to the Mk7 as normal.

Dual scanner operation is currently only approved for use in Australia by the AGA.

2.17.4.10 Flame Detection Using An External Flame Switch

To configure operation with a flame switch Option/Parameter 122 must be set to 1.

The operation of Terminals 85 and 86 must be as follows:

When the flame switch is indicating no flame, the voltage on Terminal 85 must be 0Vac, and the voltage on Terminal 86 must be mains voltage (110/230Vac).

When the flame switch is indicating the presence of a flame, the voltage on Terminal 85 must be mains voltage (110/230Vac), and the voltage on Terminal 86 must be 0Vac.

Terminal 85 is the functional input for detecting the flame.

Terminal 86 is solely for the purpose of checking that Terminal 85 is operating correctly.

Terminal 86 must seen to be the inverse of Terminal 85, i.e. if Terminal 85 is at 0Vac, terminal 86 must be at mains voltage and if Terminal 85 is at mains voltage, Terminal 86 must be at 0Vac.

If Terminal 86 does not follow the inverse of Terminal 85 the following lockout will occur - Terminal 86 inverse.

2.17.4.10.1 Flame Switch Configuration

Within the M.M. there is a latency of 250 milliseconds on the monitoring of Terminal 85. To ensure a 1 second overall flame failure response time, it is essential that the response time of the flame switch is set to no more than 750 milliseconds.

Flame switches often provide a volt free change over contact to indicate the flame status. Alternatively, they may provide a pair of `inverse' outputs. If the flame switch only provides a single output terminal, a relay will have to be installed between the flame switch and the M.M. to provide a set of volt free changeover contacts.

2.17.5 ERROR CHECKING, DIAGNOSTIC CODES, FAULT ANALYSIS

Self Diagnostic Fault Identification Software

The "Error Checking" software, which is included in every M.M. E.G.A. module, continually interrogates the system for component or data handling failure. This intensive self checking programme is inflicted on all peripherals such as positioning motors and load detectors as well as the main M.M./E.G.A. system hardware. The safety related areas, both hardware and software, have been examined and accepted for CE, UL, FM and TUV.

Any error identified by the system is indicated by "ERROR" being displayed and the relevant error number. In the case of E.G.A. related faults, "ERROR EGA" is displayed with the corresponding error identification code.

To reset an MM error the unit must be reset. All other errors can be reset by pressing the 'Reset' button for three seconds.

2.17.5.1 Key to Errors

ERROR – confirms that an error has been detected in the MM System.

Error Fault Type	Code No	
CH1 Positioning Error	01	Check wiring & motor (Voltage should be between 0.21V and 3.6V)
CH2 Positioning Error	02	
CH3 Positioning Error	08	
CH4 Positioning Error	09	
CH1 Gain Error	41	Check wiring & potentiometers are zeroed correctly
CH2 Gain Error	42	
CH3 Gain Error	43	
CH4 Gain Error	46	
CH5 VSD Error	80	CH5 variable speed drive error
CH6 VSD Error	81	CH6 variable speed drive error
CH5 VSD Feedback Error	83	CH5 variable speed drive feedback signal different to commissioned values
CH6 VSD Feedback Error	84	CH6 variable speed drive feedback signal different to commissioned values See section 2.17.2.12
Load Detector	03	Open circuit on load sensor
12V/5V Supply Error	44	Internal 5V/12V supply outside limits. Check 12V on Terminals 40 & 41
Gas Sensor Re-commission Error	GAS RECOMM	Reset Option/Parameter 150 back to 0 and reset Options/Parameters 136/137 back to original values

Error Fault Type	Code No	
Air Sensor Re-commission Error	AIR RECOMM	Reset Option/Parameter 150 back to 0 and reset Option/Parameter 147 back to original value
Watchdog - Error CR2	45	Unit hardware failure Option/Parameter 110 is set to 0
A/D Converter Error	47	Check 12V supply on terminals 40, 41
Twin Burner Communications Failed	100	Flashing error – no communications between the MM units
Air Pressure Outside Limits	82	During run mode actual air pressure outside limits, commissioned +/- 0.3 "wg (see Option 147)
Gas Pressure Sensor MM60008 optioned together with psi units	110	See options 124 & 133 to 137. PSI display cannot be chosen for this sensor range
WL probes detected WL not optioned Check WL configure	251	Water level probes are detected but the MM is configured for operation without the water level. Check the second password screen

2.17.5.2 Burner Control Lockouts

Lockout Message	Cause
CPI input wrong state	Proof of closure switch opened during ignition sequence Check Terminal 55 and proof of closure switches (CPI = close position interlock / proof of closure)
No air proving	No air pressure during start/firing Check Terminal 54 and air switch
VPS air proving fail	Leak detected during 'air proving' part of VPS Check 1st main valve
VPS air zeroing fail	When valve C opens, zero value outside limit +0.5 to -1.0" wg Check vent valve
VPS gas proving fail	Leak detected during 'gas proving' part of VPS Check 2nd main valve and vent valve Check pilot valve if using single pilot operation (Option 130)
VPS gas pressure low	Gas pressure below minimum application pressure Check Option 136 for minimum allowable pressure
No flame signal	No flame signal during ignition/firing

Lockout Message		Cause
Simulated flame		The flame is present when it should not be. Call for service immediately. This is potentially a dangerous condition.
Fail safe relay fault	57	These terminals are self checked within the Mk.7 If a voltage is detected when the output is off (and vice versa) a lockout occurs.
Vent valve output fault	62	
Main gas output 1 fault	61	
Main gas output 2 fault	60	
Start gas output fault	59	
Motor output fault	58	
Ignition output fault	63	
Shutter fault		UV signal detected during shutter operation on UV self check Check wiring on Terminals 21/22
Prolonged lockout reset		Prolonged voltage present on Terminal 56/lockout reset button permanently pressed
No CPI reset		Proof of closure switch not made after valves closed after firing Check Terminal 55 and proof of closure switches
Gas pressure low limit		Gas pressure low limit exceeded when using a gas sensor Check Option 136
Gas pressure high limit		Gas pressure high limit exceeded when using a gas sensor Check Option 137
Gas pressure low		Low gas pressure before start up
UV short circuit		Connections to UV tube shorted
IR Scanner comms timeout		IR scanner optioned but no IR scanner communications detected. Check wiring and fuse 6(500 mA)
Oil pressure low limit		Oil pressure low limit exceeded when using an oil sensor Check Option 139
Oil pressure high limit		Oil pressure high limit exceeded when using an oil sensor Check Option 140
Purge air pressure low		Insufficient air pressure during purge Check Option 141
Option #141 incorrect		Option 141 is set without Option 148
Freeze timeout		Pilot turndown test time exceeded (10 minutes) See section 2.17.2.17

Lockout Message	Cause
Watchdog fault 1a Watchdog fault 1b Watchdog fault 1c Watchdog fault 1d Watchdog fault 2a Watchdog fault 2b Watchdog fault 2c Watchdog fault 2d	Internal fault diagnostics – contact Autoflame and report code displayed.
RAM test failed Prom test failed CPU test failed Input fault BC input short Lockout 198, 199, 200, 201, 202	Internal fault diagnostics – contact Autoflame and report code displayed.
Terminal 86 inverse	Terminals 85/86 both have an input or Terminals 85/86 both do not have an input when using the flame switch or IR sensor operation- see Option 122.
Terminal 85-86 fault	Electronics fault on either Terminal 85 or 86.
Prove CCT fail	Loss of input on Terminal 52. Terminal 52 must see an input at all times from the position to purge to the end of the post purge (CCT = closed circuit).
Option 118 incorrect	If using the NFPA post purge (Option 135 = 2) then Option 118 must have a setting of 15 or above.
Boiler DP proving	If using boiler differential proving (Parameter 92 = 2), and the input on Terminal 85 is reset then this lockout will occur.

Gas Sensor Related

Sensor supply voltage	12V supply to sensor outside limits (11.75 - 12.25V)
Zero low gas sensor	see section 2.17.2.6.2 for zero limits
Zero high gas sensor	see section 2.17.2.6.2 for zero limits
Excessive VPS Operations	VPS has operated 3 times without burner firing
Signal dev - gas sensor	redundant signals from sensor do not match
Counts low - gas sensor	sensor fault - stuck on signal value
Counts high - gas sensor	sensor fault - stuck on reference value
Signal high - gas sensor	gas pressure exceeds maximum range value
Gas sensor (+ number)	sensor/Mk7 internal fault - report to Autoflame

Air Sensor Related

Sensor supply voltage	12V supply to sensor outside limits (11.75 - 12.25V)
Zero low air sensor	lower limit is -1.0”w.g.
Zero high air sensor	upper limit is +0.5"w.g.
Signal dev - air sensor	redundant signals from sensor do not match
Counts low - air sensor	sensor fault - stuck on signal value
Counts high - air sensor	sensor fault - stuck on reference value
Signal high - air sensor	air pressure exceeds maximum range value
Air sensor (+ number)	sensor/Mk7 internal fault - report to Autoflame

The “Error Checking” software, which is included in every M.M. module, continually interrogates the system for component or data handling failure. This intensive self checking programme is inflicted on all peripherals, e.g. positioning motors/load detectors as well as the main M.M. system hardware. The safety related areas, both hardware and software, have been examined and accepted for CE, UL, FM and TUV.

2.17.5.3 Troubleshooting Guide

2.17.5.3.1 Gas/Air sensor Diagnostic Codes

To view diagnostics codes, the MM must be in Mk6 mode.

They are shown at the bottom of the

display if Parameter 83=1.

Example:

Gas	43	1001
42	42	1000
Air	50	969
51	51	970

Explanation:

	Average Signal	Pressure Signal	Reference Signal	
Gas {	Gas	43	1001	Sensor Channel 1
	42	42	1000	Sensor Channel 2
Air {	Air	50	969	Sensor Channel 1
	51	51	970	Sensor Channel 2

Typical reference signals are 1000±14. If the reference signal values display 0 or are blank then the sensor is wired incorrectly.

Each sensor has two channels. Each channel gives out two values- a pressure signal and a reference signal. The values displayed are 'digitised' signals (range 0-1023). The two pressure signals should be the same. The two reference signals should be the same.

If the two pressure signals are different by more than 10 the averaged value will show 01 and not the average of the two signals.

With no pressure applied to the sensor the pressure signal value should be between 20 and 60 (typically 40 to 50). If the reading goes below 5 then an error will occur due to a negative pressure on the sensor.

Note: These values are only displayed once the burner has been commissioned.

2.17.5.3.2 UV Shutter Faults

UV shutter fault– there are two LED's on the back of the self-check UV. The red LED indicates the presence of a flame, the yellow LED indicates shutter operation. The red LED will flicker in the presence of UV light. Every 60 seconds the yellow LED will come on, indicating that the shutter is closing. The red LED should then extinguish briefly. If this is not happening check the wiring to self check UV sensor:

Green wire = Terminal 22
Yellow wire = Terminal 21
Blue wire = Terminal 50
Red wire = Terminal 51

2.17.5.3.3 UV Problems

If the red LED's fail to illuminate but the burner operates, the flame signal will be reduced. It is likely that the 2 wires are crossed. This must be corrected. Once corrected a full flame signal strength will be displayed/registered.

The Autoflame UV software utilises early spark termination within the internal flame safeguard control. Therefore, detection of the ignition spark is allowed. During start-up the ignition is de-energised and the pilot flame must be proven without the spark before the main fuel valves are open (safety shut off). Due to the above statement it is not necessary to have a sight tube on the UV for pick-up. This, in fact, will drastically reduce the flame pick-up.

If insufficient UV is detected, it is advised to use a swivel mount assembly (UVM60003/UVM60004) in order to obtain maximum pick-up. This will allow the commissioning engineer to reliably sight the UV for optimum performance and trouble free operation.

Note: Under no circumstances is a non-Autoflame UV scanner permitted to be used. This is in breach of all codes and approvals associated with the Autoflame combustion management system. This may lead to serious equipment damage, critical injury or death.

If a non-Autoflame scanner is required then please contact Autoflame directly for technical support.

2.17.6 THE PID CONTROLLER

2.17.6.1 Introduction

The standard control algorithm used by Autoflame to control the fuel/air ratio is a PID controller; Proportional-Integral-Derivative controller. The control algorithm compares the actual measured temperature or pressure and compares it to the user specified setpoint temperature or pressure. Depending on the measured and setpoint values, the controller will then either modulate the burner up (increase) or down (decrease). The rate of change or speed of the burner modulation in relation to changes in measured temperature or pressure is dependent on the settings of the PID controller as stated in the Options and Parameters sections.

The PID controller action is the sum of the "Proportional" + "Integral" + "Derivative" actions of the PID controller. Each contributes to how the controller modulates the burner and each operates as outlined below.

2.17.6.2 Proportional Band

The Proportional term is specified in Option 6 by defining the "Proportional band" (P.B.). The P.B. is simply an offset from the setpoint pressure or temperature. Outside and below the P.B., the controller will modulate the burner at maximum flame, upon reaching the P.B., the controller will modulate the burner linearly down (see Option 6).

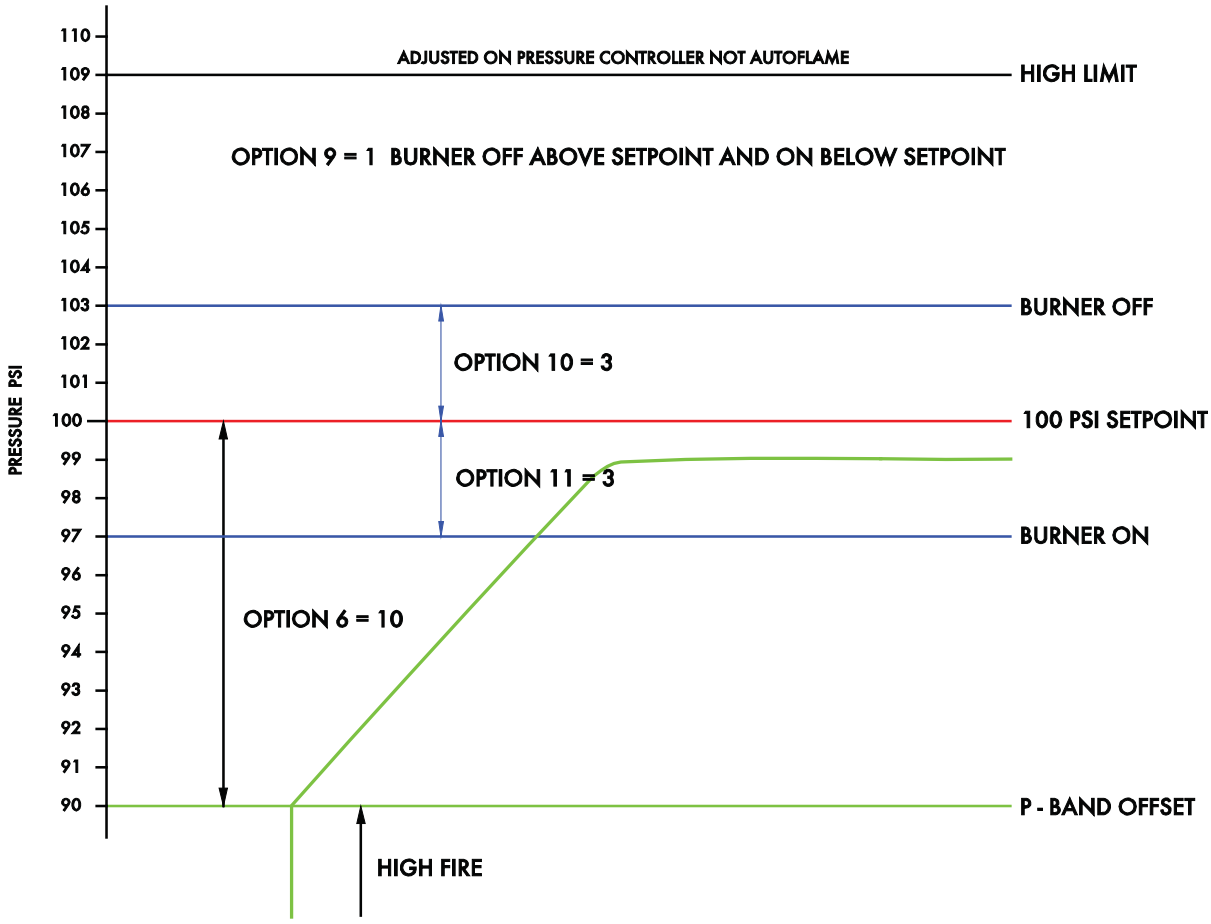

2.17.6.3 Integral Control

The Integral term is specified in Option 7, where the "Integral time", also known as "Reset time", is set. Within the Proportional Band, the integral term has the effect of increasing or decreasing the burner by a specific amount every "n" seconds. The amount the firing rate is adjust by is specified in Parameter 106, default is 10% of the difference between the measured and setpoint temperature or pressure values, and the time period this amount is added; every "n" seconds; "n" is specified in Option 7, default is 60s.

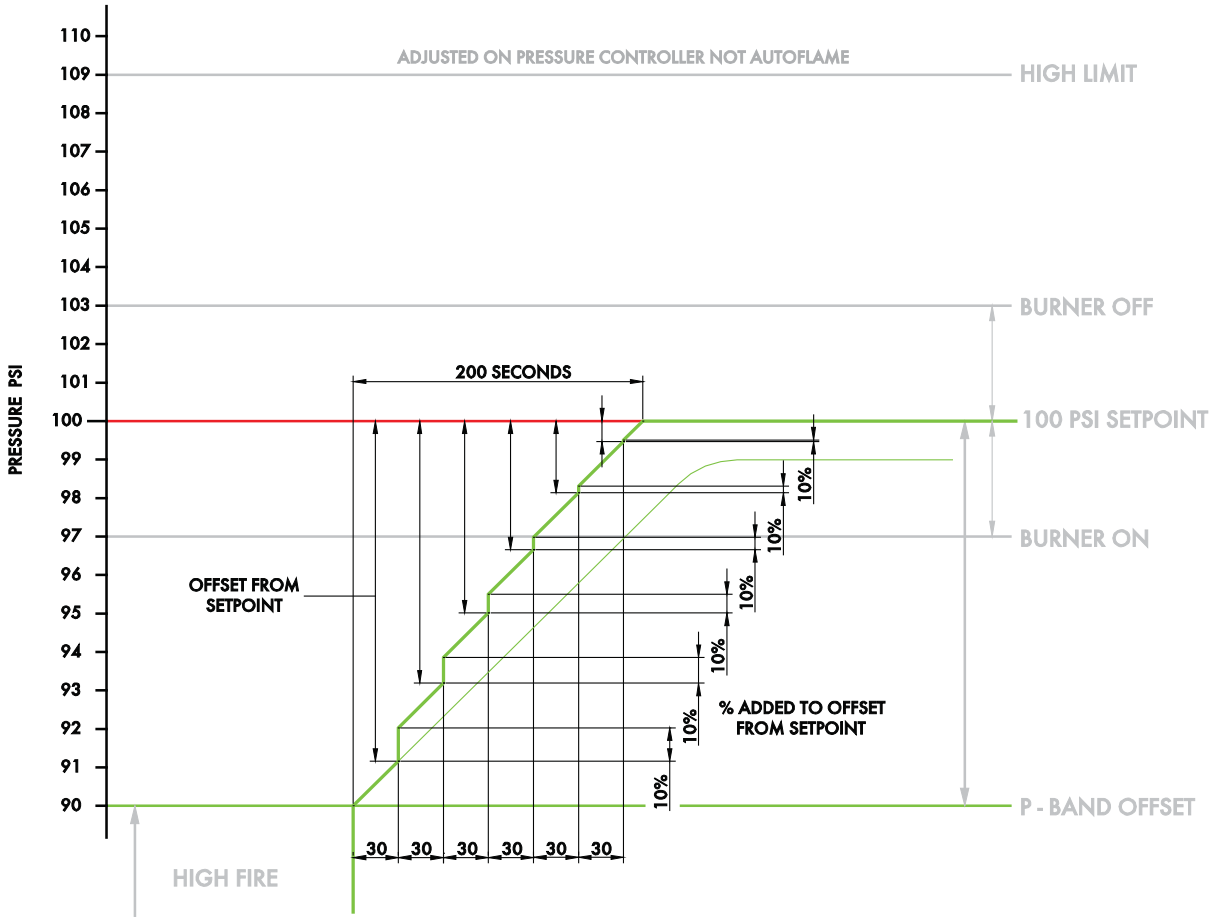

OPTION 7 = 30 SECONDS INTERGRAL TIME
PARAMETER 106 = 10% AMOUNT OF ADDED OFFSET

2.17.6.4 Derivative Control

The Derivative term of the control system analyses the rate of change in the difference between the measured and set point temperature or pressure. Derivative specific options are set in Option 37, 38 and 39. The time interval over which the compared and measured temperature or pressure values are taken is set in Option 37, the derivative dead-band or margin above and below the required set point in which no derivative action occurs is set in Option 38, and the response sensitivity as a percentage of firing rate increase or decrease is defined in Option 39.

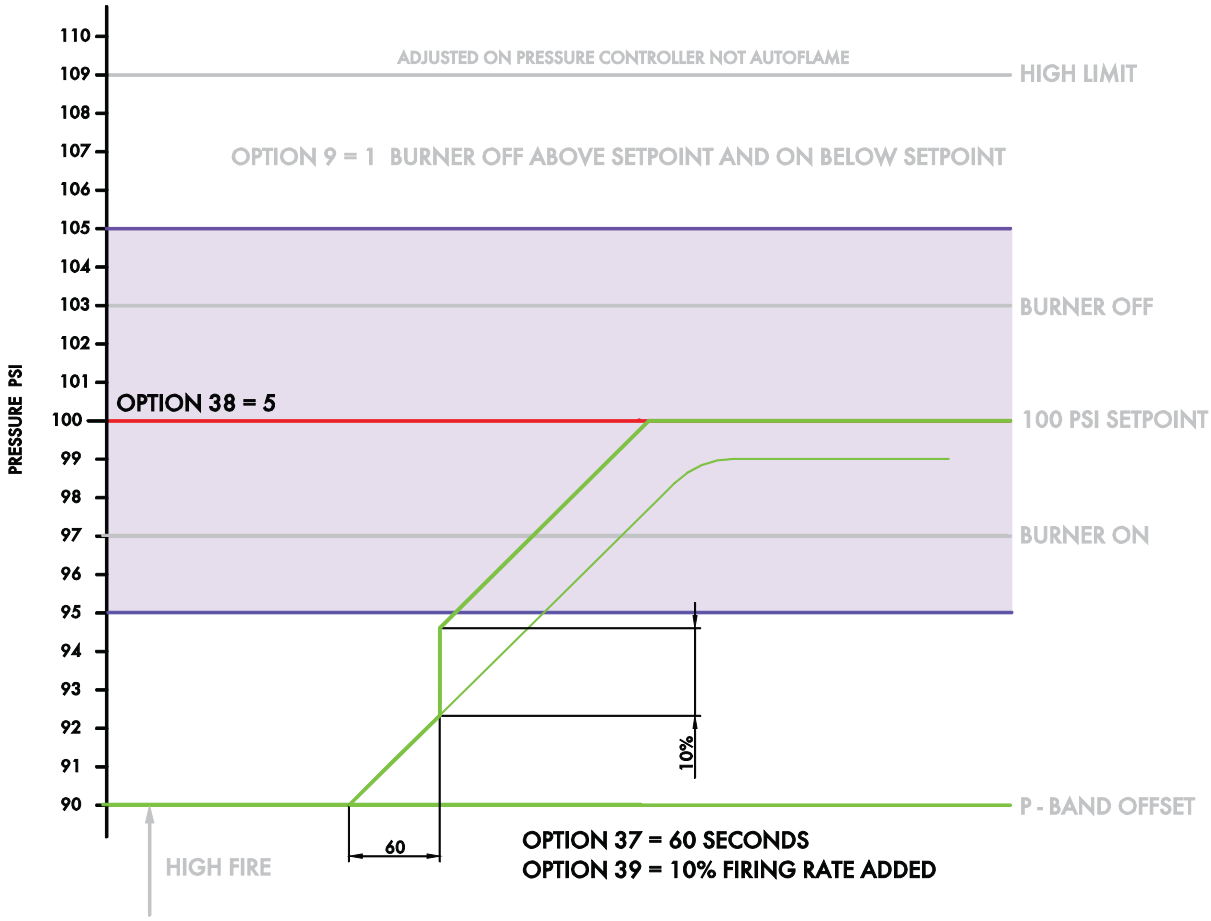

NOTE: The derivative action occurs at all points outside of the deadband. This includes outside of the proportional band.

2.17.6.5 PID Controller Considerations

The majority of applications can be controlled adequately using just the Proportional and Integral settings; a PI control setup. By default, the Derivative term is set to zero. This is due, in part, to the aggressive nature this term can have on the control action which makes it suited to a small number of combustion processes.

Modification to the settings governing the Autoflame control system should only ever be carried out by qualified combustion engineers. Changes to the Autoflame control system setup has the potential to make the controller operate in an unstable and potentially unsafe manner.

2.17.6.6 Super "I"

The advantage of the standard PID was that it was very easy to set up and that in 99% of applications it worked incredibly well.

Recently one or two applications have presented themselves where the above control form does not carry enough "I" to achieve a response that enables the control to lock on to the required value.
The applications that have required additional "I" control have been water tube boilers where there is a high proportion of heat transfer surface to water volume which results in a low thermal inertia and therefore the need for a more dynamic control response.

A radical solution to this is the control form we have labelled "Super I" to differentiate this from the existing P+I control. The "Super I" has the following adjusters and set up features.

1) Deadband – this is accessed via Parameter 105. The range is 0 -10 and this can be adjusted in increments of 1.0. The range of 10 would apply to 10°F, 10°C, 10 psi or 1.0 bar.

2) "I" Offset – this sets the point at which the "Super I" control algorithm is put into operation. The adjustment of this "I" control setting can be accessed via Parameter 102. The range is 1 to 50. The default value is zero which turns off the "Super I". The range can be up to 50°C, 50°F, 50 psi or 5.0 bar. The incremental adjustment of this "I" value is 1 (i.e. 1°C, 1°F, 1 psi or 0.1 bar).

3) Speed of integration – the range available in 0-30 seconds. There is no default value. The adjustment of this "I" control setting can be accessed via Parameter 103. The adjustment of the speed of integration is in 1 second increments.

4) Amount of integration as a degree angular increment – the range of this adjustment is 0 to 5 degrees angular rotation. The range increases in increments of 0.1 degrees angle. The adjustment of this "I" control setting can be accessed via Parameter 104.

NOTE : Please note that the standard PI algorithm turns off its own "I" component when it meets the "Super I" band. Please see the graphical example which sets out to show the interaction between the original P+I control and the additional "Super I" algorithm.

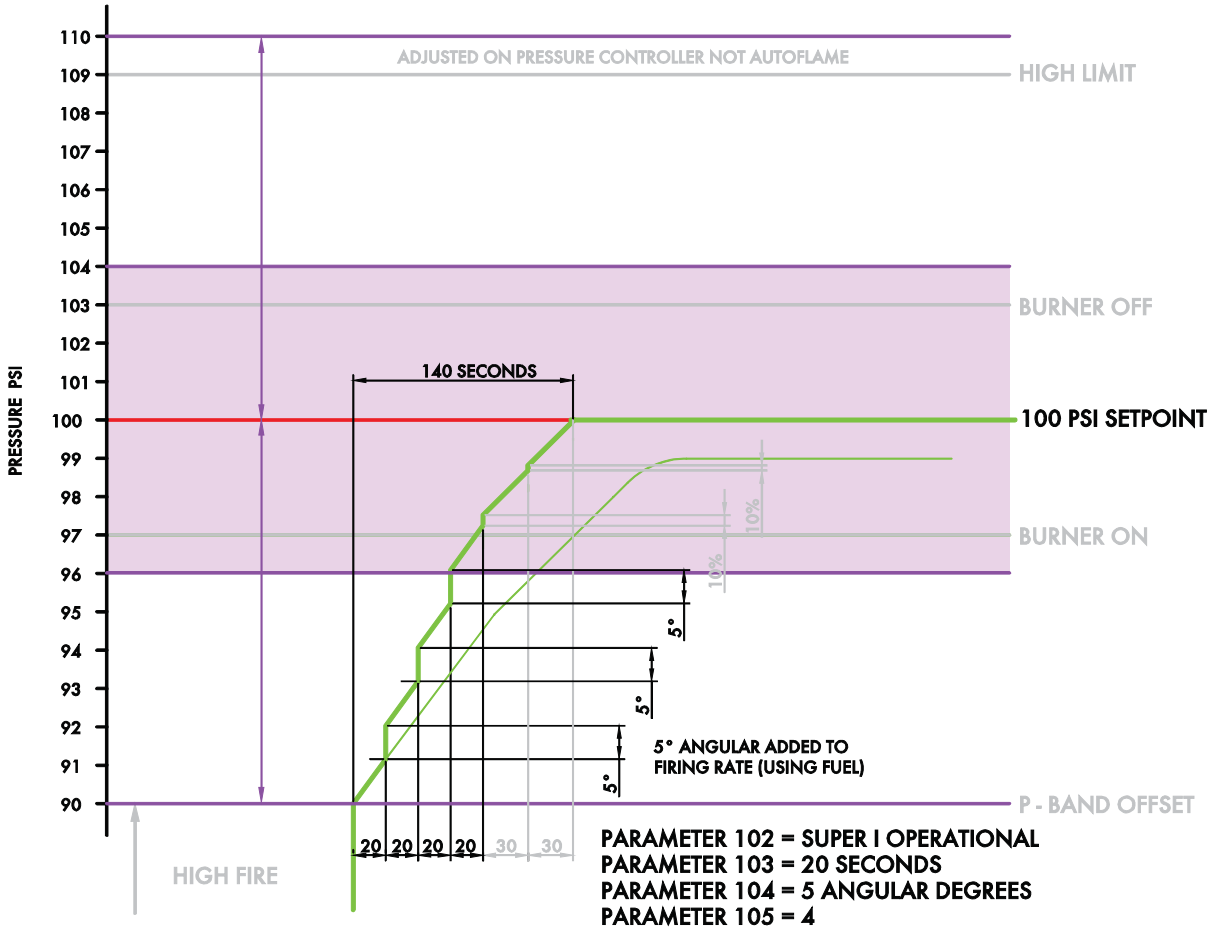
PRESSURE PSI
110
109
108
107
106
105
104
103
102
101
100
99
98
97
96
95
94
93
92
91
90
ADJUSTED ON PRESSURE CONTROLLER NOT AUTOFLAME
HIGH LIMIT
BURNER OFF
140 SECONDS
100 PSI SETPOINT
10%
BURNER ON
10%
5°
5°
5°
5° ANGULAR ADDED TO
FIRING RATE (USING FUEL)
P - BAND OFFSET
20
20
20
20
30
30
HIGH FIRE
PARAMETER 102 = SUPER I OPERATIONAL
PARAMETER 103 = 20 SECONDS
PARAMETER 104 = 5 ANGULAR DEGREES
PARAMETER 105 = 4

2.17.7 INTERACTING WITH THE MK7 INTERFACE

2.17.7.1 Commissioning Mode

To access commissioning mode select the

button on the bottom left hand side of the loading screen. Then enter the password in the calculator display for channel 1 and 2 pressing

after each followed by

. If any mistakes are made whilst entering the password then the password can be changed before its entered by using the 'Del' key on the calculator display. If the password has been entered then you can bring up the calculator display for that channels password by pressing the relevant channel password. This will take you into the commissioning mode display below.

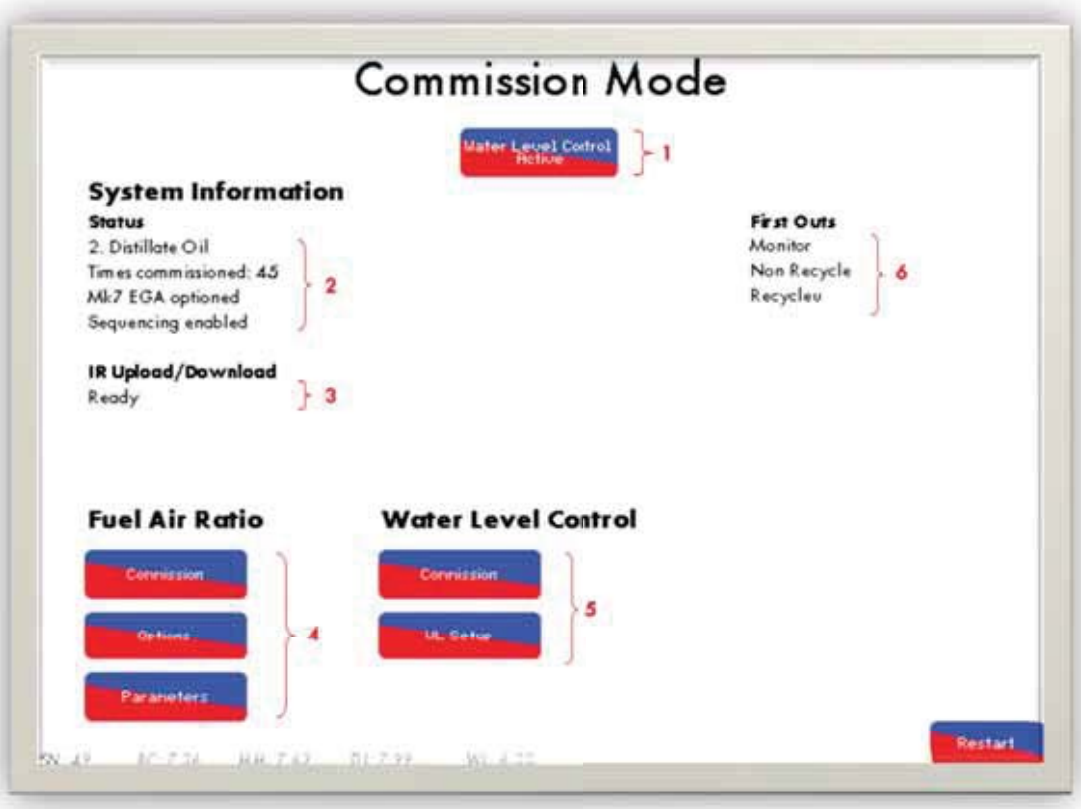

Figure 2.17.7.1 Commissioning mode screen

The commissioning mode screen is divided into the following sections;

1. The status display of the MM which has the following options; Water Level Control Active, Active without Water Level and Disabled.

2. The System Information provides the status of the MM with the number of fuels available and the number of times the MM has been commissioned.

3. The status of the Infra Red Upload / download.

4. The Fuel Air Ratio provides the option to commission the boiler as well as changing the options and parameters to the specification of the boiler plant.

5. Water Level Controls provides the option to commission the water level control as well as changing the Water Level (WL) setup to the specification of the boiler plant.

6. First Out Annunciation labels which can be changed by the user via the Infra Red Upload / Download programme.

2.17.7.2 Operating Mode – Mk6 Mode

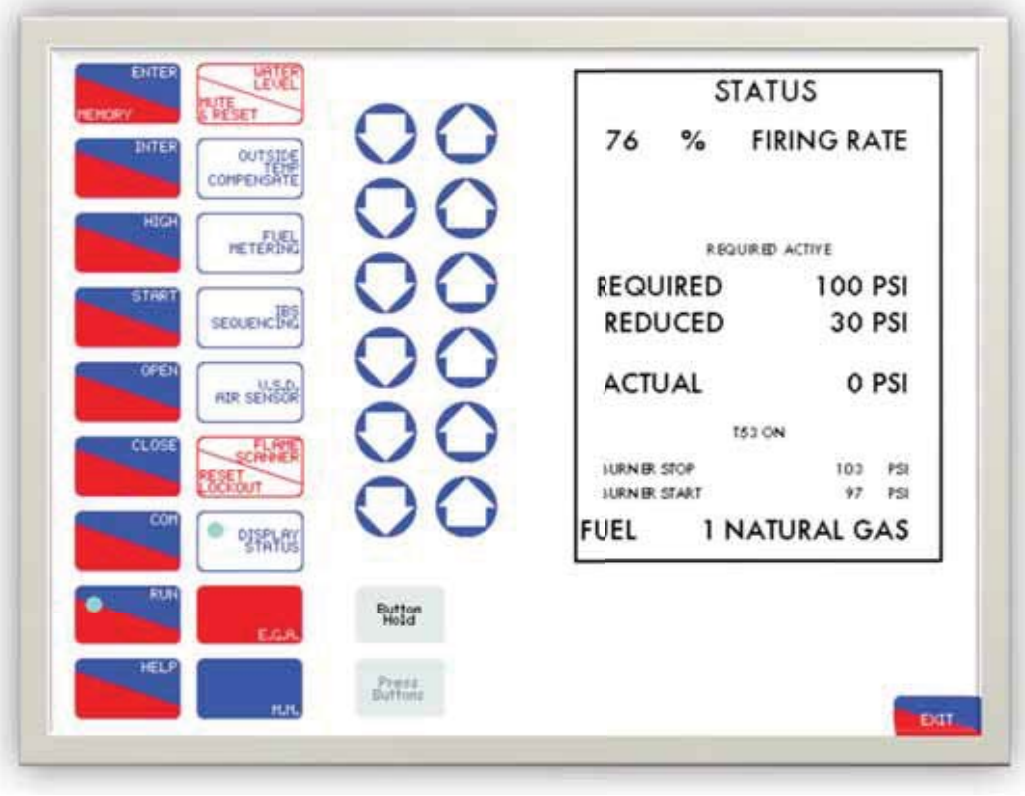

Figure 2.17.7.2 Mk6 Operating Mode Home Screen

The Mk6 mode emulates the user experience of the Mk6 units (the mode of operation is selectable on the system configuration screen and allows seamless transition between Mk6 and Mk7 modes of operation. You can only change between the Mk6 and Mk7 modes of operation once commissioning has been completed.). Whilst in this mode, all features and screens are the same as those on standard Mk6 units. Due to the nature of resistive touch-screen technology, two buttons cannot be physically pressed simultaneously on-screen. This feature is implemented through the use of "Button Hold" facility.

Button Hold - Button Hold: This button toggles multiple button press on/off.

Press Buttons - Press Buttons: This button is used to press currently selected buttons.

Button Hold instructions:

1. Press Button Hold button. The on-screen LED will appear confirming that the button is active.
2. Select the buttons you wish to press simultaneously. A square box will surround the currently selected buttons (e.g.)
3. Press the Press Buttons button to press the selected simultaneously.

Note: These two additional buttons have been added to the Mk6 screen to facilitate the process of accessing the options and parameters menu. These buttons are only available when the MM is in commissioning mode.

2.17.7.3 Operating Mode – Mk7 Mode

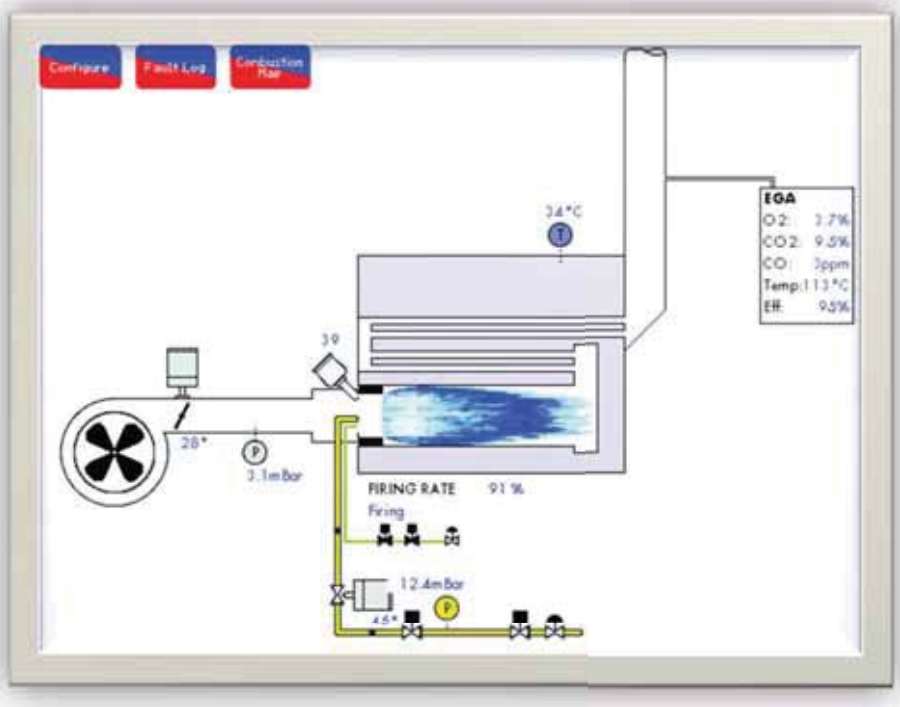

Figure 2.17.7.3 Mk7 Home Screen

Selecting Mk7 mode by pressing on the System Configuration screen will show the above screen. This screen is termed "Home Screen" and displays the current boiler room setup. It provides operating information about each component of the boiler in real time. Pressing on a component (selectable components highlighted above) will display further information about it.

Note: - For flame graphics to appear correctly fuel flow metering data must be entered, Section 2.17.7.20

- All commissioning procedures are carried out in Mk6 mode. The MM will automatically switch to this mode when appropriate.

2.17.7.4 Home Screen Buttons

The Homes Screen comprises of various buttons that can be selected to navigate through the various screens of the Mk7 unit. The buttons that appear on screen depend upon the boiler room configuration.

Button	Button Name	Notes
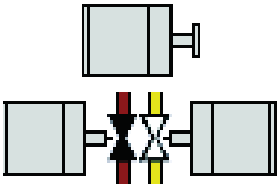	Servo Motor Button	Action: This button will open the MM Servo Channels screen(Section 2.17.7.17). This button is animated to display real time information corresponding to the servo movement. This button may appear in several places.
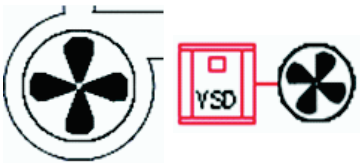	VSD Button	Action: This button will open the MM Servo Channels Screen (Section 2.17.7.17). The fan will rotate when the fan motor/ VSD is active
	Flame Safeguard Button	Action: This button will display the flame safeguard screen (Section 2.17.7.18). The number of counts will be displayed above this button if a UV/IR sensor is used. If a flame switch is used, the current state of the flame (on/off) is displayed.
	Flame Safeguard Button	Action: This button will display the flame safeguard screen (Section 2.17.7.18). It will animate during the burner's sequence showing when valves are open or closed.
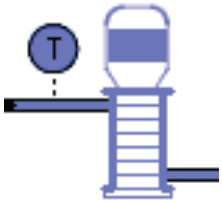	Water Level Button	Action: This button will display the water level screen (Section 2.17.7.18). The Temperature icon will display the current water inlet temperature in real time. (This button will only appear if a water level board is connected & configured).
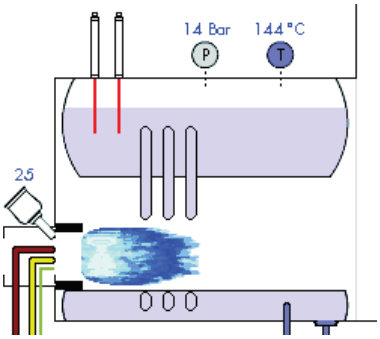	Boiler Status Button	Action: Pressing this button will display the status screen (Section 2.17.7.15). The exact display of this button will vary greatly to match the current boiler room setup (eg: existence of feedwater management, current fuel being used, boiler type, etc.) The flame colour will correspond to the current fuel being used. (blue for gas and orange for oil). The flame length will correspond to the current firing rate. Fuel flow metering must be completed for this function to be accurately displayed (Section 2.17.7.20).
Button	**Button Name**	**Notes**

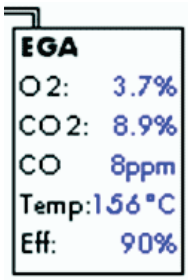

E.G.A. Button

Action: This button will open the EGA Screen (Section 2.17.7.23).

It will display in real time, the values of O2, CO2, CO, exhaust gas temperature and current combustion efficiency. (This button will only appear if an EGA has been optioned).

I.B.S. Button

Action: This button will open the IBS Screen (Section 2.17.7.19).

This button will display in real time the ID number of the current boiler and the current IBS status. (This button only appears if IBS is optioned).

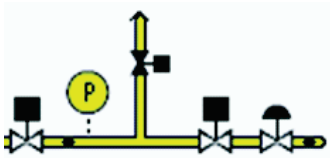

Fuel Pressure Sensor History Button

Action: This button will open the VPS Screen (Section 2.17.7.22).

This button will animate to show each stage of the VPS sequence in real time. This button is available in 2 and 3 valve configurations (Option 130).

Outside Temperature Compensation Button

Action: This Button will open the OTC Screen (Section 2.17.7.27).

This button will actively display the current outside temperature.(This button will only display if a OTC sensor is optioned).

Note: Not to be confused with water temperature sensors which are displayed in blue.

2.17.7.5 Home Screen Components

Servo

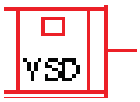

Variable Speed Drive

Gas Pipe (No Flow)

Gas Pipe (Gas Flowing)

Oil Pipe (No Flow)

Oil Pipe (Oil Flowing)

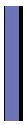
Water Pipe (No Flow)

Water Pipe (Water Flowing)

Feed Water Valve

Flue Gas Recirculation Valve

Damper

Piping (Gas is currently flowing)

Gas Valve (Solenoid Closed)

Gas Valve (Solenoid Open)

Fuel Valve (Closed)

Fuel Valve (Open)

Regulator

Flame Detector

Temperature Sensor (Water)

Temperature Sensor (Outside)

Pressure Sensor (Air/Steam)

Pressure Sensor (Fuel)

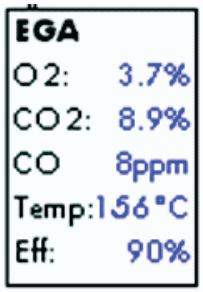

Emissions Gas Analyzer information

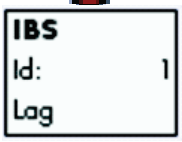

Intelligent Boiler Sequencing Information

Fan

Water Level

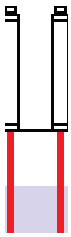
Water Level Probes

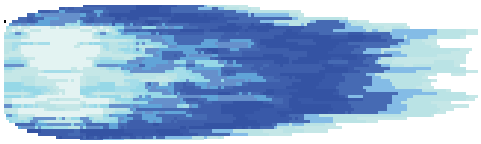

Gas Flame

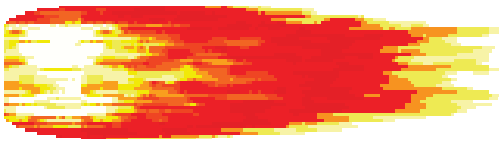

Oil Flame

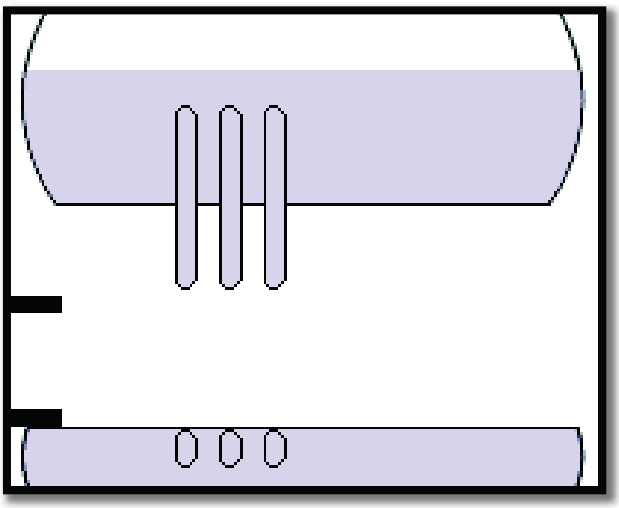

Watertube Boiler

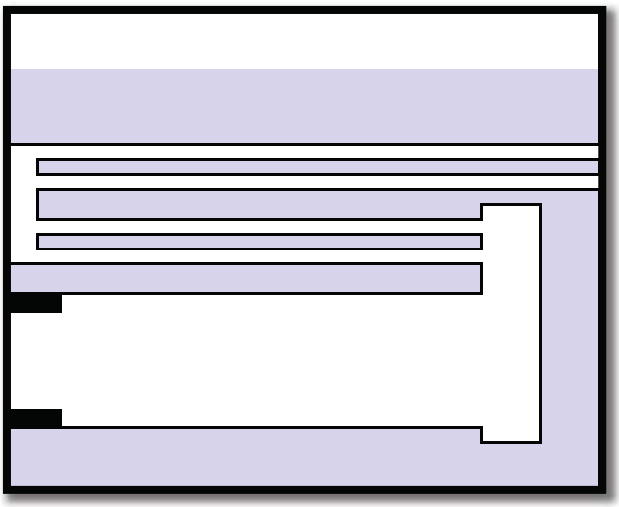

Fire Tube Boiler

2.17.7.6 System Configuration

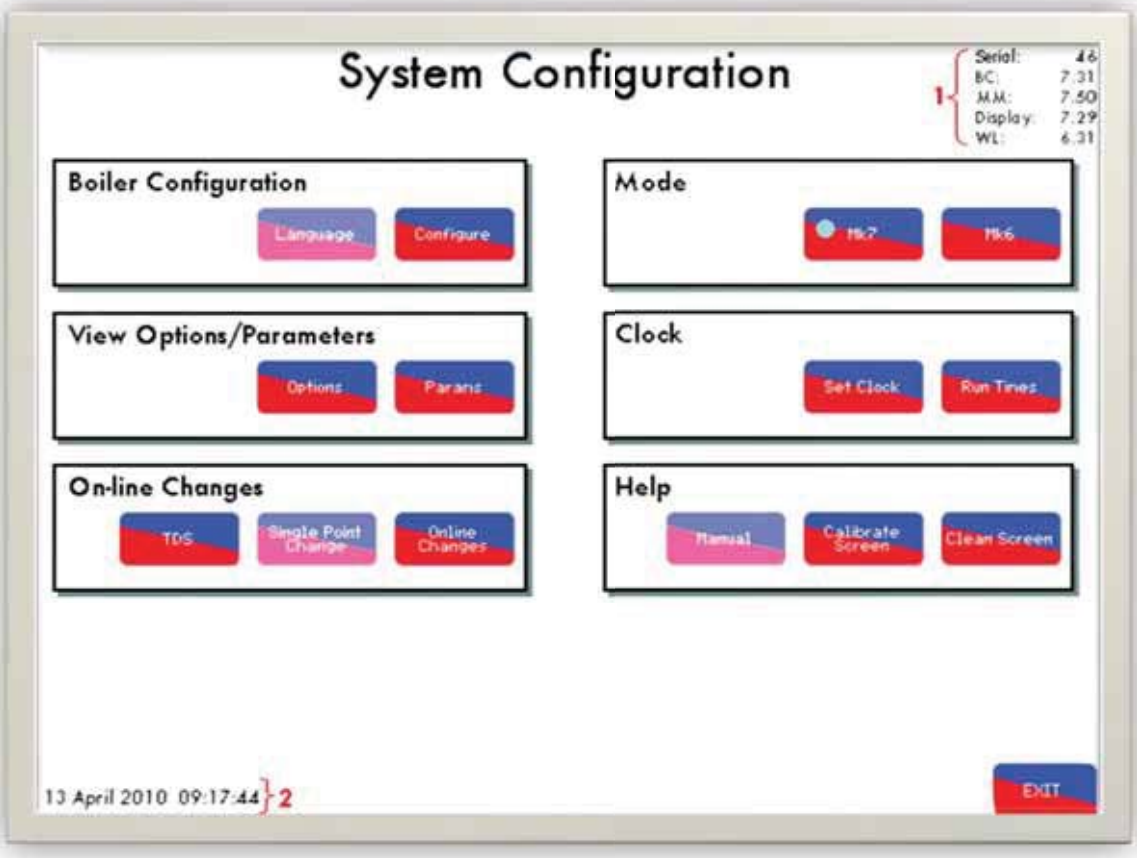

Figure 2.17.7.6 Main System Configuration Screen

This is the main configuration screen of the Mk7. The system configuration screen is divided into the following sections;

1. The Serial Number of the unit and software versions currently in use (BC, MM and DI).
2. The current date and time.

Boiler Configuration – Here you can enter the Language Select Screen or the Boiler Room Configuration Screen.

Mode – Here you can select the Operational Mode: Mk6 or Mk7. The current mode selected is marked by a blue LED.

View Options/Parameters – Here you can view all 150 Options and Parameters as well as the current values for each of them. No password is needed to view this information as their setting cannot be changed via this screen.

Clock – Here you can set the current date and time (Set Clock) and programme the Run Times.

On-Line Changes – Here you can enter Single Point Change (Section 2.17.7.11) and do online changes for Options and Parameters 1 – 109.

Help – Here you can read the manual on the Mk7, calibrate the screen and disable the screen for cleaning.

2.17.7.7 Language Selection

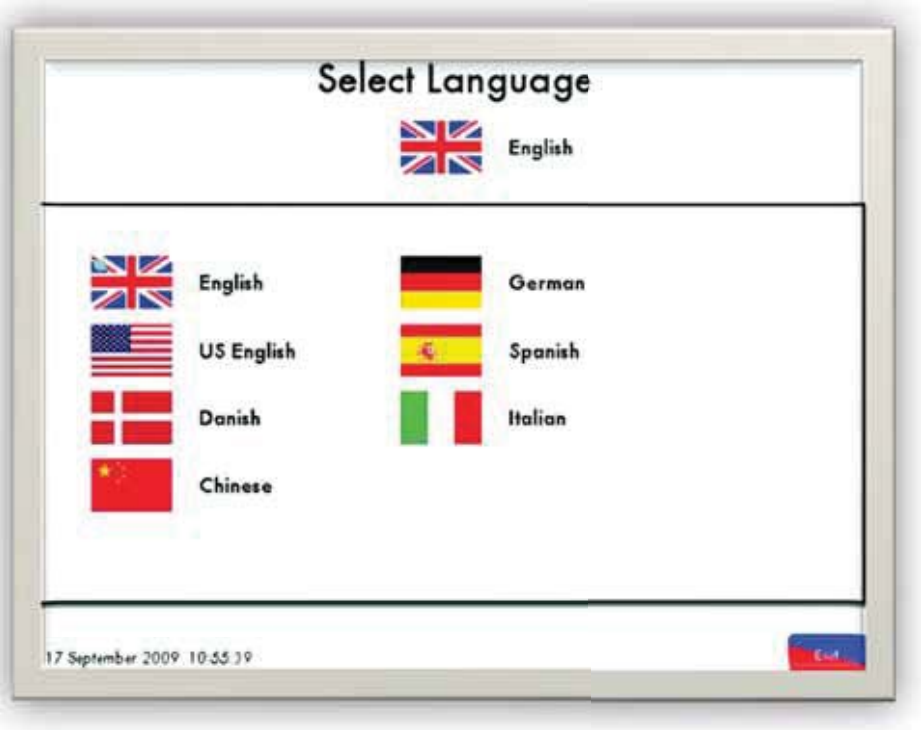

Figure 2.17.7.7 Language Selection Screen

The language screen allows for selection of on-screen language. This language will be applied throughout the Mk7 screens.

The Mk7 can accommodate any language. If you are interested in translating the on-screen text to a language that does not appear on this menu, please contact Autoflame technical support directly on sales@autoflame.com.

2.17.7.8 Boiler Configuration

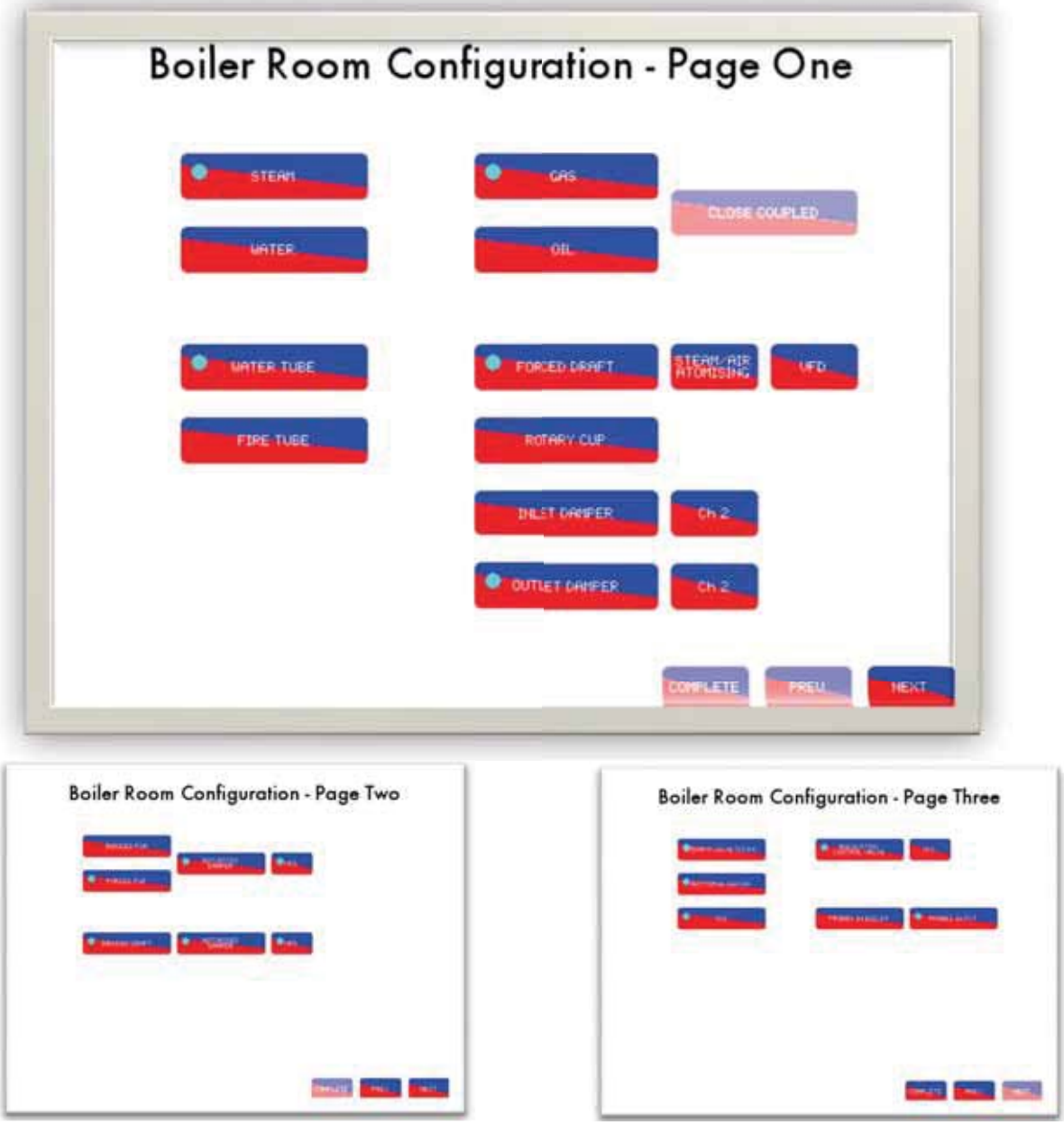

Figure 2.17.7.8Boiler Room Configuration Screens

The Boiler Room Configuration Screens allow you to define the exact configuration of your boiler. The settings optioned on this screen will appear on the Home Screen once they have been entered.

PREV and NEXT - Navigational buttons are used to move through the various screens.

- Currently selected options are denoted by this blue LED.

COMPLETE - When Boiler Room Configuration is complete, navigate to page 3 and press this button to accept current configuration.

Note: Page 3 options only become available when the Water Level Board is selected as Active during commissioning and "steam" boiler is selected on Page 1.

2.17.7.9 Viewing Options and Parameters

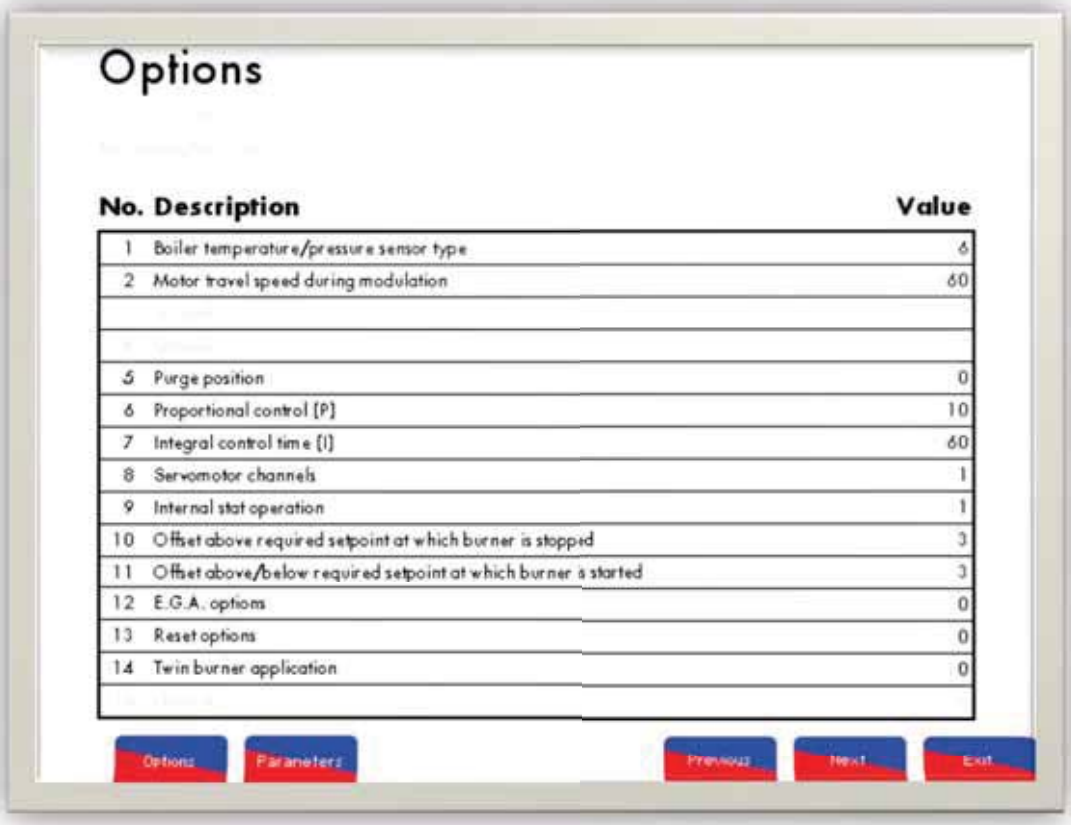

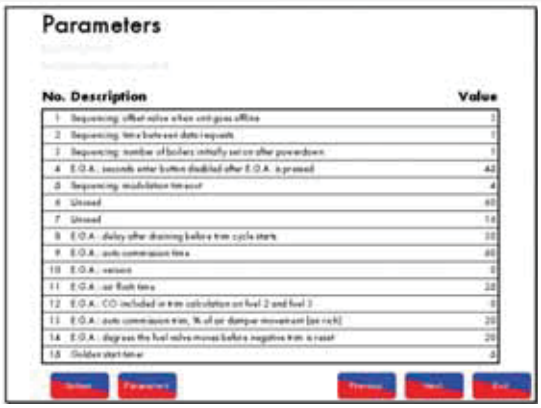

Figure 2.17.7.9 Option and Parameter Viewing Screens

These screens allow you to view all 150 options and parameters while the burner is firing. The options cannot be modified from these screens. In order to change options 1 – 109, refer to the online changes part of this manual (Section 2.17.7.10). To change options 110 - 150, the unit must be in commissioning mode.

Whilst viewing, the currently selected value for each option is listed on the right most side of said option. All options/parameters are selectable and pressing on an option will display further information.

2.17.7.10 Online Changes

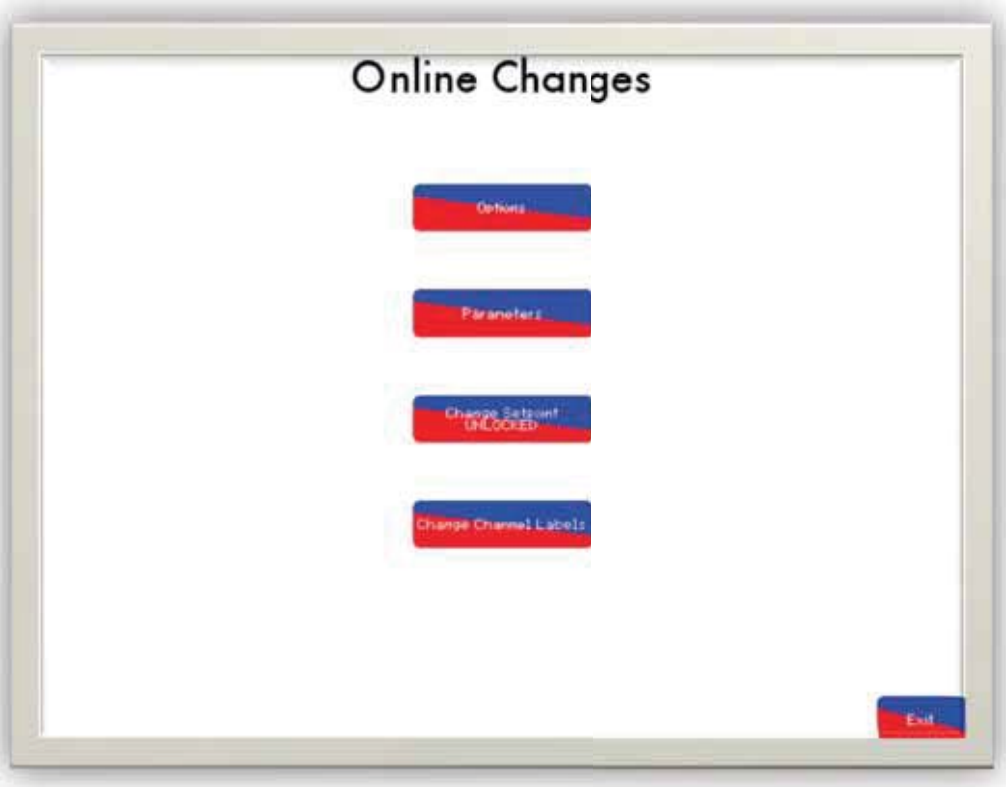

Figure 2.17.7.10.i Online Changes Screen

From the screen shown in 2.17.7.10.i it is possible to do the following:

1. Enter into either the Options or Parameters screens to change options and parameters online (See Below).
2. Lock the setpoint or unlock the setpoint by pressing the "Change Setpoint" button. Locking the setpoint will mean that you will not be able to change the setpoint on the Boiler Status Screen (Section 2.17.7.15).
3. Change the Channel labels by pressing the "Change Channel Labels" button. When in this screen press the channel label you wish to change and a keypad will appear with a list of options that the channel label can be changed to. Enter the number of the option you wish the channel label to be changed to and press the

button. One satisfied press the

button to store the channel labels and exit.

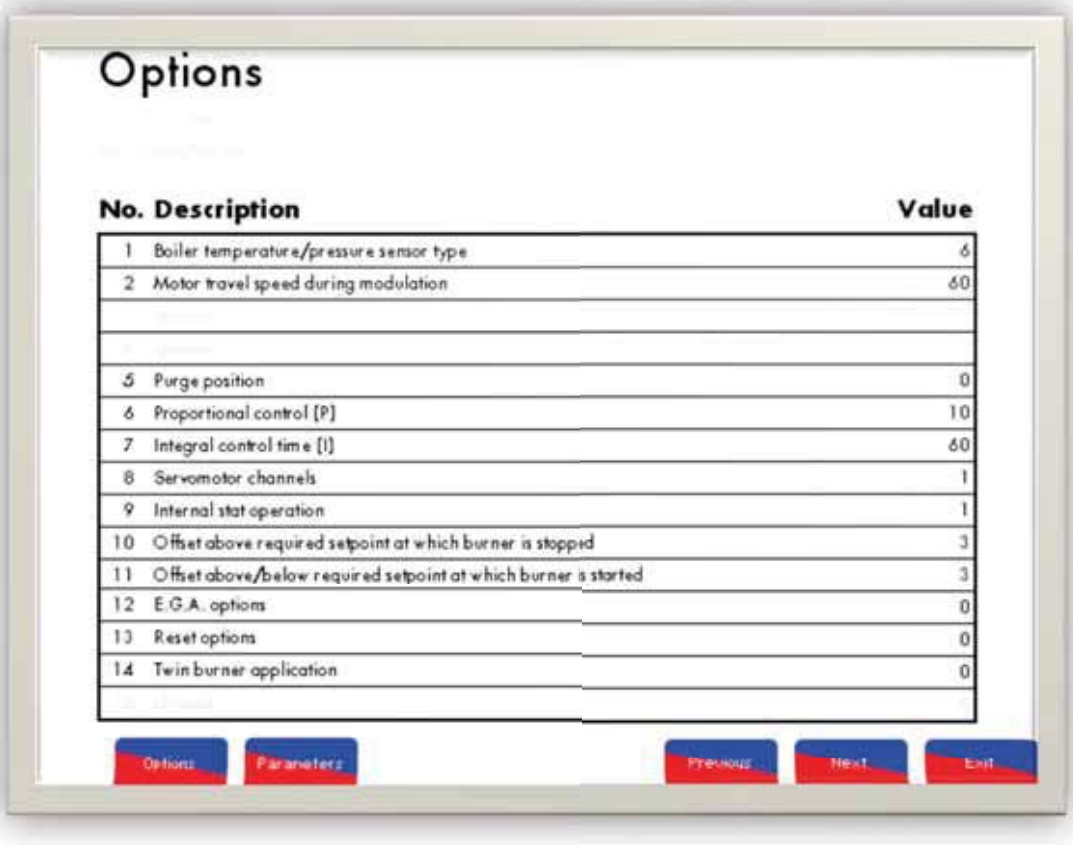

Options

No.	Description	Value
1	Boiler temperature/pressure sensor type	6
2	Motor travel speed during modulation	60
5	Purge position	0
6	Proportional control (P)	10
7	Integral control time (I)	60
8	Servomotor channels	1
9	Internal stat operation	1
10	Offset above required setpoint at which burner is stopped	3
11	Offset above/below required setpoint at which burner is started	3
12	E.G.A. options	0
13	Reset options	0
14	Twin burner application	0

Options Parameters Previous Next Exit

Figure 2.17.7.10.ii Online Changes Options Screen

You can change the Options and Parameters online by doing the following:

1. Press the "Options" or "Parameters" button and enter the online changes password in the keypad and press Continue button.
2. Select the option you wish to change by pressing on the text. The screen for the selected option will appear. If the option or parameter requires a value within a range use the buttons to select the value required. If the option or parameter requires a value from a given set then select the value by pressing the on the text itself.
3. Navigate through the various screens using the Prev and Next buttons or press Enter to return to the Figure 2.17.7.10.ii screen.
4. Once the desired options/parameters have been set altered press the EXIT button to save the changes and exit the online changes.

2.17.7.11 Single Point Change

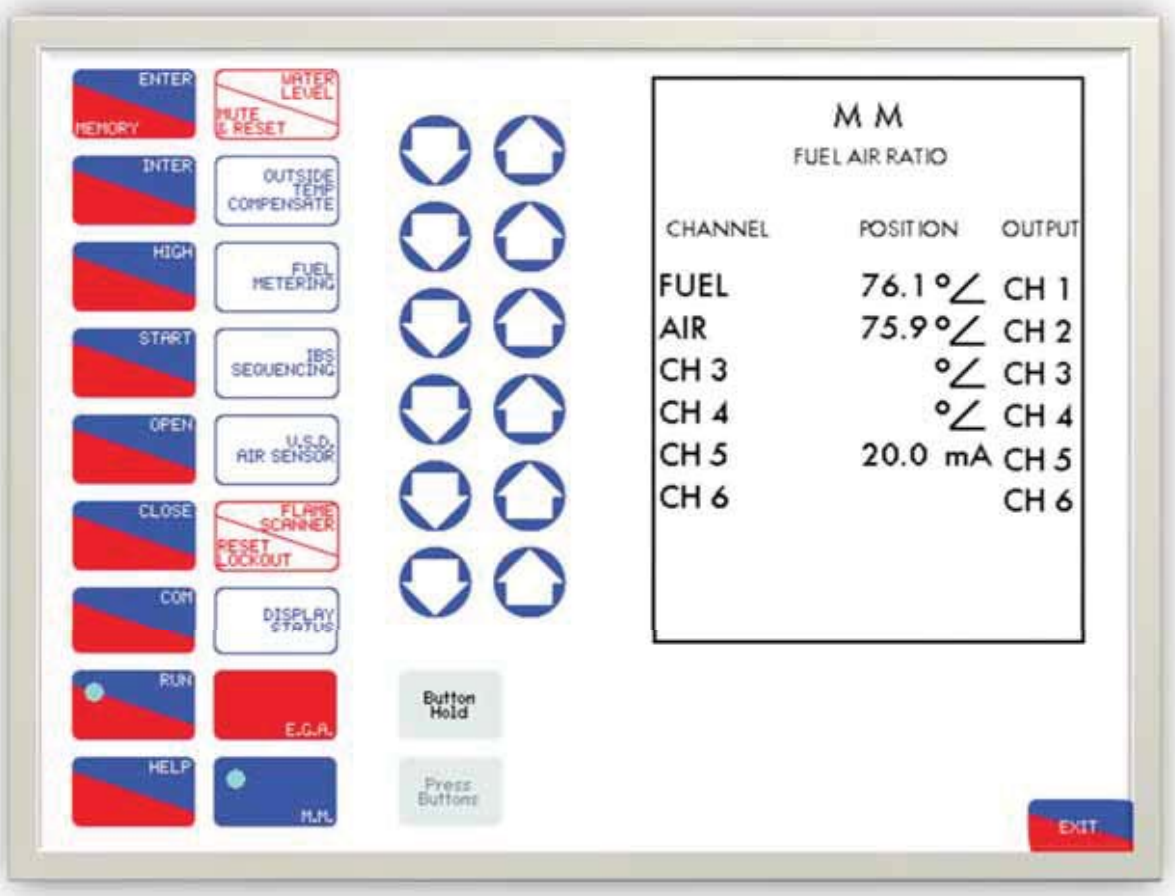

Figure 2.17.7.11 Single Point Change Commissioning Screen

Single Point Change is only available while the burner is firing. At all other times, the Single Point Change button is disabled.

Commissioning of the fuel curve (as with all forms of commissioning) is done via the Mk6 mode. To this end, the MM will switch to the Mk6 commissioning screen automatically until Single Point Change has been completed.

In order to successfully carry out Single Point Change, follow these instructions:

1. Press Single Point Change button in the System Configuration Screen.
2. Enter the password using the number pad and press Continue, the MM will now switch to Mk6 mode.
3. Both ENTER MEMORY and RUN will begin to flash. If you do not wish to proceed with single point change, press RUN followed by EXIT. To begin Single Point Change, select the point to be changed using CH1 buttons and press ENTER MEMORY to begin modifying the point.
4. At this point all Channels (CH1 – 6) can be modified using the appropriate buttons. The displayed positions are the current positions of the servos.

5. Once the current point has been modified to match requirements, press ENTER MEMORY to store the new commissioning data. If an E.G.A. is optioned, press E.G.A. and a timer (with the value of Parameter 4) will appear and begin to count down. During this time, the ENTER MEMORY button is disabled. If the emissions are satisfactory, press ENTER MEMORY to perform AUTOTRIM, (Given that option 12 is set for AUTOTRIM). Upon completion of AUTOTRIM, the commissioning data will be stored.
6. Use CH1 to select the next point to be changed, followed by ENTER MEMORY to edit that point.
7. Repeat steps 4-6 for each commissioned point to be changed.
8. One satisfied, press RUN followed by ENTER MEMORY to resume normal operation.

2.17.7.12 Setting the Time

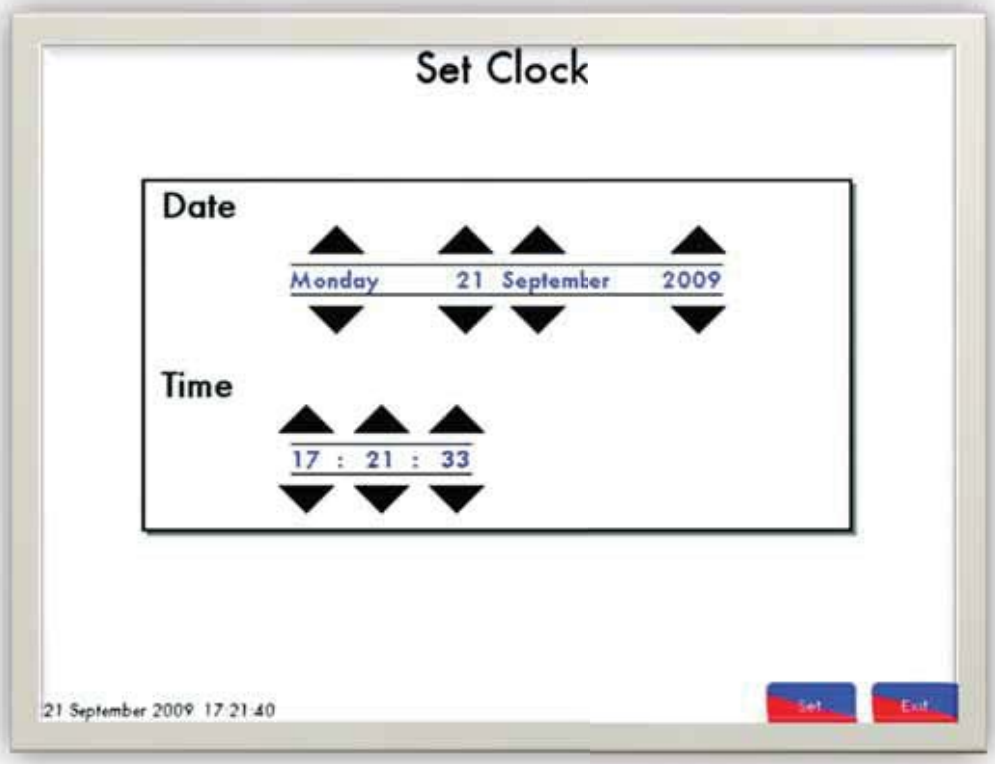

Figure 2.17.7.12 Set Clock Screen

The set clock screen is used to set the time used for all functions within the Mk7. It is particularly important for logging functions such as Lockout and Water Level Alarms.

1. Press the Set Clock button to access the Set Clock screen.
2. Enter the Set Clock password (10 10) using the keypad and press Continue.
3. Use the ▲▼ buttons to change the date and time.
4. Once complete press the Set button to save any changes or the EXIT button to leave the Set Clock screen without making any changes.

2.17.7.13 Setting Run Times

Figure 2.17.7.13.i Run Times Screen

The Run Times screen allows the user to set the times at which the boiler will initiate, be off, on or at a reduced setpoint. The reduced setpoint is set on the status screen (Section 2.17.7.15).

1. Press the

button to access the Run Times screen.
2. Using the keypad enter the Run Times password (11 11) and press

.
3. Directly beneath the Run Times heading is the current boiler status and if Run Times is enabled or disabled. By default this facility is disabled. To enable/disable press on the text to change.
4. If the Run Times facility is enabled, editing of the Run Times is also enabled. In order to change the Run Times for each day press on the text of the day that needs editing. This will give you the screen in Figure 2.17.7.13.ii (next page).

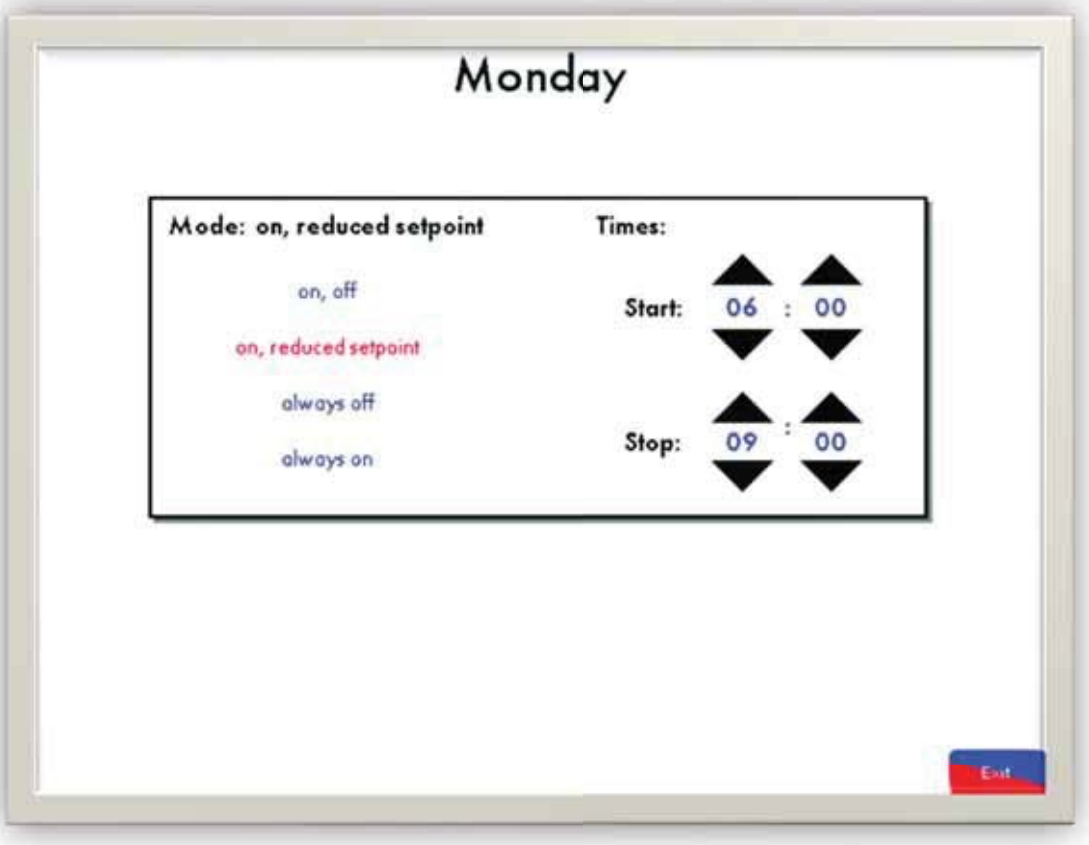

Figure 2.17.7.13.ii Run Times Editing Screen

5. Using the ▲▼ buttons, select the time at which the burner starts (Start:) and the time the burner stops (Stop:). The mode of operation can also be selected by pressing the text applicable. Once the desired settings have been for the current day have been setup press the EXIT button to return to the main Run Times screen.
   Note: The time range between the start and stop time refers to the ON times. All times outside of this range will be either off or in a reduced setpoint, depending upon which option is selected. For modes "always off" and "always on" the times section is disabled as this is no longer applicable.
6. Repeat steps 4 and 5 until each day has been set up as desired. Once complete, press the Enter button to record the changes or the EXIT button to discard any changes made.

2.17.7.14 Changing Channel Labels

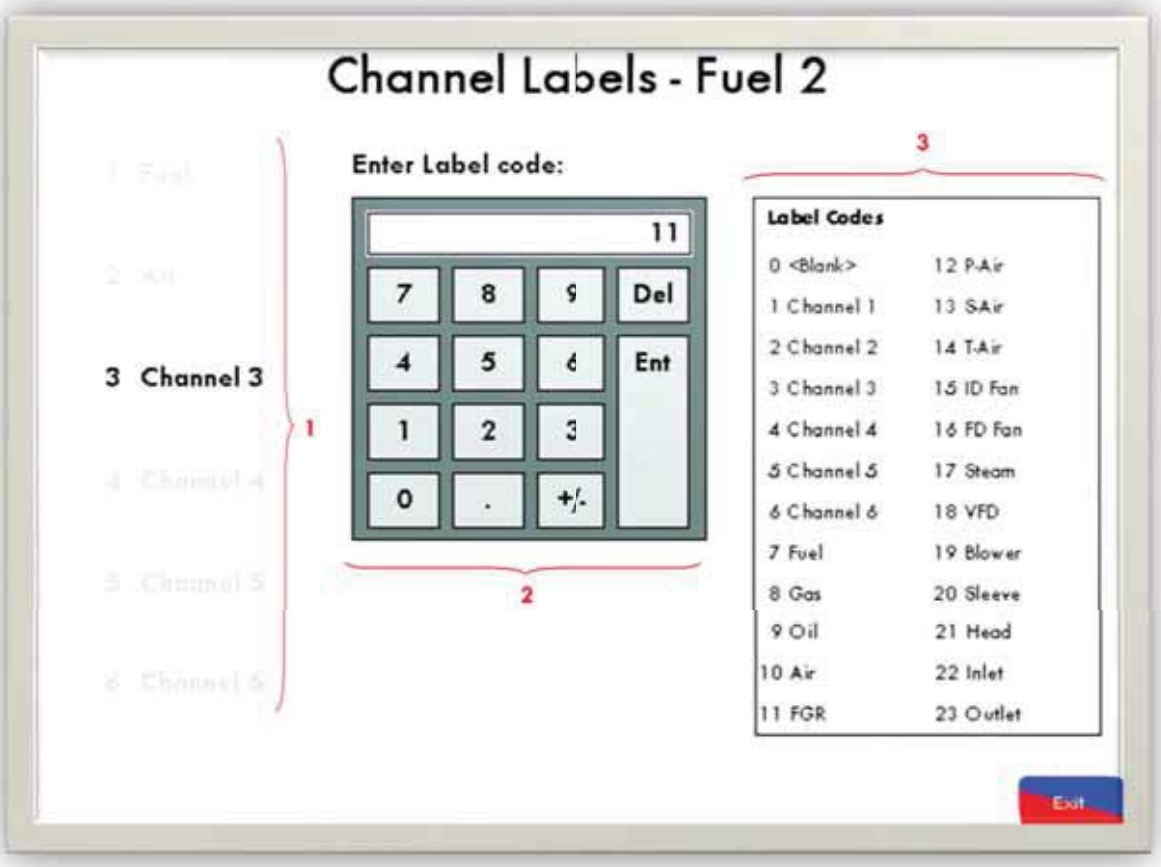

Figure 2.17.7.14 Changing Channel Labels Screen

The changing channel labels screen allows the user to label each servomotor and VSD channel to match the set-up being used.

1. Displays

2.17.7.15 Status Screen

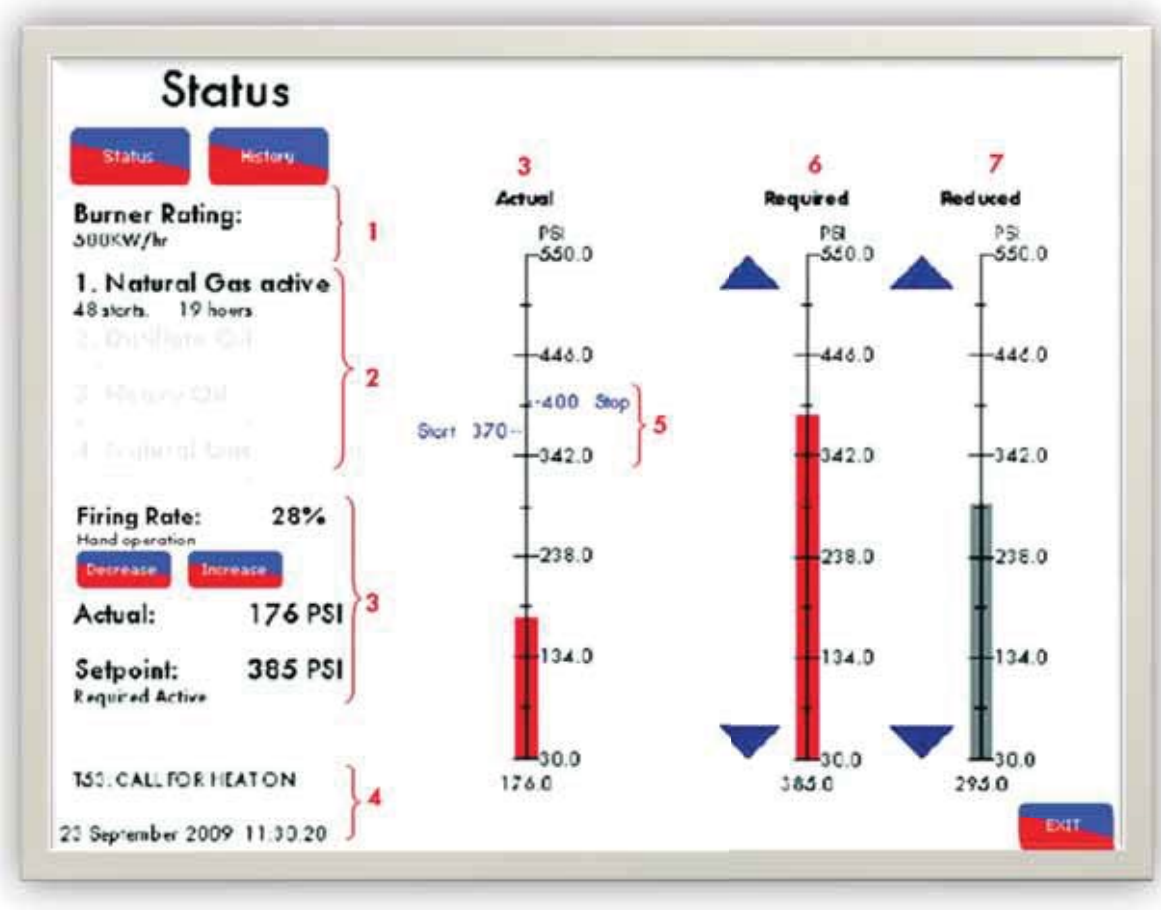

Figure 2.17.7.15 Boiler Status Screen

The status screen allows the adjustment of the required and reduced setpoints using the arrows. It also displays the following information:

1. The Burner Rating
2. The current fuel being fired (highlighted) and the other available fuels along with how many times each fuel has been started and has run.
3. The current Firing Rate along with the actual pressure/temperature and the setpoint pressure/temperature.
4. The current T53 status (call for heat ON/OFF) and the current date and time.
5. Burner start (Option 11) and burner stop (Option 10) pressure/temperature.
6. Required setpoint. Note: If the required value has been locked the arrows shown in Figure 2.17.7.15.i will not appear.
7. Reduced setpoint (Relates to Run Times Section 2.17.7.13)

Note: The colour of the bars 6 and 7 indicates which is active/inactive. Red = active, Grey = inactive.

2.17.7.16 Setpoint History Screen

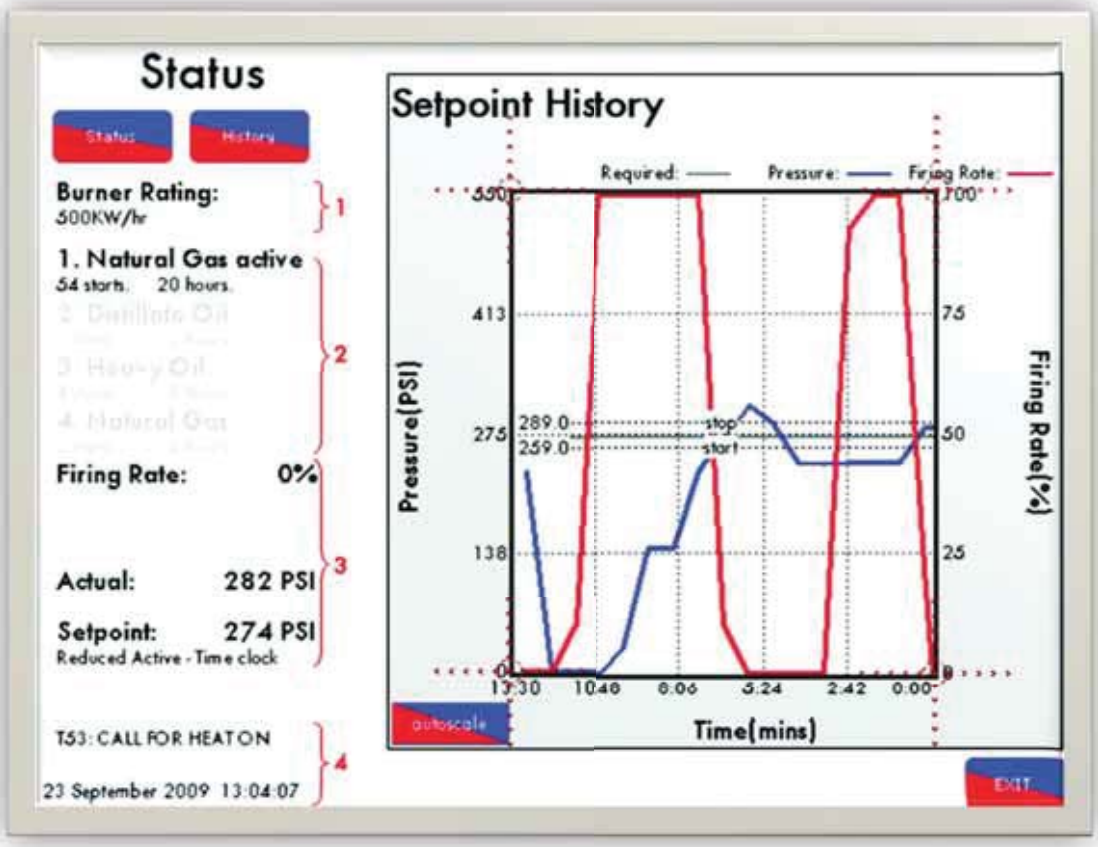

Figure 2.17.7.16 Setpoint History Screen

Pressing the button shows the setpoint history graph where values for required setpoint, actual pressure/temperature and firing rate for the past 24 hours are displayed. **Note:** the drag buttons for scaling shown in Figure 2.17.7.16 cannot be used if is enabled.

Some important information from the previous screen still remains:

1. The Burner Rating
2. The current fuel being fired (highlighted) and the other available fuels along with how many times each fuel has been started and has run.
3. The current Firing Rate along with the actual pressure/temperature and the setpoint pressure/temperature.
4. The current T53 status (call for heat ON/OFF) and the current date and time.

2.17.7.17 MM Servo Channels

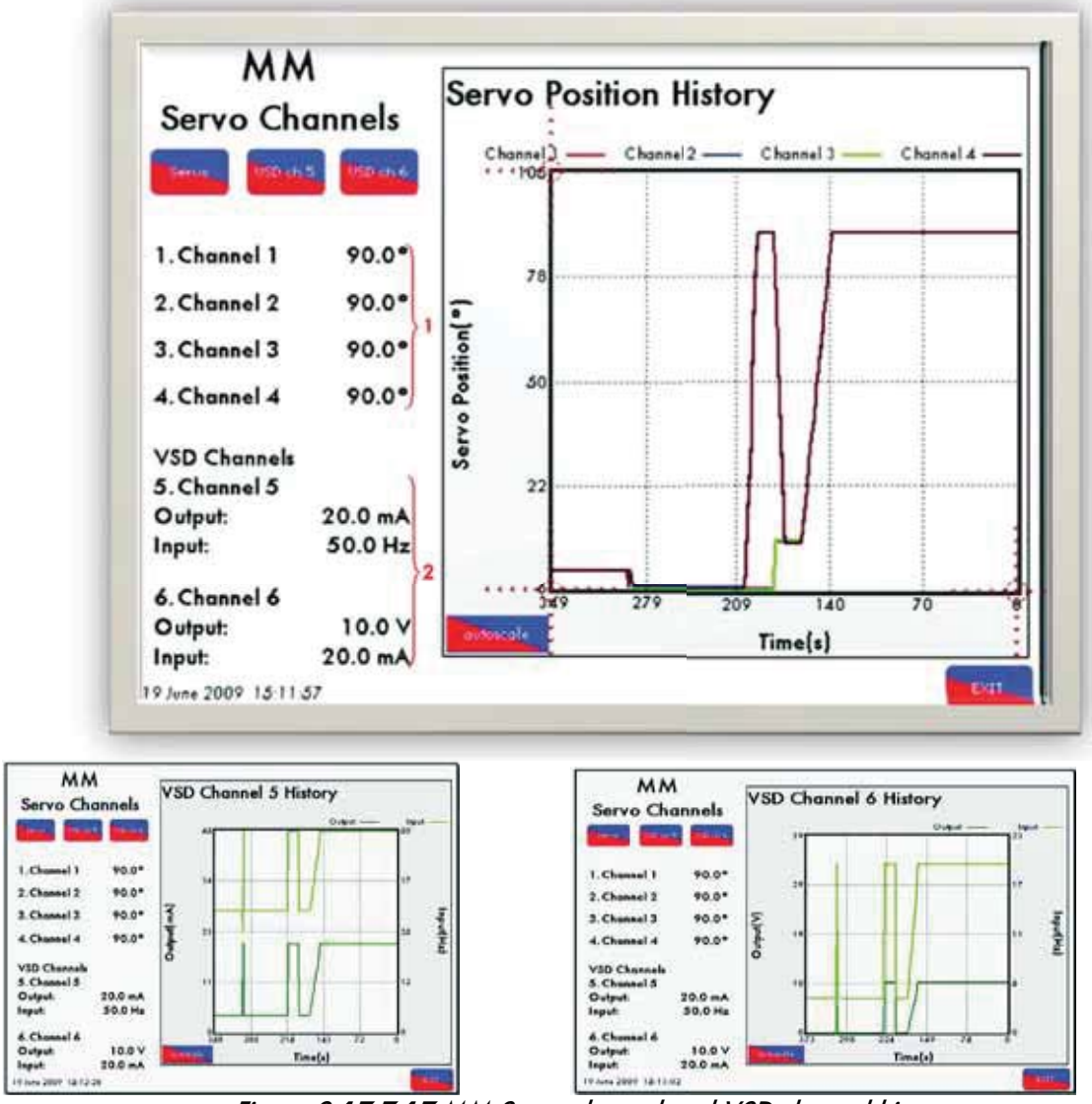

Figure 2.17.7.17 MM Servo channel and VSD channel history

The MM servo channel screen displays current and historical servo positioning information as well as VSD information.

1. Current servo motor position
2. Current input and output values for the two VSD channels

Displays VSD Channel 5 History.

Displays VSD Channel 6 History.

2.17.7.18 Flame Safeguard

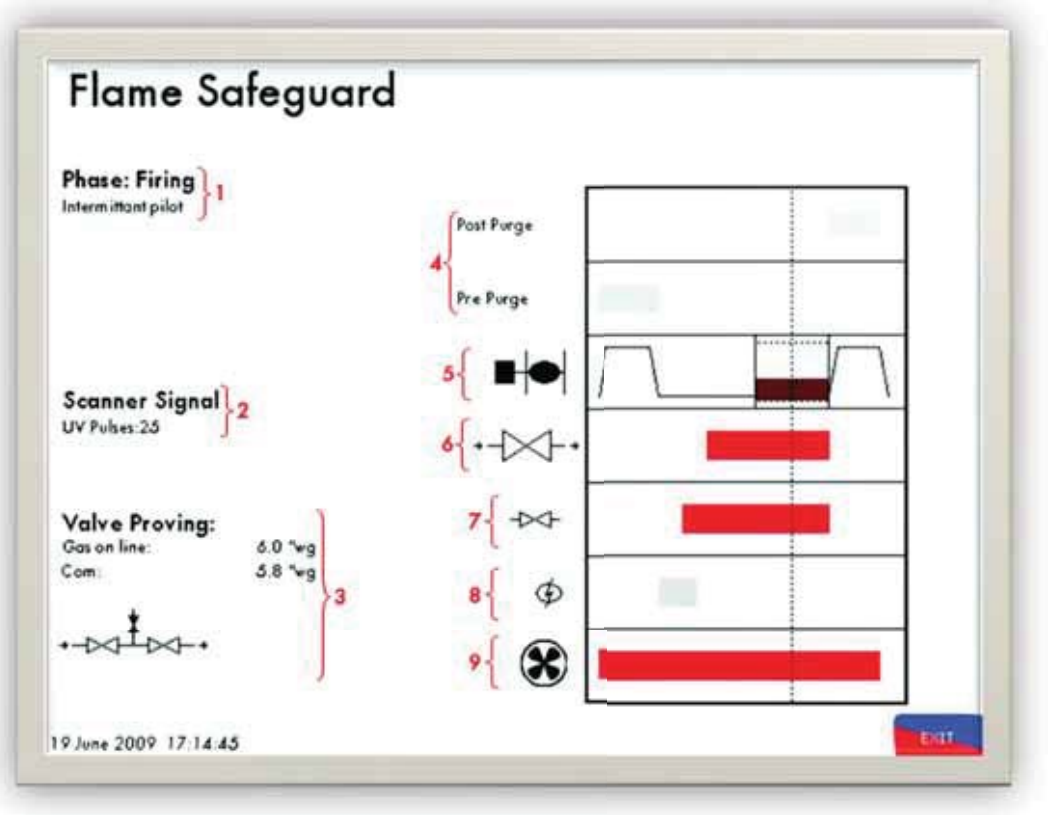

Figure 2.17.7.18 Flame Safeguard Screen

The Flame Safeguard screen displays the current status of the system and associated valves.

1. This shows the current phase of the MM. It will update to display the current checks in real time.
2. If a flame scanner (not a switch) is optioned, the current signal strength will be shown here. This section only appears in the presence of a compatible scanner.
3. When VPS is optioned, this section displays the valve arrangement and the current status of each valve during the Valve Proving Sequence. If an Autoflame gas sensor is used for the proving, the current gas concentration will be displayed from startup to shut down.

Safeguard diagram:

Throughout the entire firing sequence, the vertical dotted line will move horizontally showing the currently active components. The inactive components are shown in grey and the active components in red.

4. The Pre and Post Purge times
5. Servomotor position
6. Main Gas Valve
7. Start Gas Valve
8. (Pre-) Ignition
9. Air motor/VSD

2.17.7.19 IBS

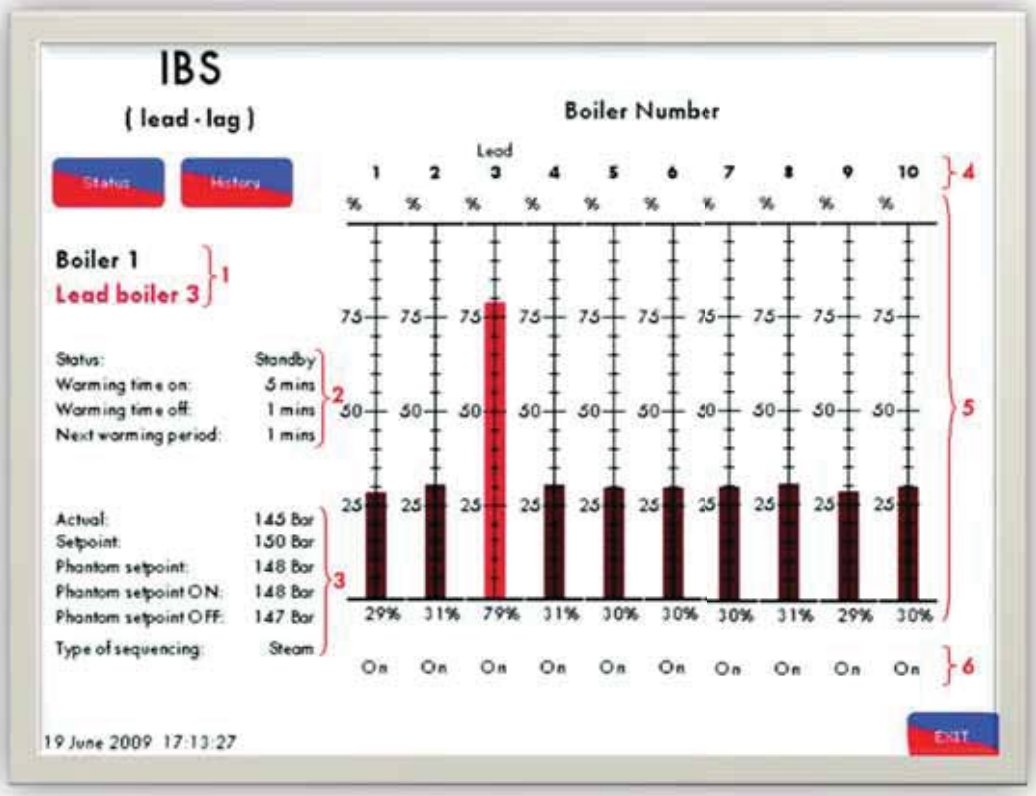

Figure 2.17.7.19i IBS Screen

The IBS screen shows the current status of all the boilers that are setup for IBS. It displays which boiler is the lead boiler (red) and current status of the boiler.

1. The current MM/Boiler ID (black) and the selected lead boiler (red)
2. IBS information for the current boiler
3. Required setpoint, actual pressure and phantom setpoint information. It also displays the type of sequencing for the current boiler.
4. Boiler Number
5. Firing Rate for each boiler
6. Current Burner status (On/Off/Standby)

Pressing this button will display the firing rate for each IBS boiler over the past 24 hours (Figure 2.17.7.19.ii)

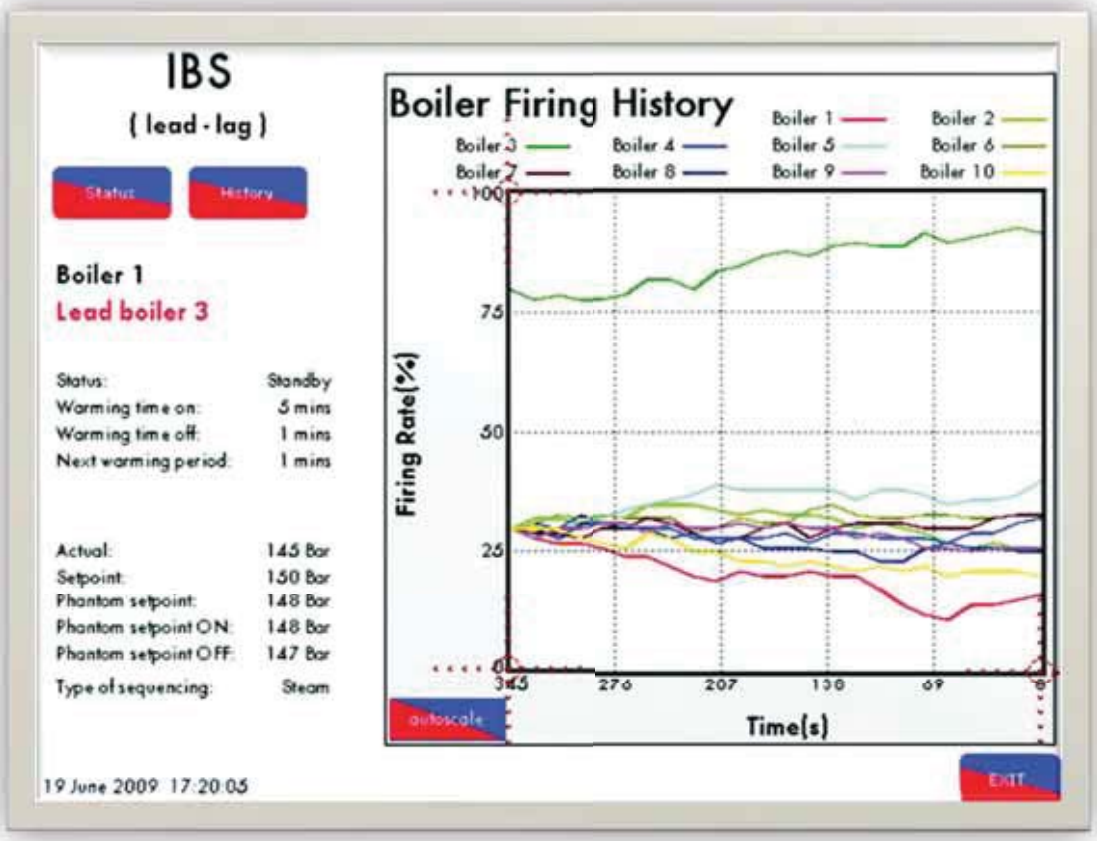

Figure 2.17.7.19.ii IBS History Screen

Pressing the boiler number will select/deselect that boilers history from the graph. The graph can also be scaled by dragging where indicated in Figure2.17.7.19.ii or by pressing the

button.

2.17.7.20 Fuel Flow Screen

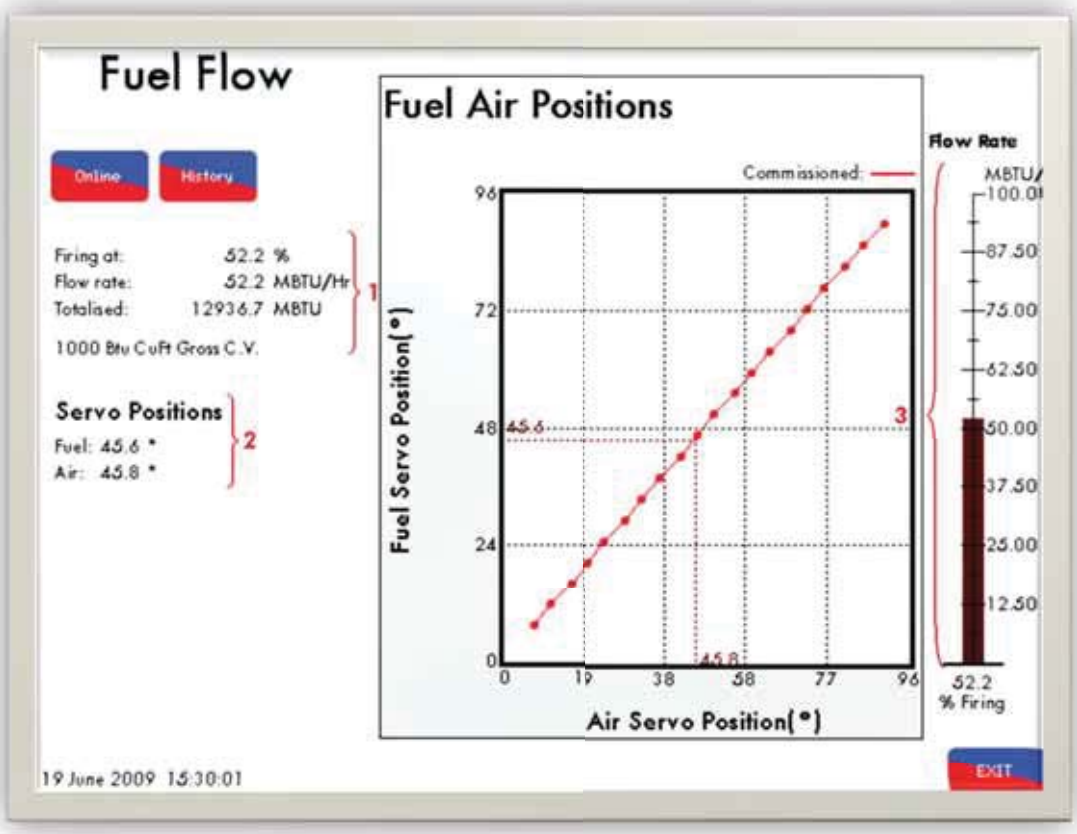

Figure 2.17.7.20.i Fuel Flow Screen

If the fuel flow button on the Home Screen is pressed the above Screen is displayed. This screen shows the commissioned fuel curve for both fuel and air servo positions. It also displays the current rate of fuel flow at the current positions. The information of the Fuel Flow screen (online), above is distributed as follows:

1. Firing rate, flow rate and totalised consumption of all fuels fired
2. Current positions of the fuel and air servos
3. Current flow rate at current servo positions

Note: Shown on the above screen are commissioned fuel-air values making up the Fuel Curve. Each red dot is Inter point on the combustion curve. Pressing on a point inside the commissioned line will display the corresponding fuel and air servo positions.

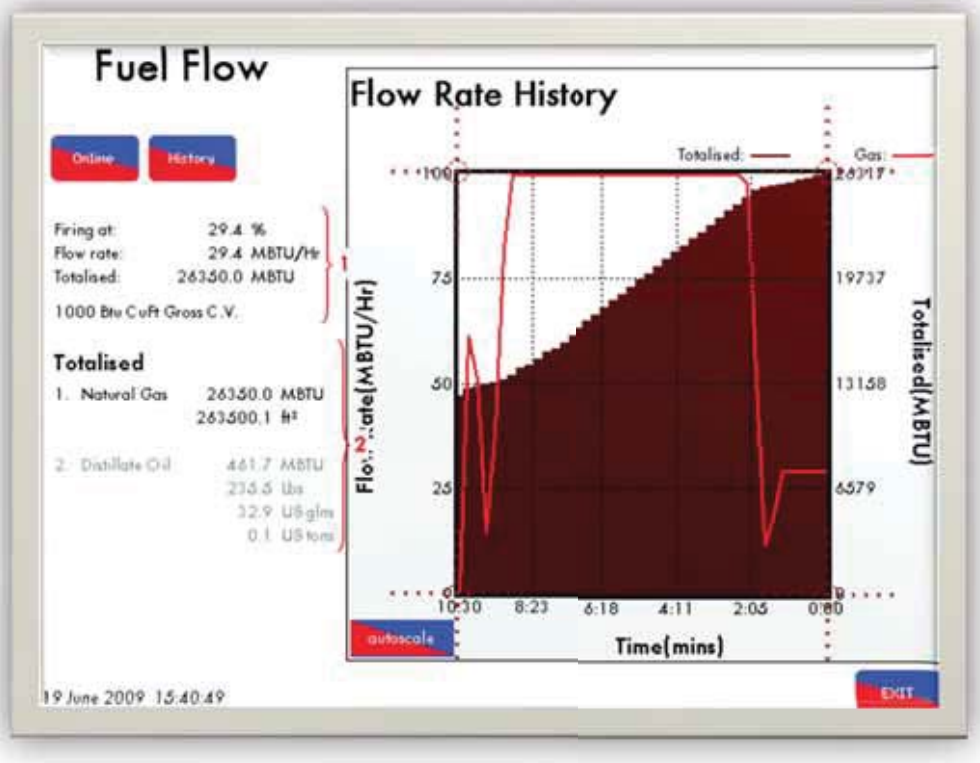

Figure 2.17.7.20.ii Fuel Flow Rate History Screen

Pressing this button displays the Fuel Flow Rate History graph. This graph displays current and totalized flow rate information. The graph can be scaled by dragging the points shown in Figure 2.17.7.20.ii or pressing the 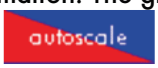

button.

1. Firing rate, flow rate and totalised consumption of all fuels fired
2. Totalised fuel consumption divided by fuel type.

2.17.7.21 Fuel Flow Commissioning

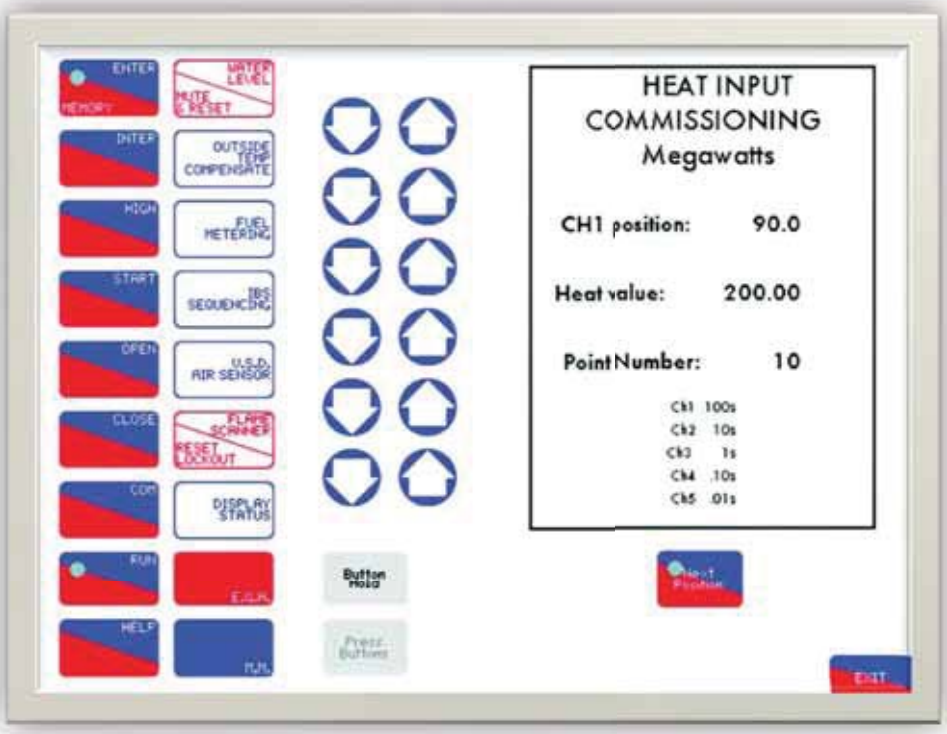

Figure 2.17.7.21 Fuel Flow Metering Commissioning Screen

Fuel Flow metering serves to:

- Totalise the amount of fuel used
- Calculate the firing rate and all functions that utilise firing rate information (e.g. flame graphics, IBS and steam flow metering).

Note: Fuel Flow metering information MUST be set in order to allow data download when using a DTI.

If Fuel Flow metering is being entered for the first time:

1. Set Option 57 to 1 in online changes or commissioning mode (If fuel flow metering is being reset then set Option 57 to 0 and back to 1).
2. Press the button to accept the change. If in commissioning mode the unit will restart and then start burner initiation procedures. If in online changes the unit will go back to the Home Screen. Once the burner is modulating the screen in Figure 2.17.7.21 will appear.
3. The display shows the fuel valve position in angular degrees and the flow units which are adjusted by using the CH1/CH2/CH3/CH4/CH5 buttons as specified at the bottom of the screen. The point number is the current point being changed.

Note: The minimum numerical value that can be entered is 0.01
The maximum numerical value that can be entered is 999.0

4. The values are entered in descending order i.e. point 10 is the high fire position and point 1 is the low fire position. The 10 points are located automatically by the MM.
5. Press the button to enter the position's Fuel Flow value.

6. Once the value is satisfactory press the

button to confirm the value.
7. Repeat steps 5 and 6 until Fuel Flow data has been entered for each value.
8. Upon entering the Fuel Flow data for the final point (point 1) the burner will continue to fire and begin modulating.
9. To reset the totalised values for each fuel use Parameter 64.

Note: If a fuel flow meter is not being used and only arbitrary values are being used then make sure a good range of values are being used (e.g. 100 to 10 rather than 1 to 0.1). Also make sure that when using arbitrary values make sure the 10 points are in equal places along the range (e.g. 100,90,80,...,10 not 100,95,80,...,10). Not doing this could lead to problems when using IBS and the flame graphic.

2.17.7.22 Valve proving System

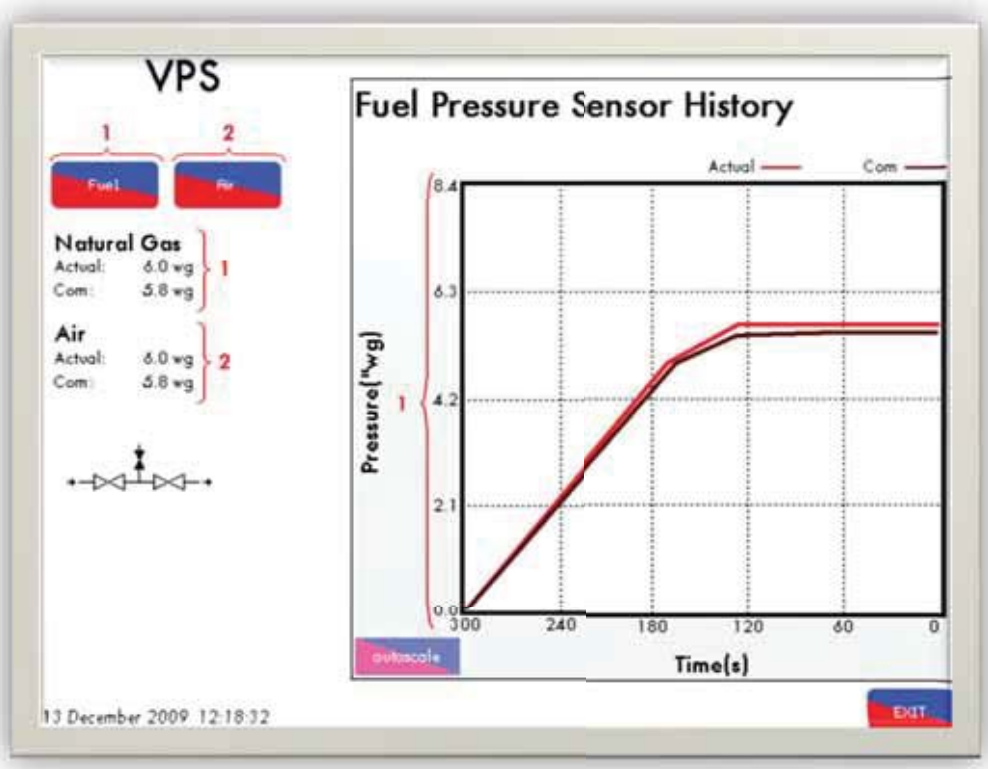

Figure 2.17.7.22 Valve Proving System Screen

The VPS screen in Figure 2.17.7.22 delivers the fuel and air pressure readings from burner start up to a maximum of 24 hours. This information is arranged in the following way:

1. Commissioned and current fuel pressure
2. Commissioned and current air pressure

Pressing this button will give the air pressure history graph.

Pressing this button will give the fuel pressure history graph.

2.17.7.23 EGA

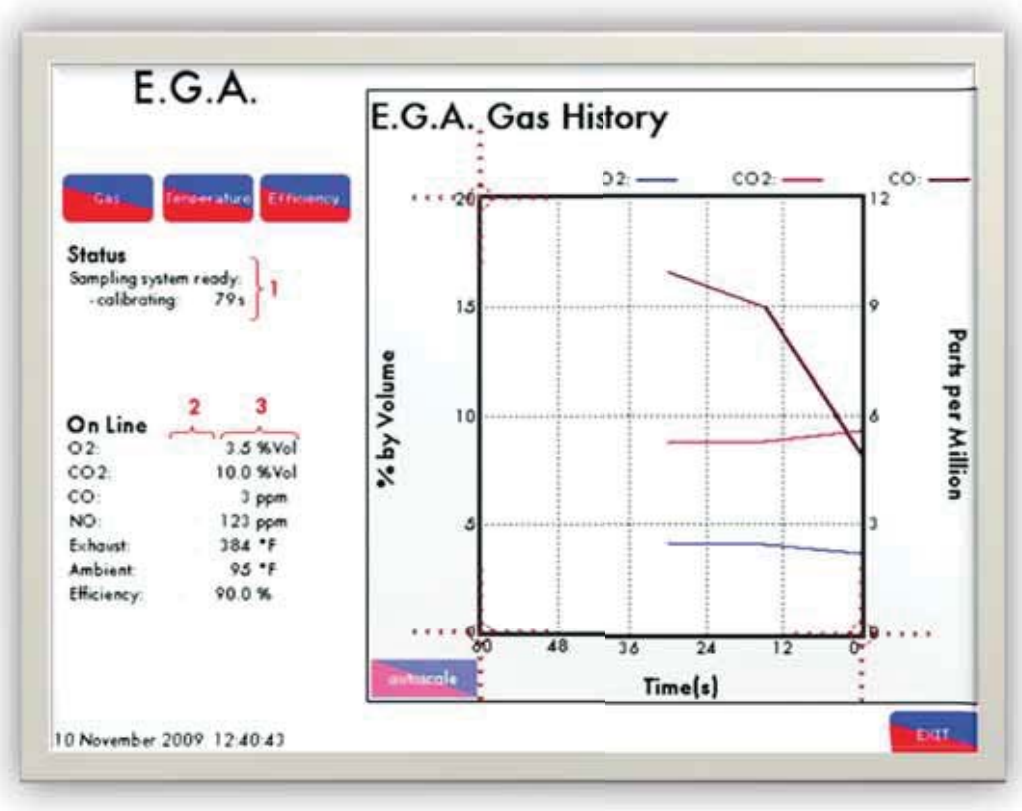

Figure 2.17.7.23 E.G.A. Screen

Upon entering the E.G.A. screen the display is set out as follows:

1. The current E.G.A. status (e.g. calibrating, sampling, etc.)
2. The gas values at time of commissioning.
3. The current values for each cell, the current temperatures and combustion efficiency.

Pressing this button will display the gas history graph. This graph shows the measured gas history for the past 24 hours.

Pressing this button will display the temperature history screen, both the ambient and exhaust gas temperature is displayed for the past 24 hours.

Pressing this button will display the efficiency history graph showing the combustion efficiency over the past 24 hours.

2.17.7.24 Combustion Map

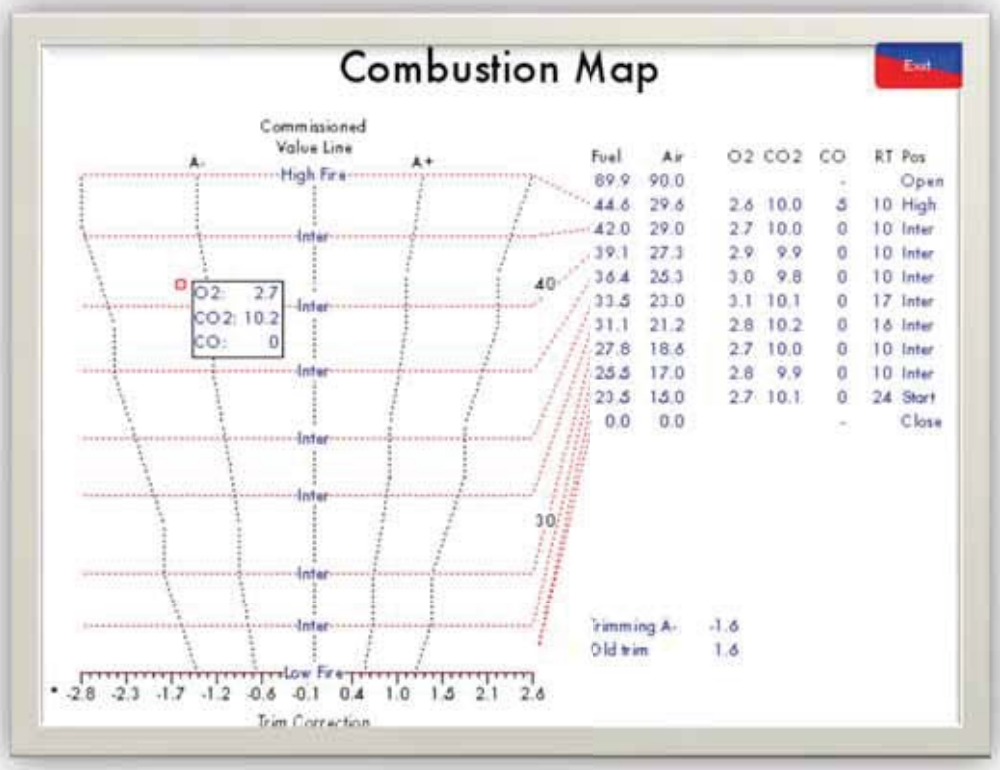

Figure 2.17.7.24 Combustion Map Screen

The combustion map screen is enabled by setting Parameter 74 to 1 prior to commissioning the Mk7 and also requires an EGA to be optioned.

The combustion map gives a real time visual indication of the 3 parameter trim function working to keep the combustion levels as near as possible to the commissioned combustion levels. The combustion map clearly shows the fuel curve positions on the right along with the commissioned EGA values for O2, CO2 and CO. The graphic on the left of the screen shows the amount of trim being added or subtracted by the Mk7 to control the emissions values. The red circle indicates the current position of the trim and the current combustion values.

2.17.7.25 Water Levels

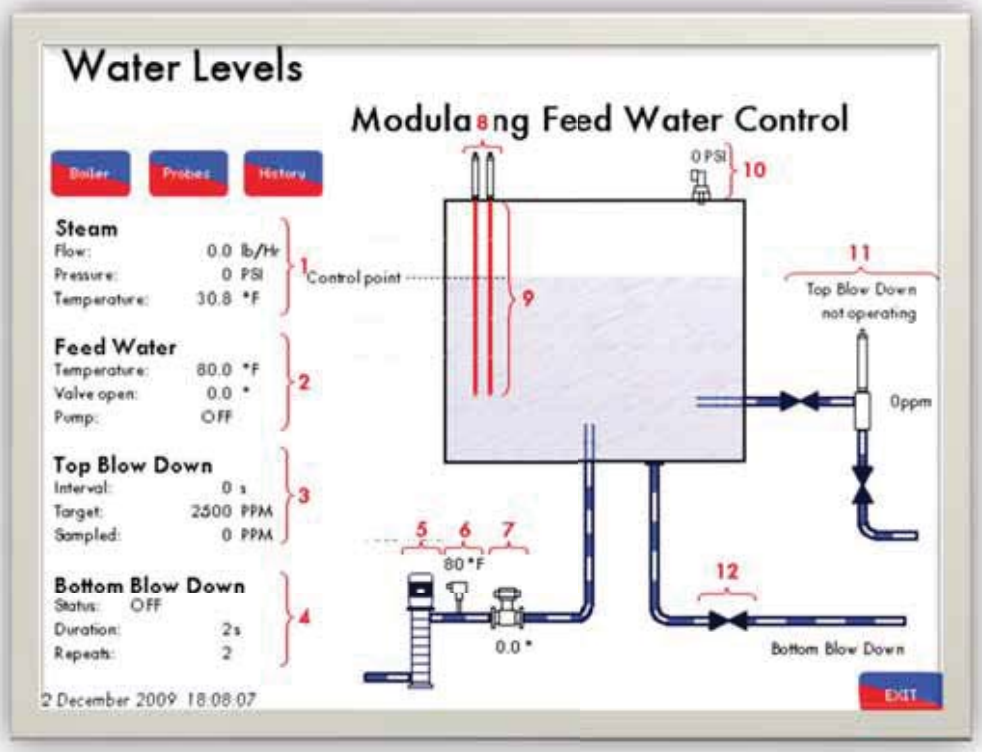

Figure 2.17.7.25.i Water Level Home Screen

Pressing the Water Level button will display the screen in Figure 2.17.7.25.i. All the Water Level information can be viewed here. The information is separated as follows:

1. Steam Information: the current rate of flow of steam, current pressure of steam and the temperature of the steam.
2. Feed Water information: temperature of the feed water, curren angular degrees of the feed water valve and pump status (on/off).
3. Top Blow Down information: Interval between samples, target solute concentration and sampled solute concentration.
4. Bottom Blow Down information: current status (on/off), duration of each bottom blow down an number of repeats.
5. Feed Water pump.
6. Feed Water temperature sensor and currently sampled temperature.
7. Feed Water valve and current angular position.
8. Capacitance Probes.
9. Current Operating point (Level of water measured)
10. Current steam pressure.
11. Current Top Blow Down status and currently sampled solute density.
12. Bottom Blow Down valve (on/off).

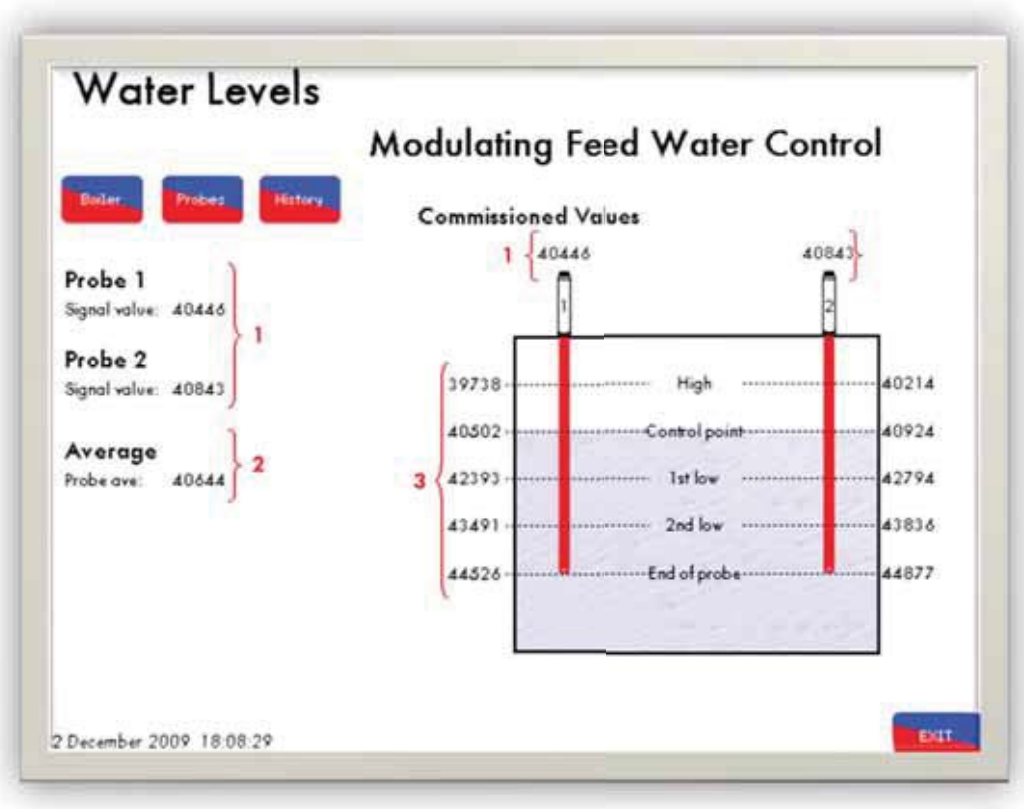

Figure 2.17.7.25.ii Water Levels Capacitance Probe Screen.

Pressing this button will display the detailed probe information as seen in the Figure above. This screen can also be accessed by pressing on the probes on the Home Screen. The information is arranged as follows:

1. Current capacitance values for probes 1 & 2.
2. The average of the two probe values.
3. Commissioned capacitance values for each control point.

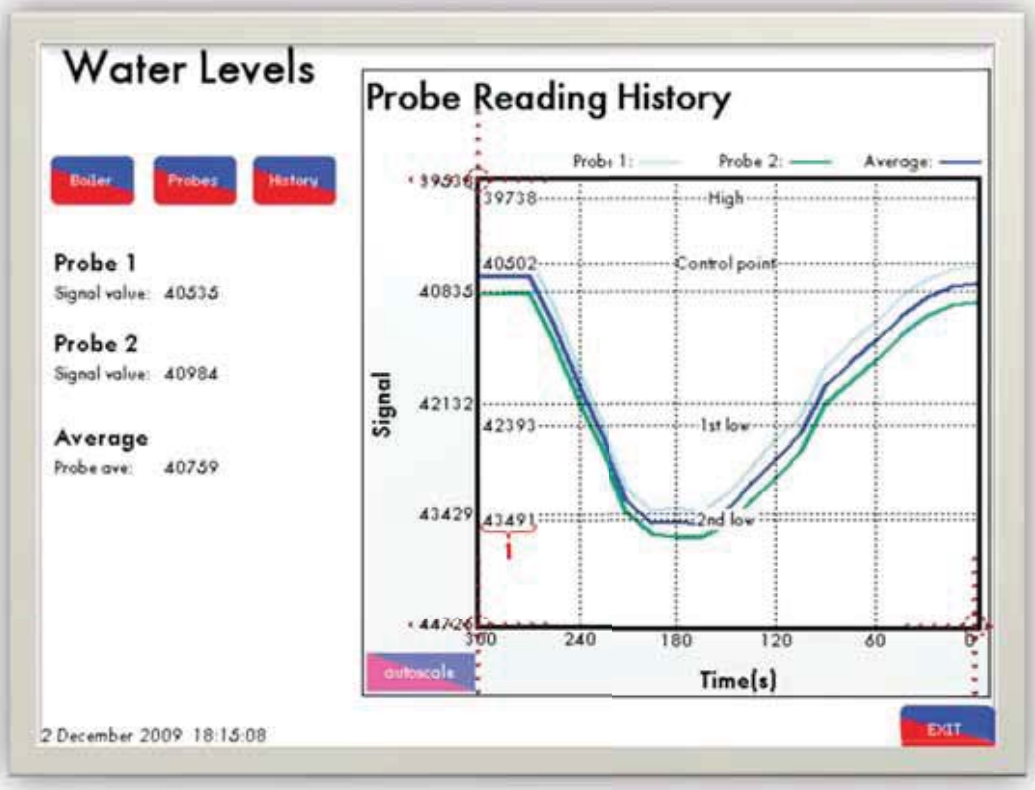

Figure 2.17.7.25.iii Water Level Probe History

Pressing this button will display a history of the capacitance values read over the past 24 hours as seen in the Figure above.

1. Commissioned values for each control point.

2.17.7.26 Steam Flow Metering

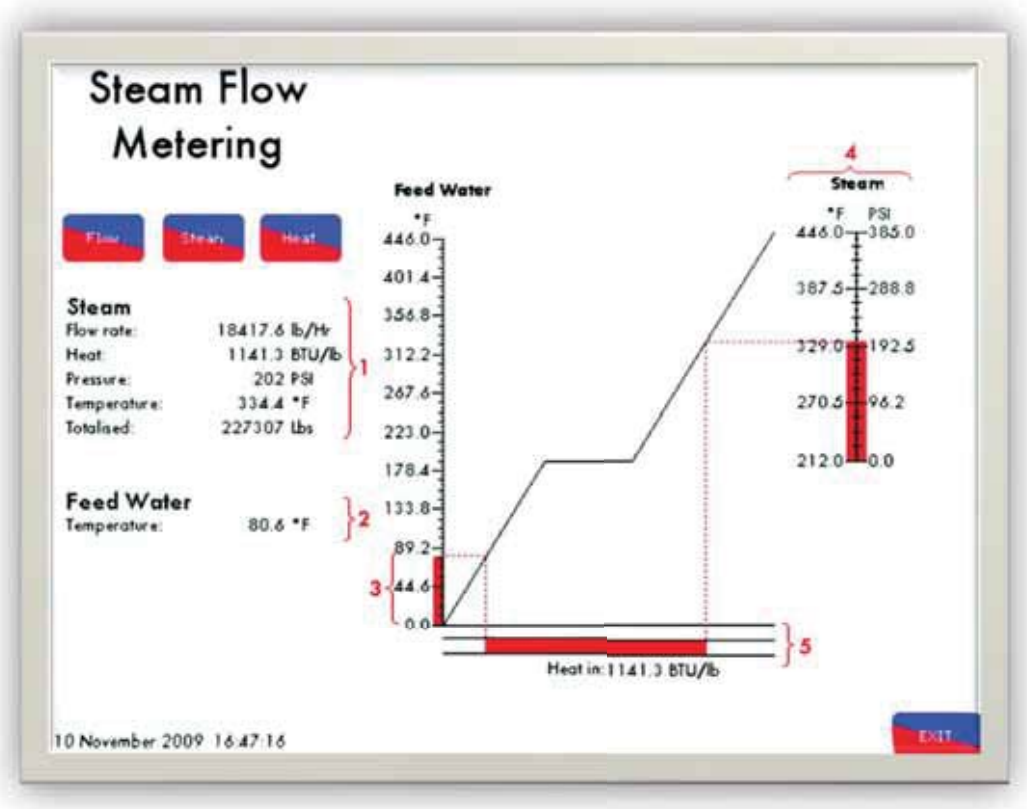

Figure 2.17.7.26 Steam Flow Metering Screen

The Steam Flow Metering screen displays the flow characteristics of both the feed water entering the boiler and the steam exiting the boiler. This screen can be entered by pressing the water pressure or temperature sensors on the Home Screen. The information is set out as below:

1. The rate of output of steam, heat input to produce said steam and the temperature of the steam.
2. The current feed water temperature.
3. Current feed water temperature.
4. Current steam temperature and pressure.
5. Amount of heat inputted to raise 1 lb of water at temperature 3 to the steam temperature and pressure 4.

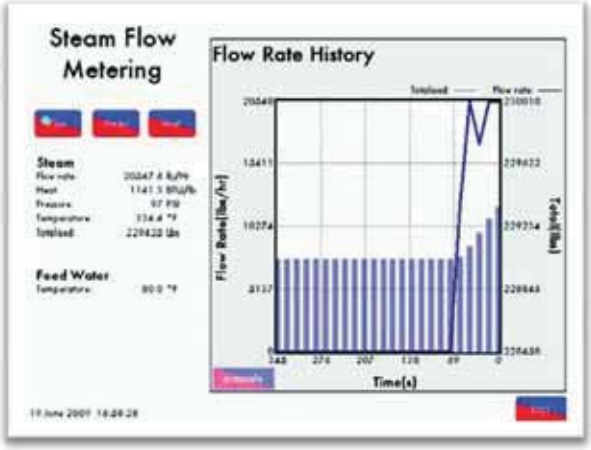

Pressing this button will show the flow rate history graph (Figure opposite). The graph displays the current rate of flow of steam out of the boiler and the totalised flow rate. This totalised flow rate is the cumulative total and not an average total.

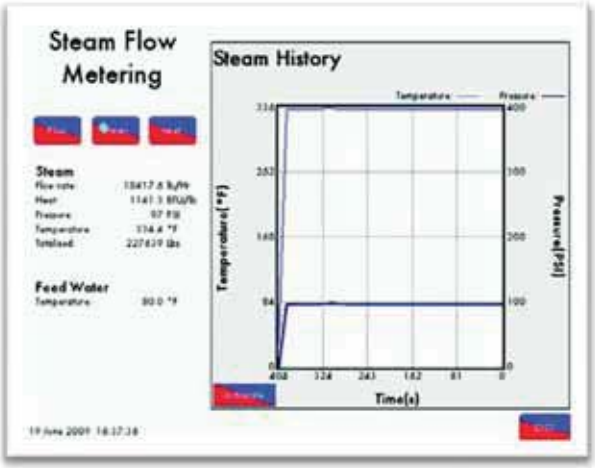

Pressing this button displays the steam history graph. This graph displays the temperature and pressure of the steam inside the boiler over a 24 hour period.

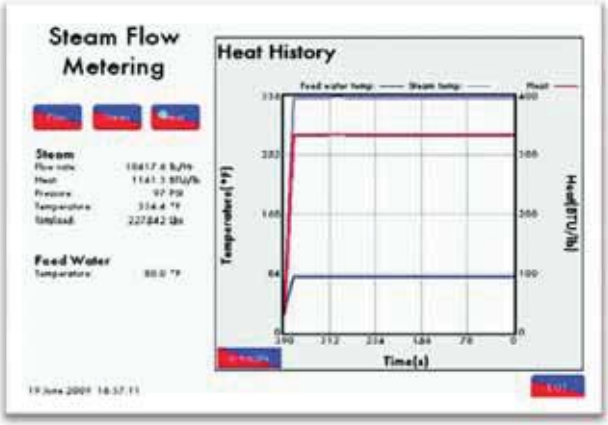

Pressing this button displays the temperature history of both the feed water and steam. It will also display the current heat input.

2.17.7.27 Outside Temperature Compensation

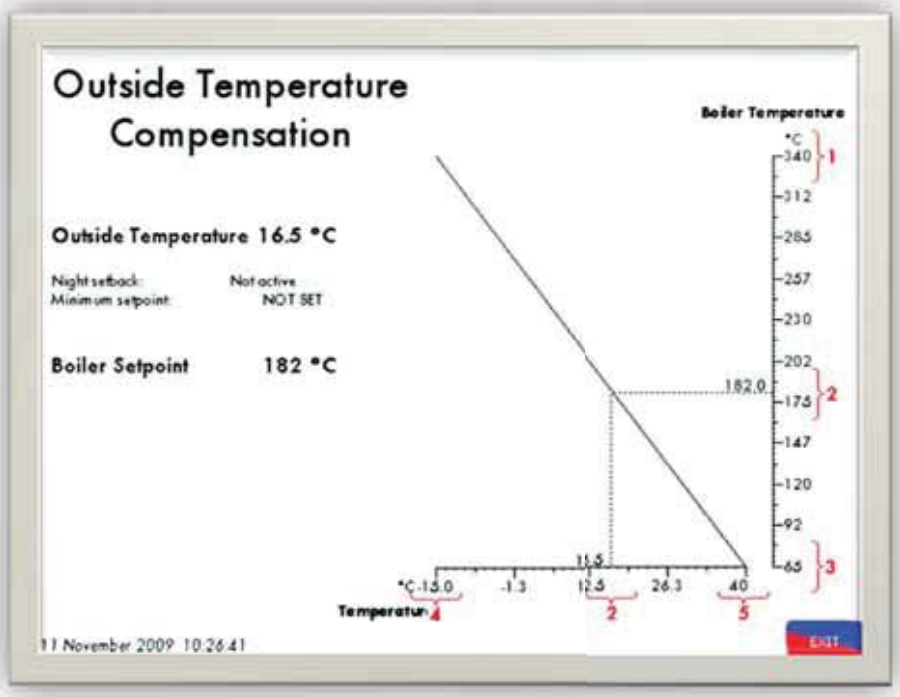

Figure 2.17.7.27 Outside Temperature Compensation Screen

The Outside Temperature Compensation screen shows the current outside temperature and the current calculated boiler setpoint. To enable Outside Temperature Compensation set Option 80 to 1.

1. Maximum boiler required setpoint at minimum outside temperature (Option 81).
2. Current outside temperature and calculated required setpoint.
3. Minimum boiler required setpoint at maximum outside temperature (Option 83).
4. Minimum outside temperature (Option 82).
5. Maximum outside temperature (Option 84).

Note: If the actual outside temperature exceeds the boundaries set by Options 82 and 84, the boiler set point will remain at the maximum or minimum setpoints specified by Options 81 and 83.

2.17.7.28 Lockout Record

The lockouts screen lists the last 16 lockouts to occur in chronological order.

Lockouts | MI Errors | EGR Errors

Lockouts 1		Phase 2	Occurred 3	Reset 4
1	Input fault	Idle	13 Jul 2011 02:08	13 Jul 2011 02:08
2	No flame signal	Pilot on	12 Jul 2011 16:25	12 Jul 2011 16:25
3	No flame signal	Main flame proving	12 Jul 2011 15:15	12 Jul 2011 15:16
4	Terminal 86 inverse	Standby	12 Jul 2011 12:22	12 Jul 2011 12:27
5	IR Comms timeout	Firing	12 Jul 2011 10:16	12 Jul 2011 10:22
6	IR Comms timeout	Idle	5 Jul 2011 12:18	5 Jul 2011 12:21
7	Input fault	Idle	28 Jun 2011 11:36	28 Jun 2011 11:37
8	Simulated flame	Recycle	12 Jun 2011 18:16	12 Jun 2011 18:16
9	No flame signal	Firing	12 Jun 2011 18:13	12 Jun 2011 18:16
10	No flame signal	Firing	12 Jun 2011 18:06	12 Jun 2011 18:07
11	Simulated flame	VPS bleed open	10 Jun 2011 18:37	10 Jun 2011 18:38
12	No flame signal	Firing	10 Jun 2011 17:32	10 Jun 2011 18:36
13	No flame signal	Firing	10 Jun 2011 17:04	10 Jun 2011 17:14
14	No flame signal	Firing	10 Jun 2011 13:05	10 Jun 2011 13:53
15	No flame signal	Firing	10 Jun 2011 09:37	10 Jun 2011 10:08
16	No flame signal	Pilot proving	10 Jun 2011 08:51	10 Jun 2011 08:51

Reset... | Exit

Figure 2.17.7.28 Lockout Record Screen

The format used display the information is:

1. Lockout description
2. Phase of the firing sequence at which lockout occurred
3. Date and time of the lockout. Note: time used is the global time set in Section 2.17.7.12
4. Date and time when the lockout was reset.

2.17.7.29 Water Level Alarm

Figure 2.17.7.29 Water Level Alarm Screen

The Water Level Alarm screen displays the last 16 Water Level alarms and the following information:

1. The type of Water Level alarm
2. Phase of the firing sequence at which the lockout occurred
3. The date and time at which the alarm occurred
4. Date and time when the alarm was reset

2.17.7.30 MM Errors

The MM error screen will appear when an error occurs. Errors are major faults that cause the MM to cease the functioning of all Autoflame controlled components simultaneously. The MM must be restarted manually for the error to be reset.

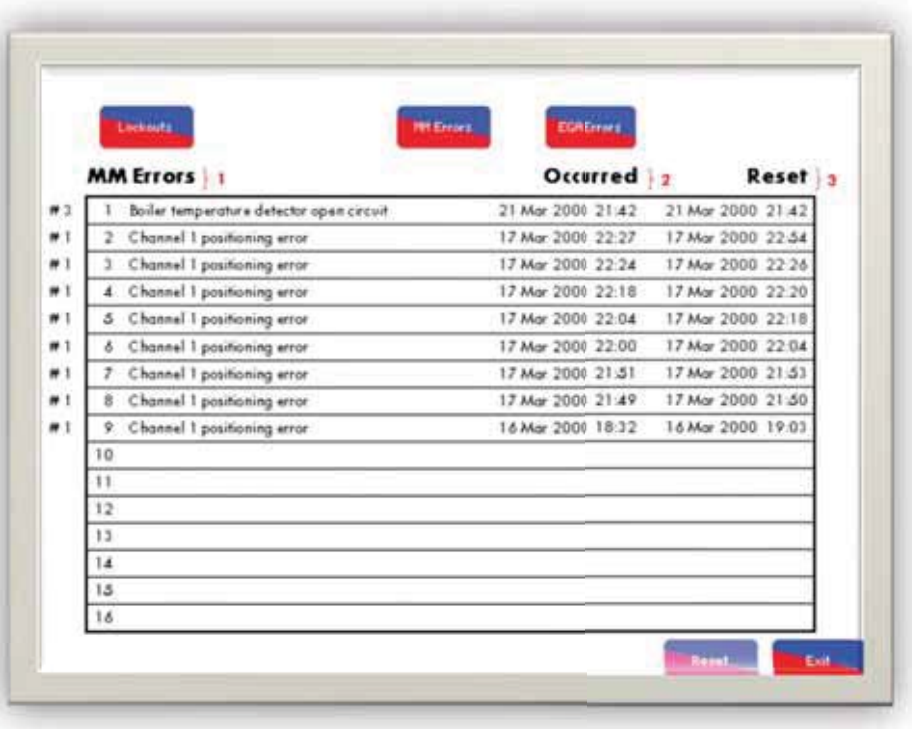

Figure 2.17.7.30 MM error screen

1. The cause of the error (Please refer to Section 2.17.5 for a list of error codes).
2. The date and time when the error occurred.
3. The date and time when the error was reset.

After the MM has been restarted the error screen will reappear until the cause of the error has been resolved.

2.17.7.31 First Outs

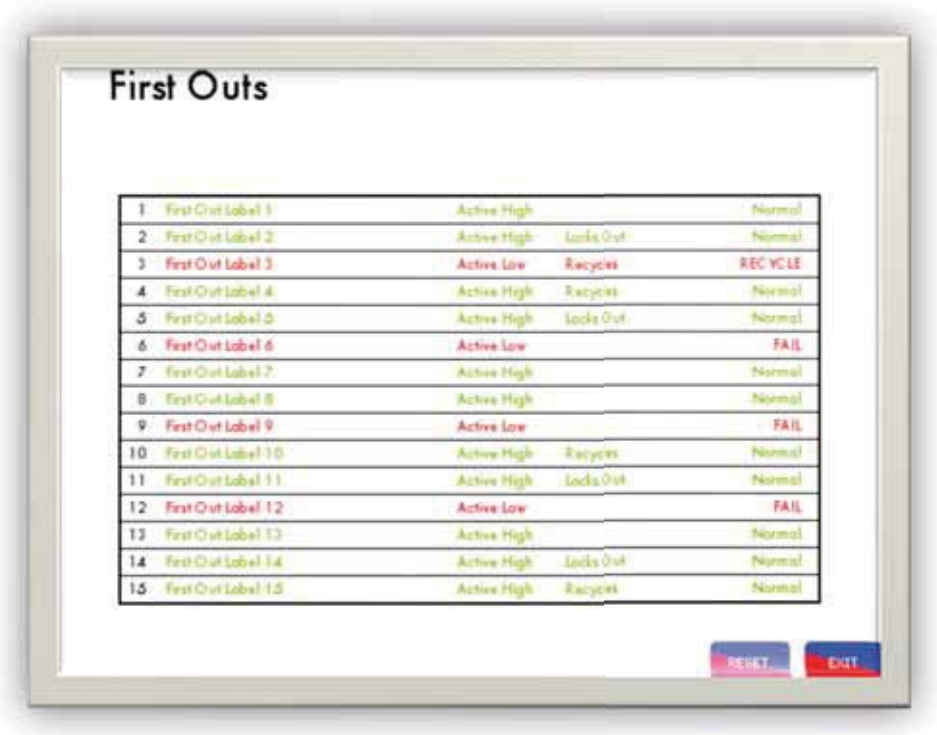

Figure 2.17.7.31 First Out Log Screen

The First Outs screen displays all uploaded First Out data. This data is displayed across 4 columns.

1. First Out label.
2. If the First out is active high or low.
3. Action taken if First Out fails.
4. Current status.

Press and hold this button for 5 seconds to reset a First Out alarm. It is only available in the event of an alarm.

Note: When a First Out is set to recycles the First Out alarm will reset itself if the applicable First Out connection becomes inactive (i.e.no longer failing).

2.17.8 TWIN BURNER OPERATION

2.17.8.1 Twin Burner Commissioning

Options 14 and 33 have to be set to correctly implement twin burner operation. For commissioning purposes it is easiest to set Option 14 on each M.M. to value 0, and commission each burner individually. **It is the commissioning engineer's responsibility to ensure that no adverse effects are caused as a result of this, particularly, stress to a boiler not designed to have only one burner firing. If this is the case then both burners must be commissioned simultaneously.**

AFTER COMMISSIONING SET OPTION 14 TO IT'S TWIN BURNER VALUE ON BOTH M.M.s

Before commencing commissioning set the following options (refer to options section for more details):

Option 33:

The ID number for the MMs must be set correctly. The master burner must have an odd numbered ID number and the slave burner must have the next consecutive even numbered ID. If the master MM is to 5, then the slave MM must be set to 6.

Other options may be set as usual.

2.17.8.2 Normal Operation

Only the odd numbered M.M. needs an input on Terminal 88 to make this burner the master burner. If a connection is made to the even number M.M. it will be ignored. The same applies for the hand/auto/ low flame hold inputs on Terminals 94/95, i.e. they do not need any connection on the even number M.M. if Option 14 = 1. If Option 14 = 2 then Terminals 94/95 should be wired as normal for hand operation.

The even number burner always takes its load index from the odd number burner including when in 'Hand' mode. If communications between the two burners fail, each M.M. will open its internal stat and approximately every three seconds the displays on each M.M. show a flashing ERROR 100 to indicate a communications failure if Option 14 = 1. If Option 14 = 2 then the 2 M.M.s run stand-alone.

When entering the flow metering for sequencing purposes it is necessary to put both M.M.s into the "Flow Metering" mode at the same time,

i.e. Do not set the Fuel Flow Metering on one MM then the other as this could lead to thermal stress on the boiler as there will be a difference in firing rate between the two burners.

Also to avoid thermal stresses the Fuel Flow Metering "points" must be entered at the same time on both MM's so that both MM's have the same firing. i.e. "point" 10 must be done on both MM's before entering "point" 9.

If Option 14 = 1, i.e. both burners fire simultaneously and together at all times, then the internal stat of both M.M.s will open if there is a period of more than 10 seconds when one M.M. is modulating and the other is not. Therefore, both burners will be off. If one burner locks out then the other burner will shut down immediately.

There are various points that are checked when the system starts up, such as position to purge, purge, position to start, ignition and modulation. This ensures that both burners are operating together and simultaneously.

The load detector input in the even numbered M.M. can be left open circuit, it will not be error checked.

If an error condition arises on one or other of the M.M. units and option 14 = 1 then the other unit will open its internal stat and flash ERROR 100.

2.17.8.3 Twin Burner Applications With Water Level Control

This is a very important note for twin burner applications in which the water level controls are being used.

The master MM must have the Water Level PCB and its identification number must be set to an ODD number. The slave must not contain a Water Level PCB and its identification number set to the next consecutive EVEN number (compared to the master MM unit).

Both variants of twin burner (Option 14 = 1 or 2) are still possible.

There is a significant difference when Option 14=2. Both MM units must always be powered and have a fuel selected. If a burner is to be off it must be by means of Terminal 53 (burner ON/OFF). This is because the slave MM must know from the master if there is a Water Level running on the system.

If using the water level control the slave MM **MUST HAVE** identical software to the water level MM unit, i.e. the MM, BC, DI must be the same for both units. **THIS IS IMPERATIVE**. For example, this enables the slave MM to recognize water level control and in the case of a 1st low the slave burner will shut down. On the slave unit the commissioning screen must be set to 'STANDARD WITHOUT WATER LEVEL'.

With the same software installed on both MM units and Option 14 set to 2, if a lockout occurs on the master MM the slave would continue to run. If a 1st low water level condition occurred on the Master MM (still in lockout mode) the slave MM would shut down.

If communication were lost between the units, i.e. Terminals 23 and 24, both MM units would shut down.

Also, if the software was not identical then the flashing ERROR 100 would occur.

2.17.8.4 Connection Between the Mk7 MM Modules for Twin Burner

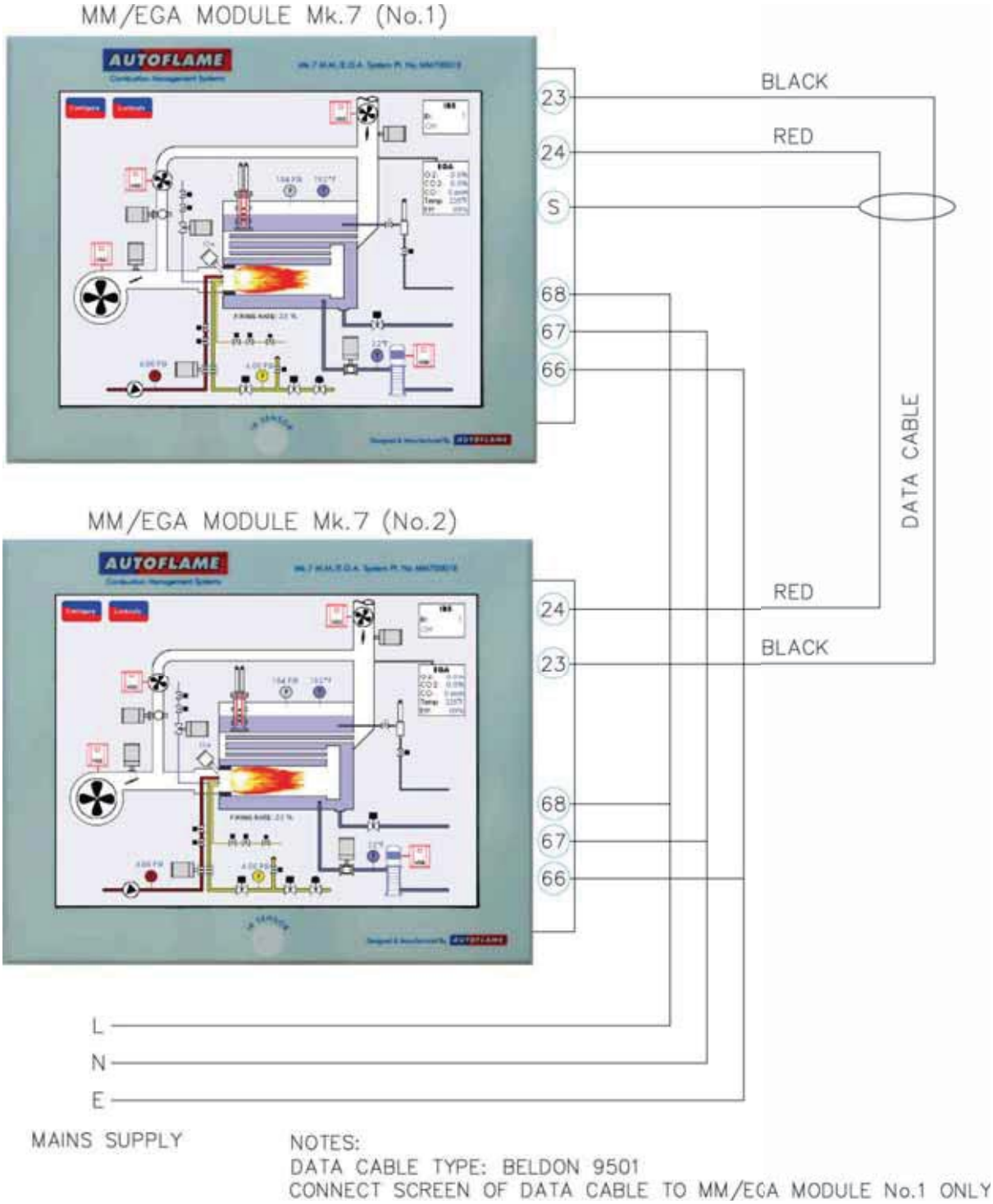

2.17.9 HAND/AUTO AND LOW FLAME HOLD FACILITIES

2.17.9.1 Low Flame Hold

'Low Flame Hold' and 'Hand' operation are only effective when the burner is firing. They have no effect when the burner is off or during the burner start up cycle. They are affected by applying a mains voltage signal to Terminal 95 for low flame hold, or Terminal 94 for hand operation. When these inputs have no mains signals applied, the system is in an automatic mode and modulates according to the PID control.

Low flame hold is brought into operation if Terminal 95 has mains voltage applied when the burner is modulating or firing. The minimum flame position will be maintained from now on, until the input from Terminal 95 is removed. Low flame hold will be established again by applying an input to Terminal 95 again. During low flame hold the PID control is ignored. When switching from Low Flame Hold to Auto the MM will increase/decrease its firing rate to the last known Auto firing rate.

'Hand' operation enables the fuel valve and air damper (and other channel) positions to be set to a specific position, in the range of minimum to maximum flame. Once a position has been set it is recorded in the M.M. units memory. As a default setting (Option 60) the next time the system is put into a hand operation, the system will take on a fuel/air ratio in the commissioning curve similar to the current firing rate. The M.M. system sets the channel positions to the hand position whenever there is a mains signal on Terminal 94. Once the burner is firing the 'hand' position can be adjusted by switching to the Status Screen and using the 'Increase' and 'Decrease' buttons underneath the current firing rate. When switching from Hand to Auto the MM will stay in the same servo positions and will not immediately increase or decrease its firing rate depending upon the actual and required temperature/pressure.

See Option 60 for information on bumpless transfer.

If Hand and Low Flame Hold are selected at the same time via Terminals 94 and 95, then Low Flame Hold takes priority.

Note: Lead/Lag and sequencing will not operate if either Terminal 94 or 95 has a mains voltage.

2.17.10 OTHER INFORMATION AND ILLUSTRATIONS

2.17.10.1 Mk 7 MM Fixing Holes & Dimensional Details

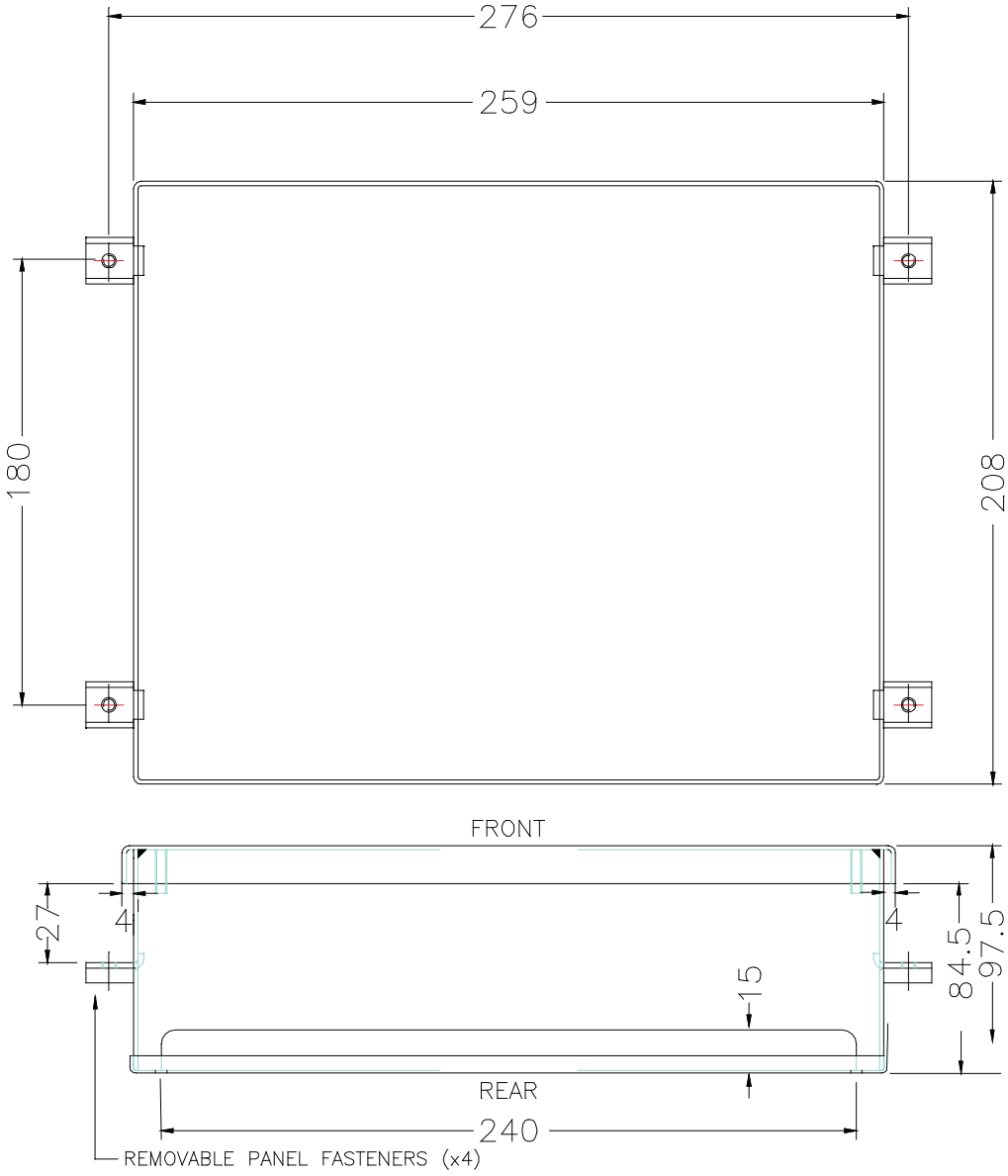

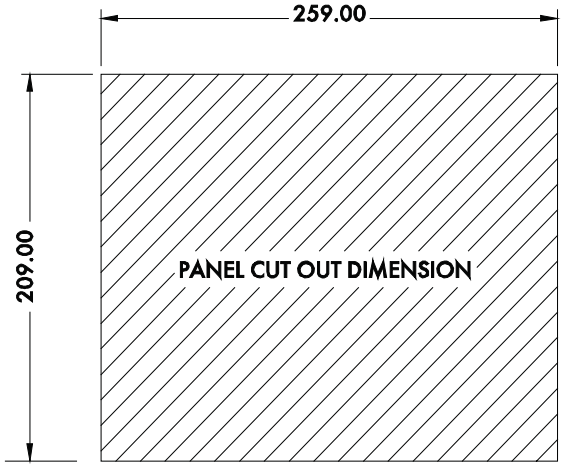

2.17.10.2 Schematic View Of IR Upload/Download

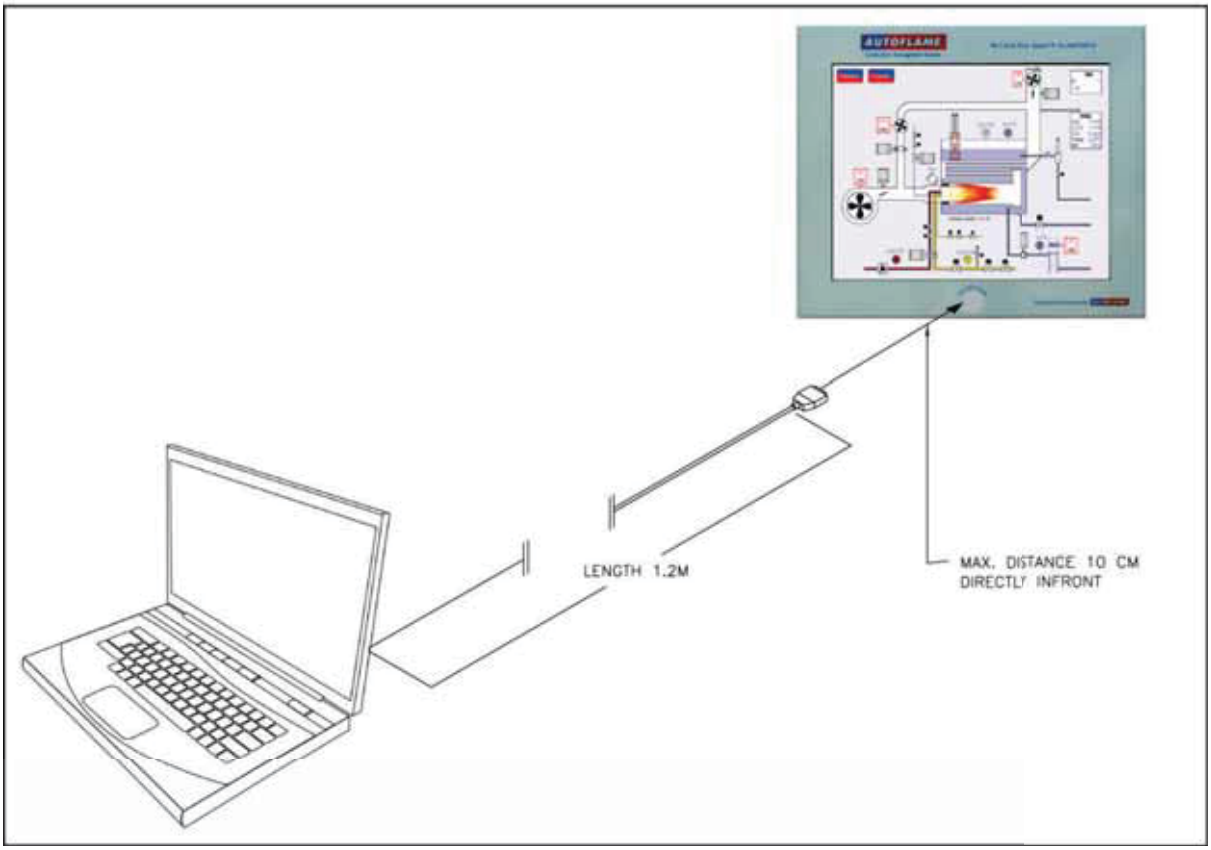

Software installation:

After inserting the CD, click view files when prompted or go through Computer on the Start menu to view the CD. To start the install double click on the application file on the CD. This file will take you through the installation process.

The second CD contains the ID.bin file, this file is necessary for the IR Upload/Download software to work without this file in the correct location the IR Upload/Download software will not open. The ID.bin file must be put in the same location as where the IR Upload/Download software is installed. This is typically C:\Program Files\Autoflame Engineering Ltd\IR Upload Download

As later improvements and revisions of the software become available, it is possible to download these from our website. However, the initial ID.bin file must be kept in order to keep you information and data. In order to use the upload/download software, it may be necessary to close any programs associate with the same port location, e.g. BlueTooth.

2.17.10.3 Using the IR Upload/Download Software

The first time the IR Upload/Download software is used the screen in Figure 2.17.10.3.i

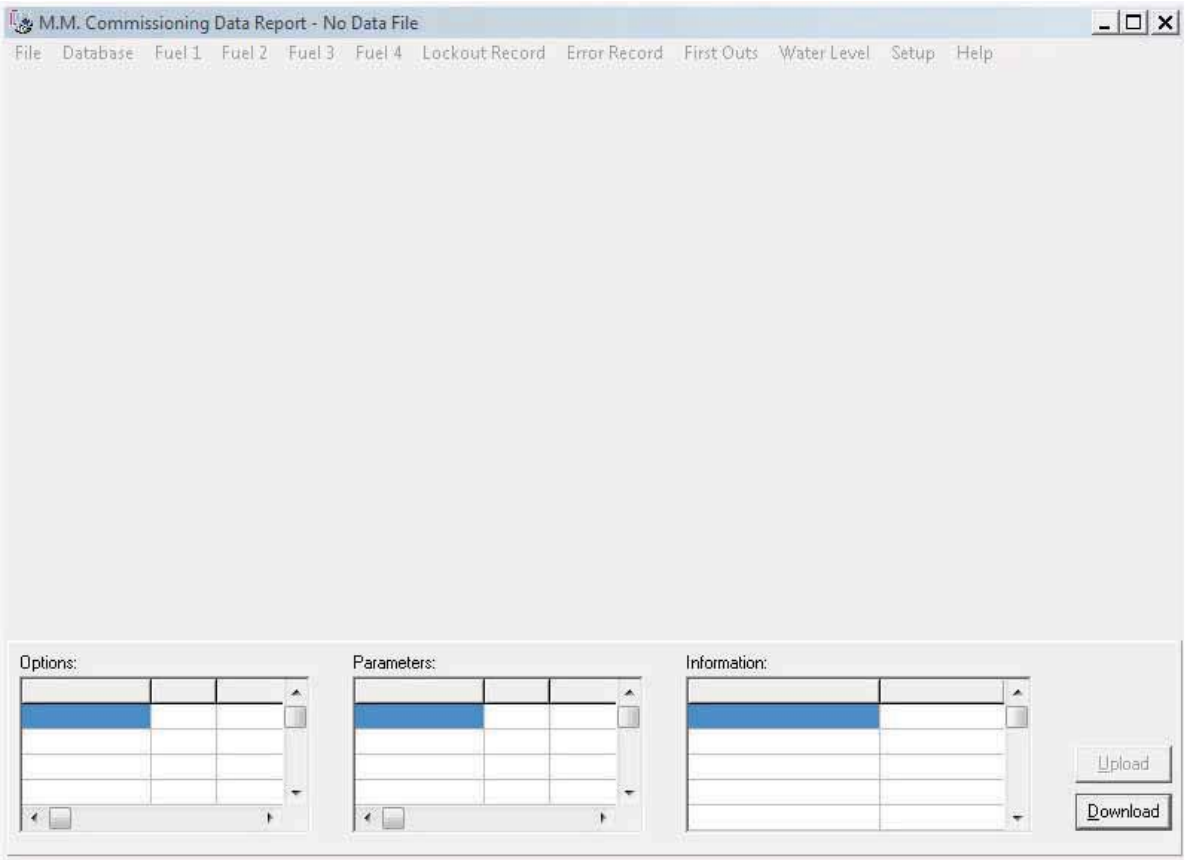

Figure 2.17.10.3.i.

For the IR Upload/Download software to work correctly first ensure that the port connections are setup correctly. To setup a port click on the setup tab in Figure 2.17.10.3.i and then port. Figure 2.17.10.3.ii will then appear, ensure that the port is the correct one for the IR Upload/Download lead and also ensure that error checking is set to standard for uploading and downloading to a Mk7.

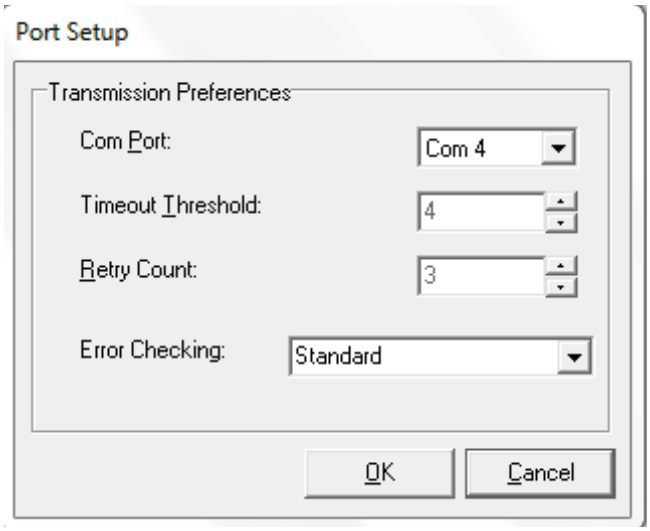

Figure 2.17.10.3.ii

Once the Ports have been set correctly it is necessary to create at least one site in the Database tab to be able to do a download. Figure 2.17.10.3.iii is shown when the Database tab is clicked, from here it is possible to create new sites on the database by pressing the + button or to view different sites by pressing the arrow buttons.

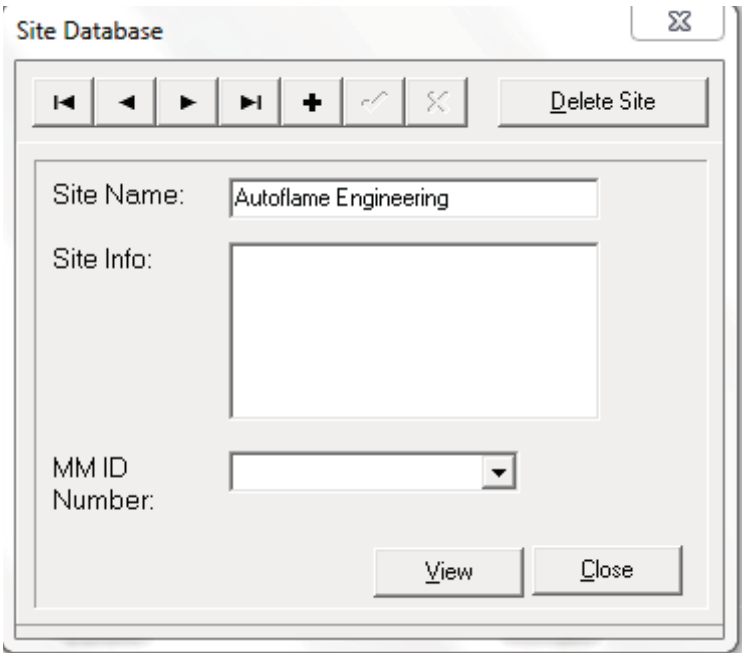

Figure 2.17.10.3.iii

To do a download of a Mk7 MM first ensure that the Mk7 is ready for downloading by going into commissioning mode on the Mk7. Next click on the download button on the upload/download software to bring up Figure 2.17.10.3.iv. Select a site and type in a site name, once you click ok the download process will begin so ensure that the IR Lead is facing the IR Port on the front of the Mk7.. **Note:** It is not necessary to enter the commissioning password when doing a download.

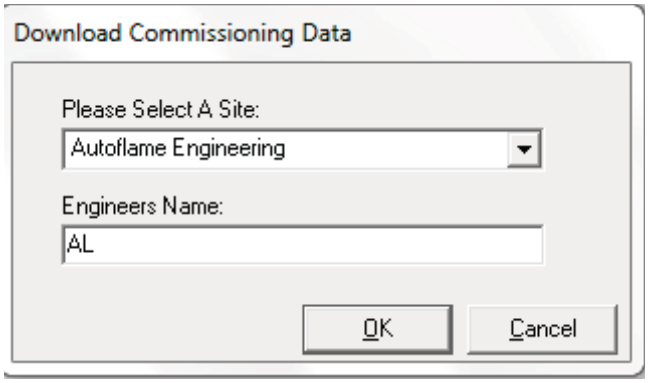

Figure 2.17.10.3.iv

Once the download is complete something similar to Figure 2.17.10.3.v will be shown. From this screen it is possible to view the fuel air ratios of all 4 fuels, the lockout and error records of the unit and the Options and Parameters for the unit. If a Water Level PCB is attached it is also possible to view the water level and first out data.

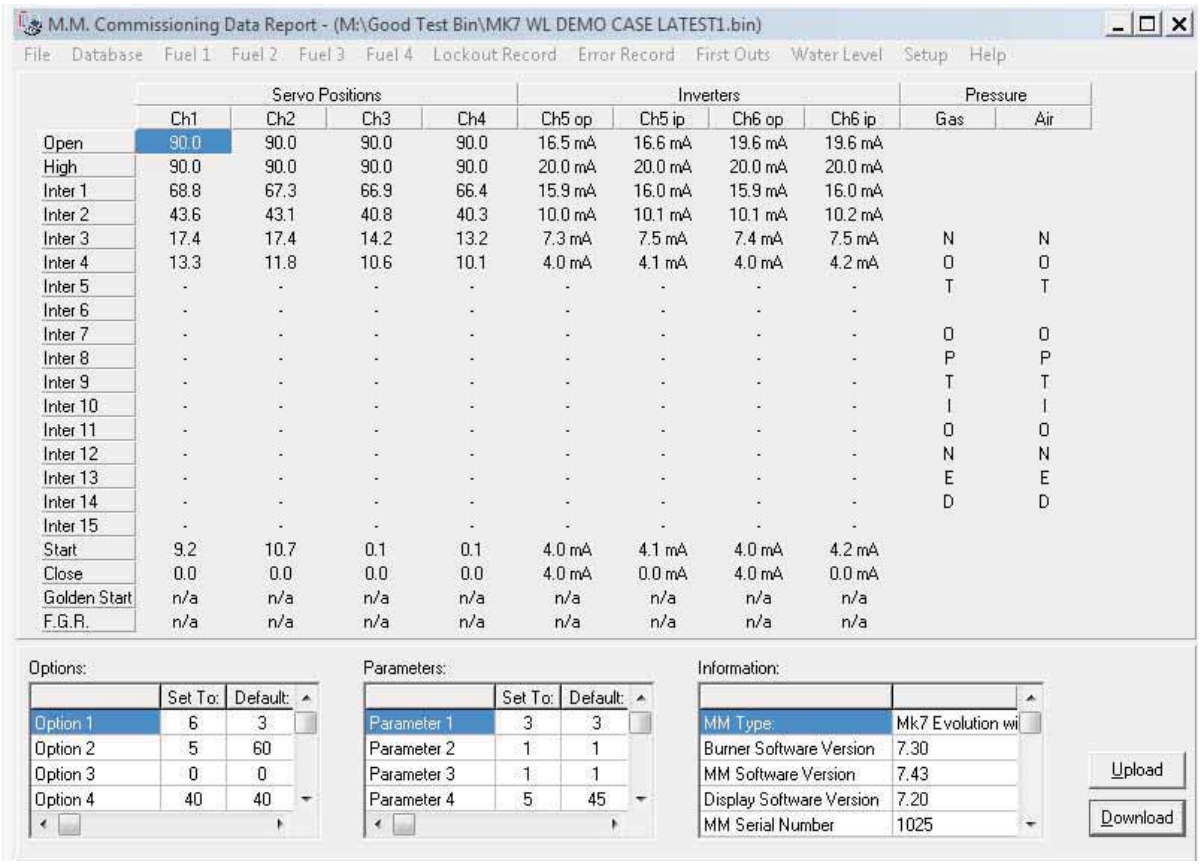

Figure 2.17.10.3.v

To do an upload to a Mk7 first ensure the Mk7 is ready to receive the upload by going to commissioning mode and entering the password on the keypad. Click the upload button on the IR Upload/Download software and you will be presented with Figure 2.17.10.3.vi. From Figure 2.17.10.3.vi choose what you wish to upload, Fuel Air Ratios and Options/Parameters, First Outs or Water Level data. Once you click OK the upload will begin so ensure the IR lead is facing the IR port on the Mk7. Once the Upload is complete the Mk7 will restart and go to commission mode automatically as the unit will be disabled. Enter the password on the keypad and enable the Mk7 as described in Section 2.17.2.2 also check that the Options and Parameters are set correctly. If the unit does not restart or does not go into commission mode then the upload has not be successful and will need to be re-attempted.

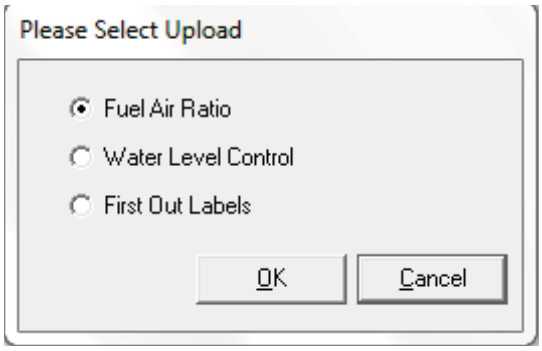

Figure 2.17.10.3.vi

IT IS THE RESPONSIBILITY OF THE FACTORY TRAINED TECHNICIAN TO ENSURE THAT AFTER AN UPLOAD ALL THE OPTIONS, PARAMETERS AND FUEL/AIR RATIO COMMISSION DATA ARE CHECKED FOR CORRECTNESS. FAILURE TO DO SO WILL RESULT IN SERIOUS EQUIPMENT DAMAGE, CRITICAL INJURY OR DEATH.

2.17.10.4 First Out Annunication

When the control circuit has a long series chain of various thermostats and switching elements, it is sometimes difficult to identify which element has opened the control circuit (see Figure2.17.10.4, below).

The First Out Annunciation can be set in any of the following ways:

Disabled- First Out does not appear on the MM screen (not in use).

Monitor- First Out status is viewed on the MM screen. The burner will continue to operate if a First Out fails.

Recycle – The burner will stop firing but will start up again once the error has been rectified with no manual intervention.

Non-Recycle- The burner will stop firing and will require a manual lockout reset for the burner to start up again.

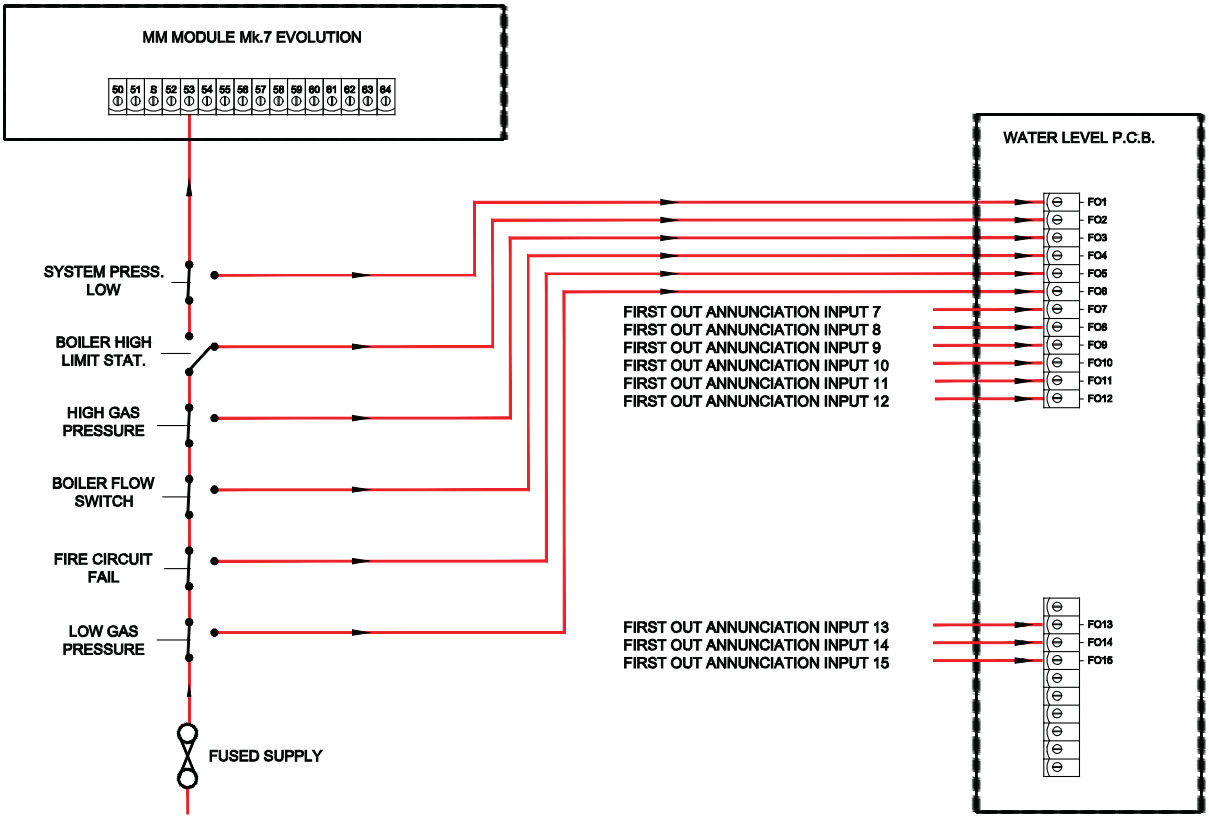

Figure: 2.17.10.4 First Out Wiring Schematic

2.17.10.5 Maintenance and Servicing

The Micro Modulation unit uses solid state technology. It requires no routine maintenance.

The positioning motors/gas/oil/FGR valves do require routine maintenance. Any fault associated with these parts is usually diagnosed by the M.M. Contact Autoflame for preventative maintenance procedures.

2.17.10.6 Installation Precautions

The reliability of the equipment may be impaired if used in environments where strong electromagnetic fields exist. If for example the equipment is installed in a boiler house where radio systems exist then additional EMC (Electro Magnetic Compatibility) measures may have to be considered.

2.17.10.7 External Modulation

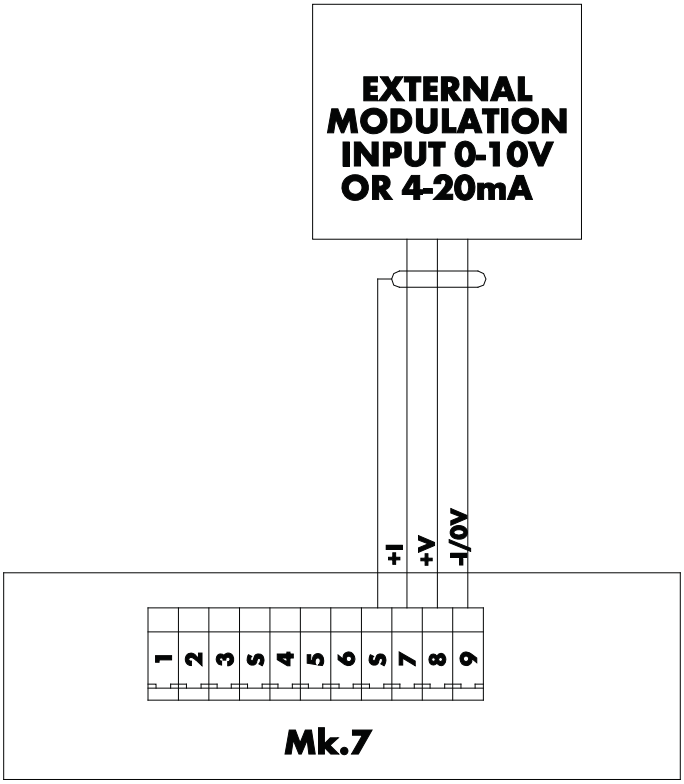

Figure 2.17.10.7 External Modulation Wiring

To use external modulation it is required to use a 0-10V or 4-20mA input on the terminals as detailed above. See Options 45 and 55 for setting external modulation and the two possible methods for setting this.

Important Note:

It is necessary to use a signal isolator to prevent any excessive voltages being applied to these terminals. The signal isolator used must have the following characteristics:

Signal Isolation Voltage – 3.75 kV
Creepage – 5mm
Clearance – 4mm
The equipment and cables must be housed in a clean environment – IP55

2.17.10.8 Automatic Commission Of Air Pressure Values

A facility has been added to the Mk7 so that the air pressure values for each fuel/air ratio point entered can be commissioned without having to carry out a full fuel air ratio commission.

To invoke this facility the system must already be commissioned. Option/parameter 150 must be set to value 7 then the enter button pressed. Option/parameter 147 must be noted and set to 0- off so that air pressure limit errors do not occur while the system is running.

Start up the system as normal. Once the burner is firing the system attains the high fire positions and samples and stores the air pressure at that point. The first fuel/air ratio inter point are then attained and the air pressure again sampled and stored. This process is repeated until all fuel/air ratio inter points and start positions are complete. The new air pressure values are then permanently stored and thereafter an MM ERROR is set - AIR RECOMMSSION (this is to bring to the attention of the operator that options/ parameters must be adjusted back to operational settings). The error must be cleared and Option/ Parameter 150 set back to 0. If not set back to 0 the air values will be commissioned again and the M.M. ERROR will ensue. Option/Parameter 147 must also be adjusted to the appropriate value.

THE FACTORY TRAINED TECHNICIAN MUST NOW CHECK THE SYSTEM FOR CORRECT OPERATION.

2.17.10.9 Automatic Commission Of Gas Pressure Values

A facility has been added to the Mk7 so that the gas pressure values (during VPS and for each fuel/air ratio point entered) can be commissioned without having to carry out a full fuel air ratio commission.

To invoke this facility the system must already be commissioned on fuel /air ratio. Option/parameter 150 must be set to value 8 then the enter button pressed. Options/parameters 136/137 must be noted and set to 0- off so that gas pressure limit errors do not occur while the system is running.

Start up the system as normal. Once the burner is firing the system attains the high fire positions and samples and stores the gas pressure at that point. The first fuel/air ratio inter positions are then attained and the gas pressure again sampled and stored. This process is repeated until all fuel/air ratio inter and start positions are complete. The new gas pressure values are then permanently stored and thereafter an MM ERROR is set - GAS RECOMMSSION (this is to bring to the attention of the operator that options/parameters must be adjusted back to operational settings). The error must be cleared and option/parameter 150 set back to 0. If not set back to 0 the gas values will be commissioned again and the MM ERROR will ensue. Options/Parameters 136/137 must also be adjusted to their appropriate values.

THE FACTORY TRAINED TECHNICIAN MUST NOW CHECK THE SYSTEM FOR CORRECT OPERATION.

Check the gas pressure commission value displayed during VPS operation. Once the burner is firing, check the gas pressure commission values for each fuel/air ratio point entered - this can be achieved by means of the hand operation facility.

SECTION 2.18: MINI MK7 EVO MM – MICRO MODULATION

2.18.1 MINI MK7 EVO MM CONTROL UNIT

2.18.2 MINI MK7 EVO DIMENSIONS AND ILLUSTRATIONS

2.18.2.1 Front Facia

2.18.2.2 Enclosure Dimensions

2.18.2.3 Wiring Schematic

2.18.3 SETUP PROCEDURES

2.18.3.1 Introduction

2.18.3.2 Autoflame Servomotors

2.18.3.2.1 Positioning Motors Direction Change

2.18.3.2.2 Servomotor Positioning Diagrams

2.18.3.3 Servomotor Setup Procedure

2.18.3.4 Issues to Consider When Using Autoflame Valves

2.18.4 OPTIONS AND PARAMETERS

2.18.4.1 Options

2.18.4.2 Parameters

2.18.5 VALVE PROVING AND MONITORING

2.18.5.1 VPS In the Mini Mk7

2.18.5.2 Steam Pressure Sensor

2.18.5.3 Boiler Water Temperature Sensor

2.18.5.4 Outside Temperature Compensation

2.18.5.5 OTC Sensor

2.18.6 VALVE COMMISSIONING

2.18.6.1 Air Pressure Switch

2.18.7 VARIABLE SPEED DRIVE (VSD)

2.18.7.1 Input and Output Signals in Relation to Frequency

2.18.7.2 Operational Characteristics of Inverter Output/MM Module Input Relation to Frequency

2.18.7.3 VSD Safety Software

2.18.7.4 VSD Setup

2.18.7.4.1 Calibrating the Mini Mk7 EVO Output Range to the VSD

2.18.8 COMMISSIONING THE COMBUSTION CURVE

2.18.8.1 Notes on Programming the Combustion Curve

2.18.8.2 Commissioning With The Quick Trim Function (Systems With An EGA)

2.18.8.3 Single Point Change

2.18.8.4 Golden Start

2.18.8.5 Flue Gas Recirculation

2.18.8.5.1 FGR Start Position Choices

2.18.8.5.2 FGR Considerations

2.18.8.6 Fuel Flow Metering

2.18.9 FLAME SAFEGUARD

2.18.9.1 Introduction

2.18.9.1.1 Flame Safeguard Setup

2.18.9.1.2 Lockout Considerations

2.18.9.1.3 Flame Safeguard Operation

2.18.9.2 Interrupted Pilot

2.18.9.3 Intermittent Pilot

2.18.9.4 Lockout

2.18.9.5 Post Burner Operation VPS

2.18.9.6 Self Check UV Scanner

2.18.9.7 Self Check Side View UV Scanner

2.18.9.8 Standard European Side Viewing UV Scanner

2.18.9.9 Standard North Amercian End View UV Scanner

2.18.9.10 Selection of UV Scanner Types

2.18.9.10.1 Normal Sensitivity

2.18.9.10.2 High Sensitivity

2.18.9.11 UV Self Adaptive Pulse Width Modulation

2.18.9.12 IR Self Check End View Scanner

2.18.10 THE PID CONTROLLER

2.18.10.1 Introduction

2.18.10.2 Proportional Band

2.18.10.3 Integral Control

2.18.10.4 Dervivative Control

2.18.10.5 PID Controller Considerations

2.18.11 EXTERNAL MODULATION

2.18.12 PROVING VALVES AND END SWITCH SETUP

2.18.13 CONNECTION BETWEEN THE MINI MK7 EVO AND AN AUTOFLAME EXHAUST GAS ANALYSER (EGA) UNIT

2.18.13.1 Connection Between The Mini Mk7 EVO And An O2 Interface Module

2.18.14 BURNER ON/OFF AND SETPOINT DISPLAY MANIPULATION

2.18.15 OPERATING SCREENS

2.18.15.1 Setting The Time and Screen Contrast

2.18.15.1.1 Setting the Time and Date

2.18.15.1.2 Adjusting the Screen Contrast

2.18.15.2 Setting Run Times

2.18.16 MINI MK7 EVO ELECTRICAL SPECIFICATION

2.18.16.1 Classfications

2.18.16.2 Inputs and Outputs

2.18.16.3 Cables Specifications

2.18.16.4 Terminals Descripition

2.18.17 ERROR CHECKING, SELF DIAGNOSTICS FAULT ANALYSIS AND ID CODES

2.18.17.1 Self Diagnostic Fault Identification Software

2.18.17.2 Key to the Errors Detected on the Mini Mk7 EVO System

2.18.17.3 Burner Control Lockouts

2.18.18 HAND, LOW FLAME HOLD AND AUTO MODES OF OPERATION

2.18.18.1 Hand and LFH Modes of Operation

2.18.18.2 Auto Mode of Operation

2.18.19 IR UPLOAD/DOWNLOAD SOFTWARE

2.18.19.1 Software Installation

2.18.19.2 Using the IR Upload/Download software

2.18.1 MINI MK7 EVO MM CONTROL UNIT

Figure 2.18.1.i Mini Mk7 EVO front panel with L.C.D. display

This manual provides information on the setup and operating features of the Autoflame Mini Mk7 EVO MM Control unit. The literature presented here assumes the reader is familiar with Autoflame products. Please contact the Autoflame Technical Sales department for clarification on any topic covered in the following literature or to enquire about product training. To ensure optimal operation of a combustion process, the Mini Mk7 EVO meets the following two requirements:

1. The air to fuel ratio for optimal combustion is maintained to ensure complete combustion within the limitations of the combustion head design. These settings, once inputted, are repeatable to a high degree of accuracy when compared to commissioned values.
2. The setpoint temperature or pressure of the boiler is monitored by the combustion system at all times so that exactly the right amount of fuel and air is supplied at all times.

Autoflame Engineering were the first in the world to develop a system that overcomes the unreliability of mechanical systems, involving CAM and linkage joints, by utilising the latest micro processor technology. The Micro Modulation (MM) Mini Mk7 EVO system provides an easily programmable and flexible means of optimising combustion quality throughout the firing range, while ensuring the temperature or pressure is maintained to 1C (2F)or 1.5PSI. At the heart of this system is the control module, which contains the micro computer and power supply. The front panel of the control module features a key pad for data entry and includes an LCD display, as shown in Figure 0.i

The Mini Mk7 EVO unit is capable of controlling a number of variables involved in a combustion process, shown in Figure 2.18.1.ii (please contact the Autoflame Technical Sales department if more information is required on the application of the Mini Mk7 EVO to combustion processes). Its capabilities include:

- 2 Fuel Curve capability.
- 3 Servomotor channel control.
- 1 Variable Speed Drive (VSD) channel control.
- Internal flame safeguard control.
- UV, IR and Ionisation Rod flame detection - connected individually or in parallel.
- Mini Mk7 EVO Intelligent Boiler Sequencing (I.B.S.).
- Precise target setpoint control through a reliable PID controller..
- In parallel with an Autoflame Exhaust Gas Analyser (EGA) the Mini Mk7 EVO unit is capable of modulating a combustion process through 3 parameter trim, O2, CO2 and CO.
- Flue Gas Recirculation (FGR) management.
- Outdoor temperature compensation (OTC)

Additionally, the Mini Mk7 EVO unit is fully compliant with

- All National Fire Protection Agency (NFPA) guidelines.
- Rated by the National Electrical Manufacturers of Association (N.E.M.A.) as N.E.M.A. 4.
- International Protection Code Rating of IP 64 (dust tight and water resistant).

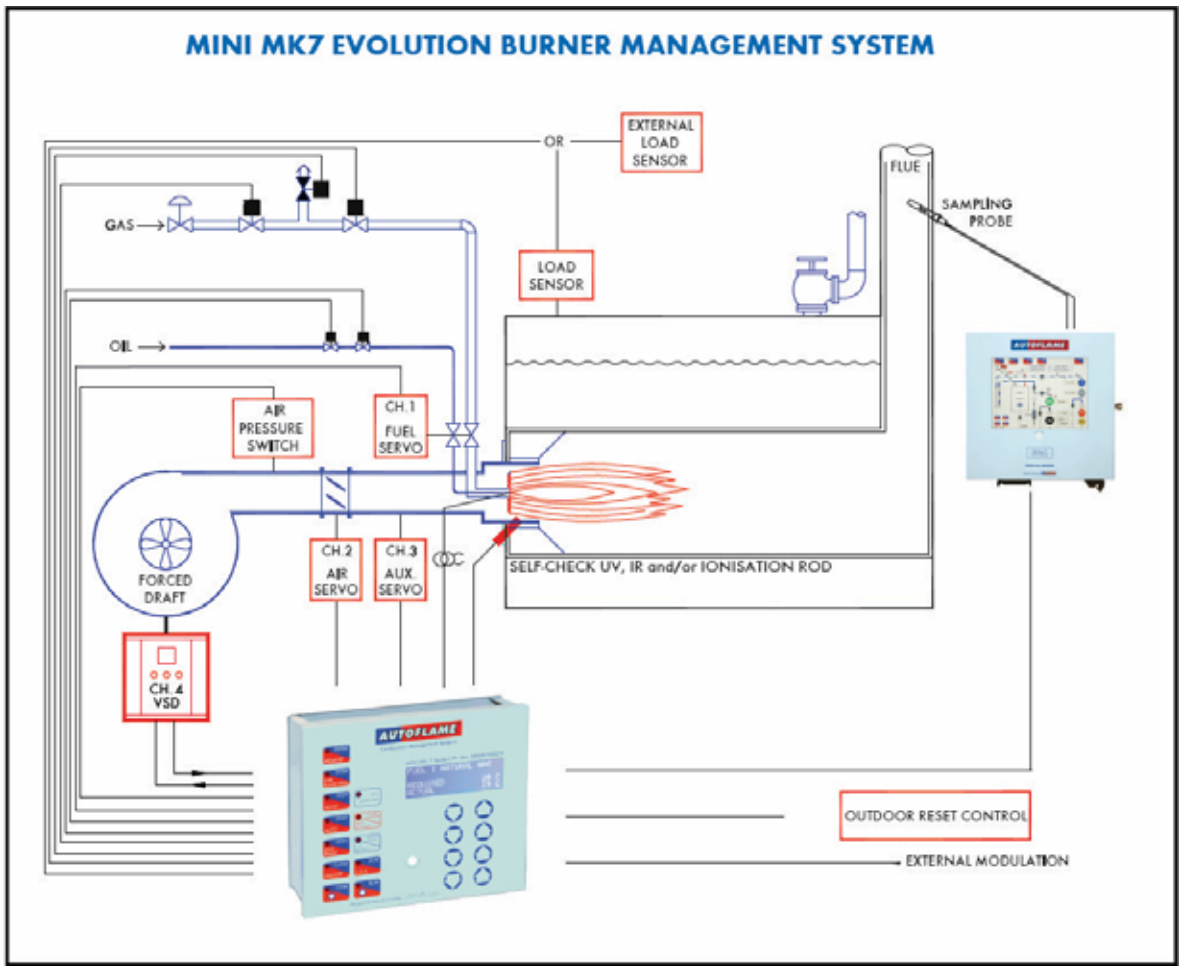

Figure *2.18.1.ii A potential installation of a Mini Mk7 Evo MM unit setup*

2.18.2 MINI MK7 EVO DIMENSIONS AND ILLUSTRATIONS

In this section, a description of the front facia, dimensions and wiring schematic of the Mini Mk7 Evo is presented.

2.18.2.1 Front Facia

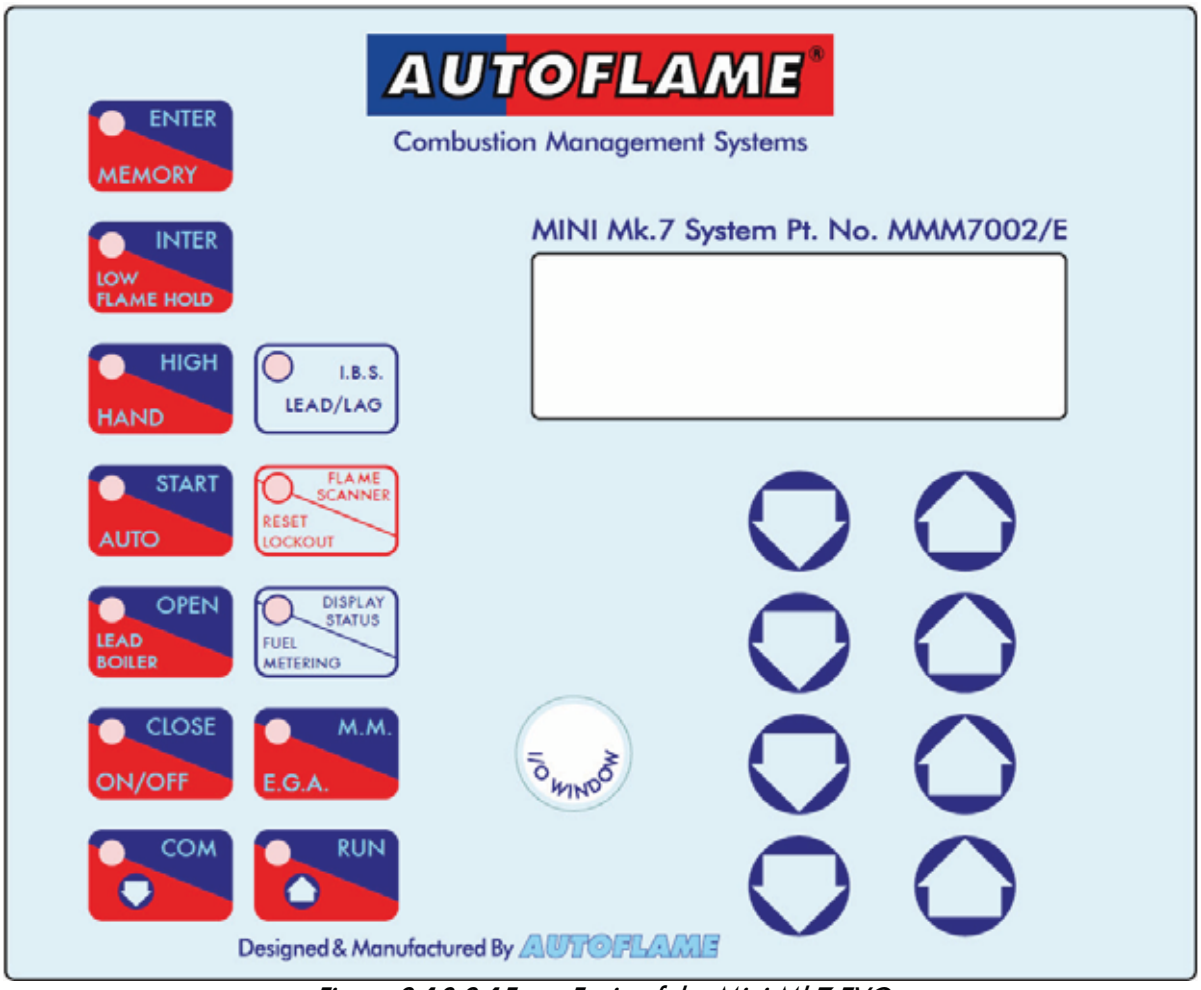

Figure 2.18.2.1Front Facia of the Mini Mk7 EVO

Viewed front end on, the Mini Mk7 EVO unit has twelve buttons situated on the left hand side and eight arrow buttons on the right hand side of the unit. These buttons are initially used by a trained combustion engineer to commission or setup the Mini Mk7 EVO, as well as providing an end user with the ability to monitor or display information about the combustion process the Mini Mk7 Evo is controlling.

The "I/O Window" located in the centre of the facia is used by the IR Upload/Download interface.

2.18.2.2 Enclosure Dimensions

MINI MK7
OUTSIDE DIMENSIONS &
CUT OUT DETAILS

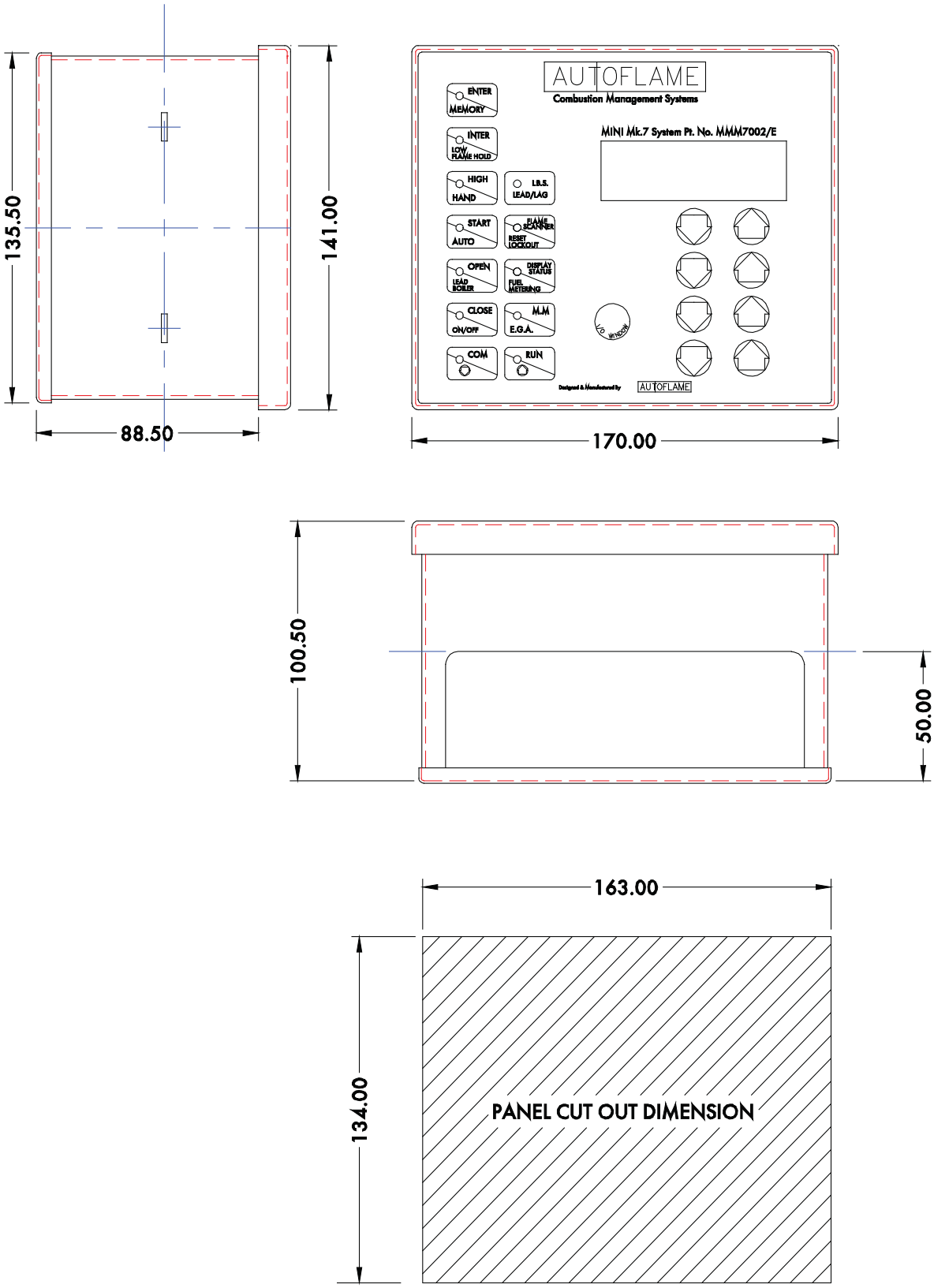

2.18.2.3 Wiring Schematic

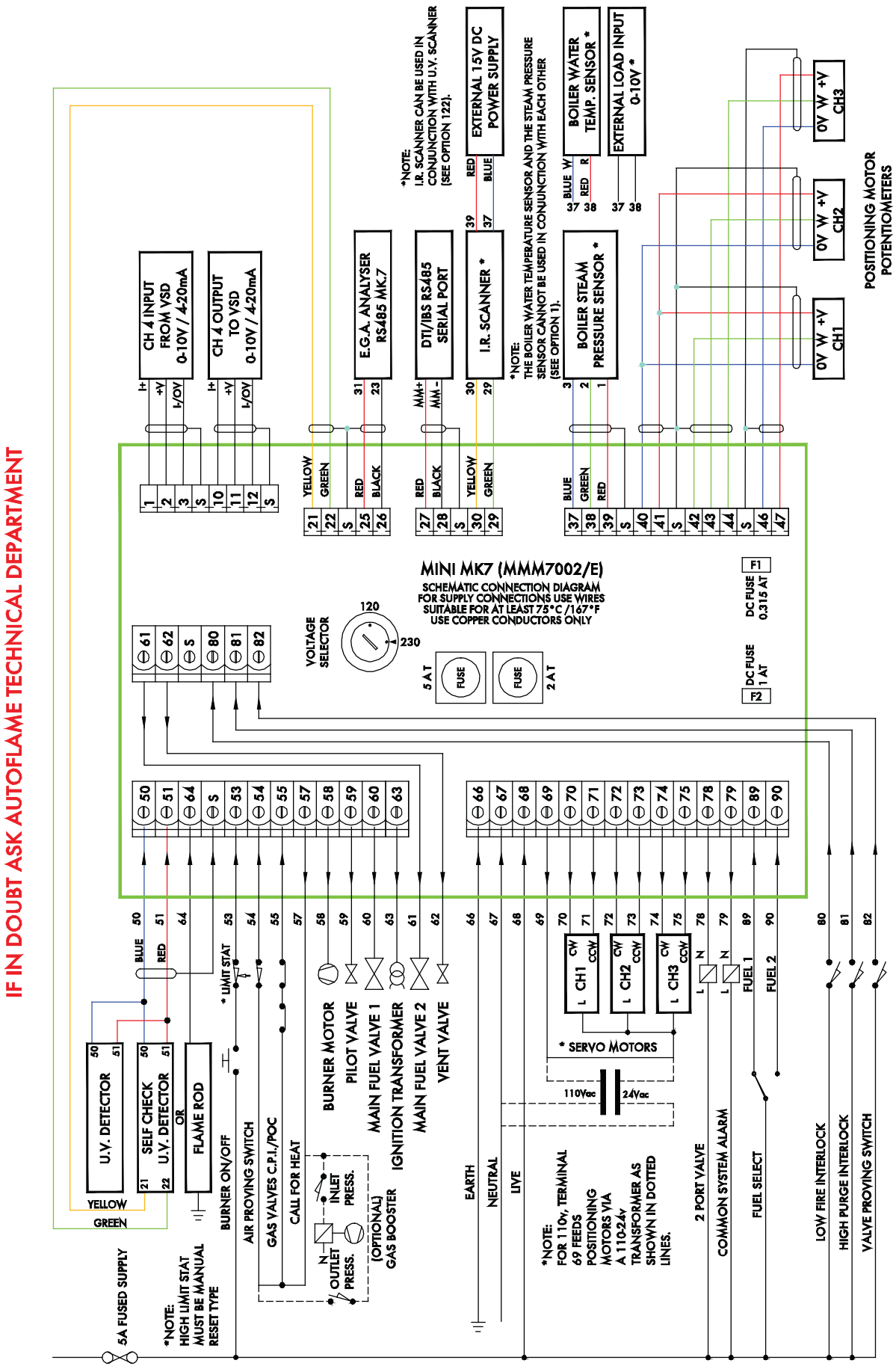

2.18.3 SETUP PROCEDURES

2.18.3.1 Introduction

The described commissioning and setup procedures must be strictly adhered to. If any doubt exists regarding the functionality or use of the Mini Mk7 EVO unit, please contact Autoflame.

The control philosophy of Autoflame Control Systems centres on i) the accurate definition of a range of fuel valve positions and a set of corresponding air damper positions; otherwise known as a combustion curve and ii) the accurate reproduction and monitoring of the predefined combustion curve. Initial care must be taken when defining and/or adjusting fuel and air positions so as not to create any unstable or hazardous combustion conditions, e.g. moving the fuel valve to the open position without increasing the air damper position. Improper use may result in property damage, serious physical injury or death.

Installation checks

In the following sections of this manual, guidance is given on

- the installation of the Mini Mk7 EVO unit
- the setup of the Mini Mk7 EVO itself through the adjustment of options and parameters
- other considerations and applications of the unit

It is assumed that prior to commissioning, all wiring is checked and tested. When the installation and all burner adjustments have been completed, the entire burner control system should be tested in accordance with the manufactures instructions. This should verify:

1. Each operating control (temperature, pressure, etc)
2. Each limit switches (temperature, pressure, low water cut-off, etc)
3. Each interlock switch (airflow switch, high & low fuel pressure/temperature switches, purge and low fire switches, fuel valve proof of closure interlock, etc).
4. Pilot flame failure responses and lockouts.
5. Main flame failure responses and lockouts.
6. Tight shut off of all valves.

Operational checks

1. Close manual main shut-off valve.
2. Recheck all limit circuit wiring for proper operation and correct connection.
3. Confirm that the automatic main fuel valves are wired correctly.
4. Power the control and electronically check the proper sequence or operation.
5. After assuring that all the interlocks and valves are properly wired and that the sequence of operation is correct, open the manual shut-off fuel valve and proceed cautiously through the boiler light off process. Check all safety interlocks for proper shutdown of the boiler.

Commissioning, setup and burner start-up must only be carried out by a trained Combustion Engineer.

2.18.3.2 Autoflame Servomotors

Autoflame supply three standard sizes of positioning motor: small, large and industrial. All can be used for positioning fuel and air dampers. Both types can be configured to drive clockwise or counter clockwise to open a valve or damper, an example of this and positioning motors layout is given in Section 2.18.3.2.2

Viewing the shaft end on, see Figure 2.18.3.2.1 from the potentiometer end, all positioning motors drive in a clockwise direction when power is applied between the "LIVE" and "CW" terminals, and counter clockwise if the power is applied between the "LIVE" and "CCW" terminal.

The operation of fuel valves and air dampers is often such that they open in a clockwise direction. If the operation needs to be reversed, it is necessary to swap various wiring connections between the MM and the positioning motor (s) as shown in the Figure 2.18.3.2.

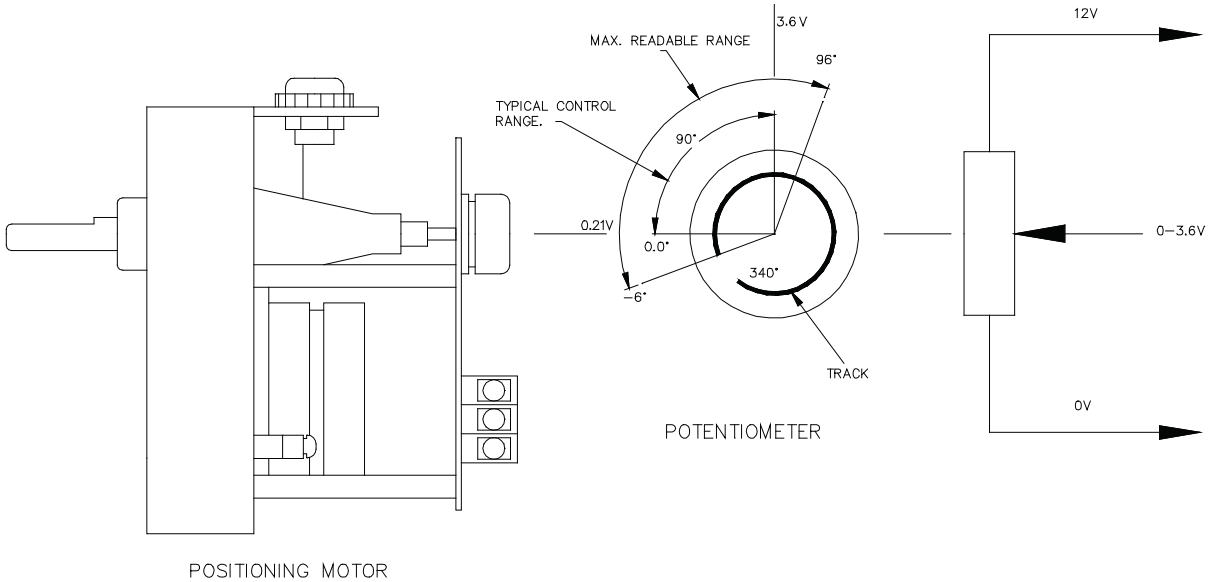

Figure 2.18.3.2.1Servomotor shaft and direction of rotation.

Before a burner is commissioned, it is essential to set up each of the Mini MK7 EVO servo positioning motors and potentiometers correctly.

All readings displayed on the MM are in angular degrees. Each servomotor is manufactured with the potentiometer and motor shaft positioned at 0.0 angular degrees. However, on the first use of a servomotor, it is essential that this position is confirmed and, if necessary, the potentiometer adjusted so that the MM reads 0.0 angular degrees when the relevant valve or damper is at its fully closed position. This requires the commissioning engineer to physically check the mechanical position of the valve or damper - **DO NOT ASSUME THEY HAVE BEEN PREVIOUSLY SET CORRECTLY**.

In order to adjust the potentiometer a tamper proof screwdriver is required; these can be ordered from Autoflame. Each servomotor controls a valve or air dampers position moving through 90 angular degrees. The MM units have the ability to drive the servomotor positions through 96 angular degrees. Please contact the Autoflame for advice on applications for ranges greater than 90 angular degrees.

2.18.3.2.1 Positioning Motors Direction Change

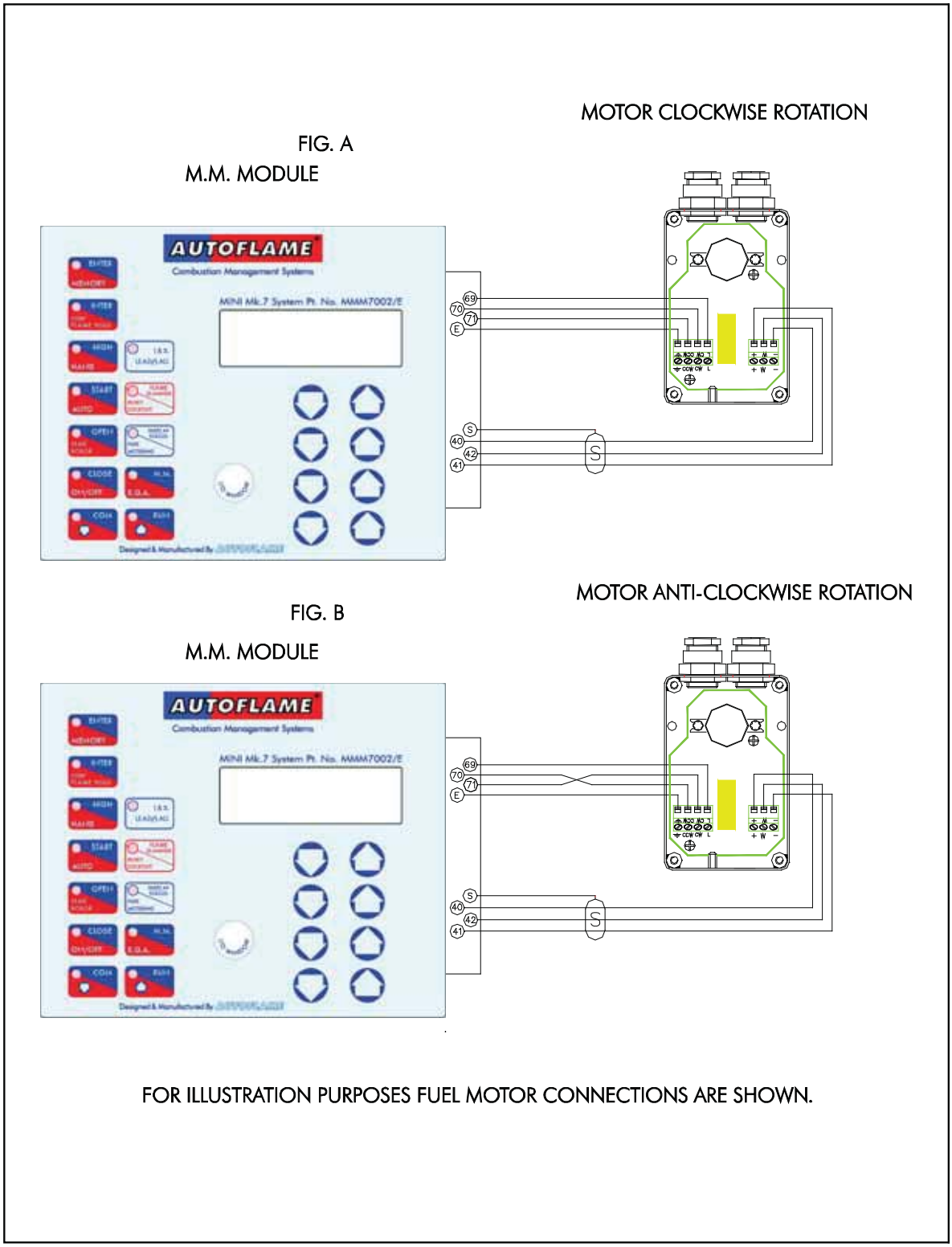

Figure 2.18.3.2.1ii Wiring connections between the Mini Mk7 EVO and servomotors for clockwise rotation (FIG. A) and anti-clockwise rotation (FIG. B).

All servomotors shown are 230V in which the low voltage cables and mains voltage cables must enter the servomotor through separate glands. For the 24V servomotors, only one gland is required or both the low voltage cables and mains voltage cables.

2.18.3.2.2 Servomotor Positioning Diagrams

Small Servomotor

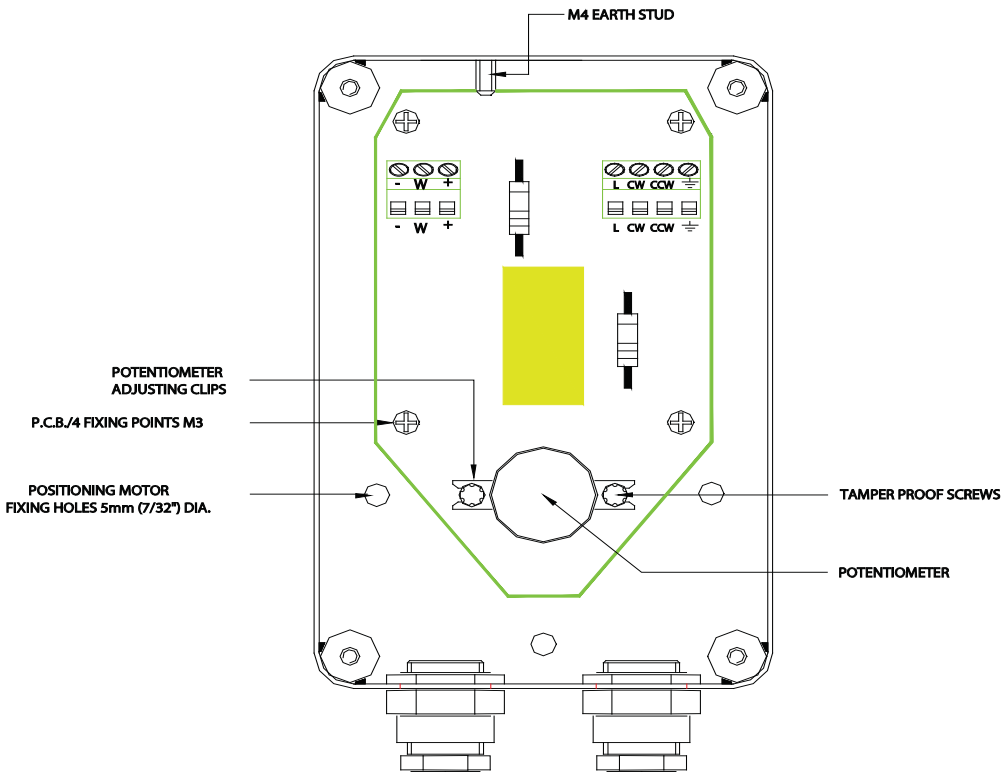

Large Servomotor

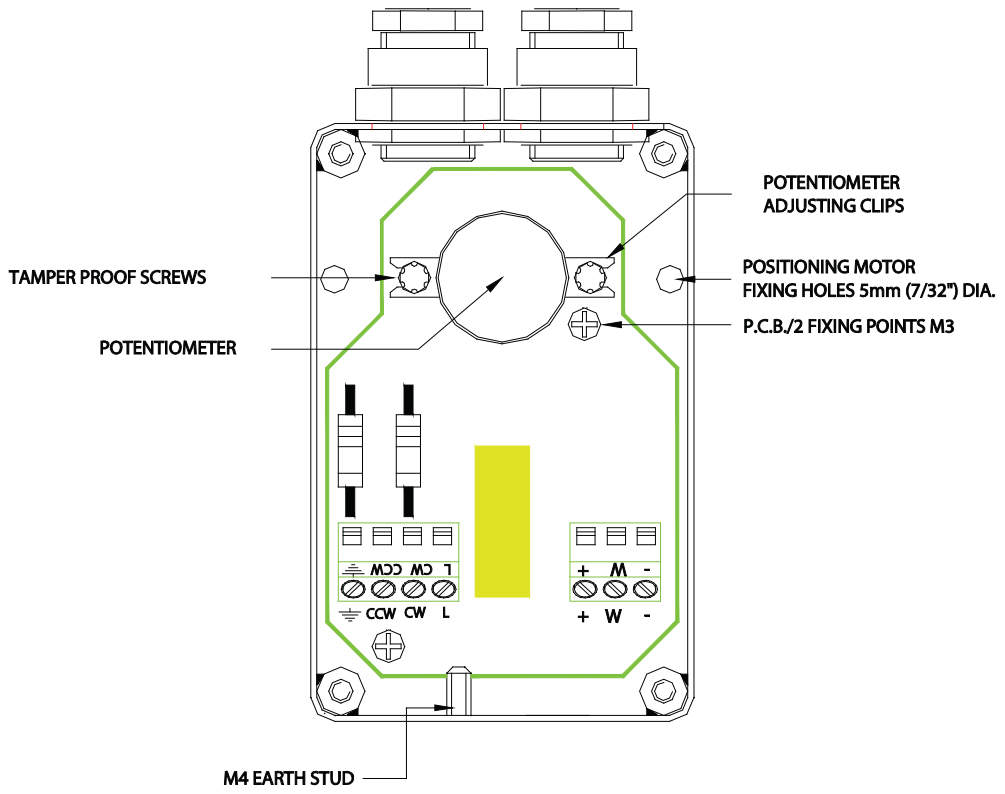

2.18.3.3 Servomotor Setup Procedure

To setup a positioning motor on Mini Mk7 EVO systems with an Autoflame EGA, first ensure Option 12 is set to 0 to prevent EGA errors from occurring. Enter the Mini Mk7 EVO commissioning mode by pressing the

button when the Mini Mk7 EVO unit is first powered on. Enter the commissioning password using the "UP" and "DOWN" arrow buttons. The first row of buttons corresponds to Channel 1, the second row of corresponds to Channel 2 etc. Once the password has been entered, the screen will display the measured positioned values of Channel 1, Channel 2 and Channel 3, depending on the number of servomotors enabled as set in Option 8.

In order to confirm the potentiometer is reading the correct motor position, drive the valve or damper down to the "CLOSED" position. To do this, wait until the burner motor is on and press the

button. Then, using the buttons, adjust the channel positions down while observing the position of the valve or damper. If the valve or damper position is fully closed but the indicated on screen angular degree value is not the potentiometer will need to be zeroed - also known as "zeroing the pots".

WARNING: Electrical connections are live/hot. Misapplication may result in serious physical injury or death.

To zero the potentiometers, remove the servomotor cover. Using a tamper proof screw, loosen the screws either side of the potentiometer and adjust the potentiometer until the displayed Channel position on the Mini Mk7 EVO screen indicates 0.0 angular degrees. Once correctly positioned, tighten the tamper proof screws either side of the potentiometer and replace the servo motor cover.

This process has to be conducted when power is being supplied to the servo motor in order for a feedback signal to be measured by the potentiometer. As such, only train engineers should attempt the procedure.

2.18.3.4 Issues to Consider When Using Autoflame Valves

On threaded valves, the pin on the top of the valve is 90.0 angular degrees opposite from the position of the butterfly valve.

On flanged valves, the pin on the top of the valve is in line with the position of the butterfly valve.

For both valves, the external visual position indicator is in line with the position of the butterfly valve.

Regardless of the type of valve being used, the servomotor is dispatched from the factory with the potentiometer in the zero position. The same servomotor will be correct for both types of valve, as the servomotor for the threaded valve is mounted at 90.0 angular degrees different from the flanged valve.

2.18.4 OPTIONS AND PARAMETERS

In addition to wiring and installation setup, the Mini Mk7 EVO requires a number of Options and Parameters to be specified. In total there are 1-150 Options and 1-150 Parameters (not all are in use) which govern how the Mini Mk7 EVO unit operates and controls the combustion process it has been tasked with. Each Option and Parameter controls a specific function, of special note are the Options and Parameters from 110 to 150. These are safety specific, being concerned with the operation of the ignition sequence; gas, air and oil pressure sensor readings; the Valve Proving Sequence (VPS) etc.

2.18.4.1 Options

To explain how to select and modify Options mode, the Channels1, 2 and 3 will refer to descending rows of buttons respectively; Channel 1 referring to the top row, Channel 2 to the second row, etc. In order to enter Option mode, the Mini Mk7 EVO unit must be in Commission mode. To enter Commission mode, the Mini Mk7 EVO must be restarted and the COM button pressed when its LED flashed. The password screen is then displayed, with the number of times the selected fuel was commissioned,

```
PASSWORD                 0
PASSWORD                 0
F1 COMMISSIONED         23
```

Using the Channel 1 and Channel 2 buttons to set the password code, then press CLOSE ON/OFF the button. The number of servo motor channels (default to two: Channel 1 and Channel 2) will then be displayed. Press the Channel 1 buttons simultaneously in order to enter Option mode, the following screen will then be displayed,

```
OPTION NO          1=  3
BOILER SENSOR TYPE
TEMPERATURE SENSOR
0-400 C,        32-730 F
```

For each option, the rows 2, 3 and 4 will display the textural description of the option number and value.

To change the Option number, adjust the channel 2 buttons.

To change the value of the Option number selected, adjust the buttons on the third row (Channel 3). Any number of Option valves can be changed when in the Option mode, a user does not have to leave the Option screen per Option change made. When all Options changes and/or modifications have been made, press the CLOSE ON/OFF button.

All new Options are then stored in the Mini Mk7 EVO memory and the unit will restart.

Option No.	Factory Setting	Option Value	Description
1	**3**		**Boiler Temperature/Pressure Sensor Type**
		3	Temperature Sensor (MM1006 & 7) 20-390 C (50 - 730 F)
		6	Medium Pressure Sensor (MM10008) 2.0 - 23.0 Bar (30 - 330 PSI)
		7	High Pressure Sensor (MM10009) 2.0 - 38.0 Bar (30 - 550 PSI)
		8	Low Pressure Sensor (MM20020) 0.2 - 3.80 Bar (1.5 - 55 PSI)
		10	External temperature sensor (Voltage input) - Range set by parameters 52 - 56
		11	External pressure sensor (Voltage input) - Range set by parameters 52 - 56
2	**60**		**Motor Travel Speed During Modulation:** The Value is not specific to a time/distance ratio. If the speed of the motor is too fast, then increase this value. If too slow, decrease the value. At times other than modulation, the motors move at full speed or at the value set in option 75. Movement is limited by the slowest channel, i.e. The slowest moving motor.
		5 - 240	Adjustment Range: 5 = 43 seconds from 0 degrees to 90 degrees 60 = 120 seconds from 0 degrees to 90 degrees 240 = 210 seconds from 0 degrees to 90 degrees
3	**0**		**Unused.**
4	**0**		**Unused.**
5	**1**		**Purge Position:** This selects the purge position. (Applicable to channels 1-4 when selected; see options 67 - 70). VSD channels 5 & 6, if optioned, purge at open position regardless of this option setting. It also applies to post purge if option 118 is set to a value greater than 0.
		0	Selected channels purge at HIGH position (high fire position)
		1	Selected channels purge at OPEN position (full span of servomotor as entered during commissioning)
6	**10**		**Proportional Control (P):** This option sets the proportional band. This is an offset below the setpoint. When the actual value reaches this point the burner will begin to modulate as it approaches the setpoint. *Example of proportional band offset: Required setpoint = 100 C, Proportional offset = 10 (i.e. option 6 set to value 10).*

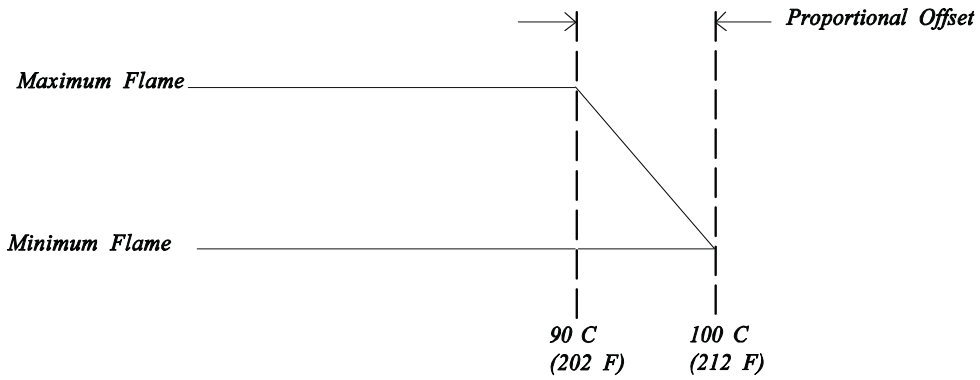

			Proportional band: Value entered - Centigrade, Fahrenheit, Bar or PSI dependent on the type of control sensor used and display units selected - Options 1 and 65.
		5 - 2000	If Centigrade, Fahrenheit or PSI units effective.
		0.5 - 200.0	If Bar units effective.
			Note: *Decreasing this value could lead to overshooting of the required setpoint. Increasing this value may cause the burner to modulate too early, taking a longer time to reach the required setpoint.*

Option No.	Factory Setting	Option Value	Description
7	**60**		**Integral Control Time (I):** Every 'n' seconds, 10% of the present offset from setpoint value is added (below setpoint) or subtracted (above setpoint) to the present proportional value. The value of 'n' is the number of seconds set in this option. It is possible to set this option to 'off'. If 'off' is selected, there will be no integral control. Parameter 106 enables a percentage variation.
		0	Off
		1 - 250	Seconds
8	**1**		**Number of servomotor channels to be enabled:** Channel "1" is always enabled (Fuel Position Motor). Set option 8 to the number of additional channels required (minimum of 1).
		1	Channels 1&2 in use.
		2	Channels 1, 2 & 3 in use.
			Note: *If option 8 is changed after commissioning then the MM Unit will need to be re-commissioned unless this option is returned to its previous value.*
9	**1**		**Internal Stat Operation:** The 'internal stat' serves the purpose of turning the burner on and off according to the actual value relative to the required setpoint. There are three settings for this option. The first keeps the 'internal stat' closed all the time. In this instance, a 'working stat' must be fitted to the boiler. The second setting opens the 'internal stat' at an offset above the required setpoint and closes it at an offset below the required setpoint. The third setting opens the 'internal stat' at an offset above the required setpoint and closes it at an offset also above the required setpoint. The following diagrams illustrate this operation. The offset values are set in options 10 and 11.
		0	Internal stat always closed.
		1	Burner starts below required setpoint.
		2	Burner starts above required setpoint.
			Option 9 = 1, e.g. using 100 C (212 F). Required setpoint.
			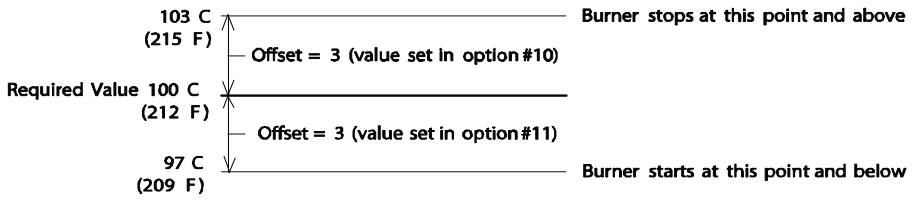
			Option 9 = 2, example using 100 C (212 F). Required setpoint.
			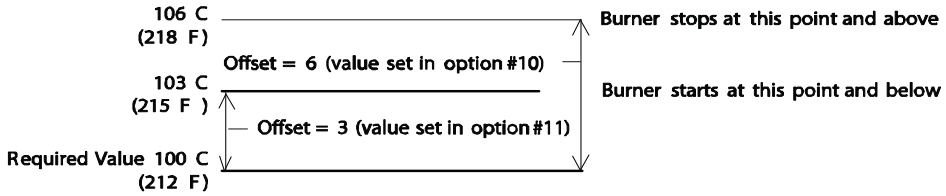
10	**3**		**Offset above required setpoint at which the burner is stopped:** Only relevant if option 9 is set to 1 or 2.
		2 - 1000	If Centigrade, Fahrenheit or PSI units effective
		0.2 - 100.0	If Bar units effective

Option No.	Factory Setting	Option Value	Description
11	**3**		**Offset below/above required setpoint at which the burner is started:** Only relevant if option 9 is set to 1 or 2.
		2 - 1000	If Centigrade, Fahrenheit or PSI units effective
		0.2 - 100.0	If Bar units effective
12	**0**		**EGA Options:** If this option has a setting of 1 - 9, then the EGA will trim and the burner must be commissioned with the EGA operational. The trim is applied to channel 2 or 5, dependent on the setting of option 76.
		0	EGA not optioned
		1	If an EGA error occurs, then the burner will continue to fire. The servomotors will return to the original commissioned fuel/air ratio and the trim function will not be operational until the EGA error is reset. No combustion/single point changes can be made whilst the EGA is in an error condition. Terminal 79 is not energised in the event of an EGA error.
		2	If an EGA error occurs, then the burner will stop firing. The burner will not start until the EGA error has been cleared and the EGA is inside its operating temperature range. Terminal 79 is not energised in the event of an EGA error.
		5	Same as 1, plus the combustion limits are also tested (options 19 - 27)
		6	Same as 2, plus the combustion limits are also tested (options 19 - 27)
		7	System commissioned on MM Only - EGA used only for monitoring and display purposes.
13	**0**	0 - 30	**Reset options to original factory settings:** To reset all of the options back to their original factory set values, set option 13 to 26 and press enter.
14	**0**		**Unused.**
15	**3**		**Burner On/Off and Setpoint Manipulation via Facia Buttons:**
		0	Burner On/Off manipulation disabled, setpoint manipulation disabled.
		1	Burner On/Off manipulation disabled, setpoint manipulation enabled.
		2	Burner On/Off manipulation enabled, setpoint manipulation disabled.
		3	Burner On/Off manipulation enabled, setpoint manipulation enabled.
16	**0**		**Lead/Lag (IBS) and DTI:** If Option 16 is set to values 1 or 3, then this M.M. will respond to sequencing commands (see section on Sequencing). A lead boiler can be selected by pressing the LEAD BOILER pushbutton on the front facia of the appropriate M.M. when in the 'IBS' screen. Only 1 M.M. may be selected as lead boiler at a time or the sequencing will not operate. The lead boiler can also be selected via the D.T.I., but the 'LEAD BOILER' push button overrides the DTI lead boiler selection.
		0	No sequencing - MM units still communicate and can be seen on the DTI.
		1	Sequencing enabled.
		2	Setpoint & enable/disable commands accepted from DTI.
		3	Both 1 and 2.
			Note: *Accurate fuel flow metering must be entered for sequencing to operate. An RS485 data cable (Belden 9501) must be connected between each MM unit (see section 2.18.16.4 for correct connection).*
17	**0**		**NO & CO Displayed when running on oil:** If fuel 2 is selected, then the displaying of CO & NO can be on or off. This option is only relevant if an EGA is operational on the system.
		0	NO & CO display blanked - Not displayed.
		1	NO & CO is displayed normally.

Option No.	Factory Setting	Option Value	Description
18	**1**		**Carry Forward of Trim:** When the system modulates, the correction that may be existing on the air damper position can be carried forward. This option is only relevant if an EGA is operation on the system.
		0	No carry forward of trim.
		1	Trim carried forward.
19	**0**		**Upper Offset Limit % O_2:** EGA Limits: Options 19 - 27 are only relevant if an EGA is operational on the system. Option 12 must be set to 5,6, 8, 9 or 10 if any of the following limit checks are to be invoked. This is an offset from the commissioned values.
		0 - 10.0	% O_2
20	**0**		**Upper Offset Limit % CO_2:**
		0 - 10.0	% CO_2
21	**0**		**Upper Offset Limit ppm CO:**
		0 - 200	ppm CO
22	**0**		**Lower Offset Limit % O_2:**
		0 - 10.0	% O_2
23	**0**		**Lower Offset Limit % CO_2:**
		0 - 10.0	% CO_2
24	**0**		**Unused.**
25	**0**		**Absolute Value % O_2:** System checks for O_2 values lower than the value specified in this option regardless of the commissioned values.
		0 - 20.0	% O_2
26	**0**		**Absolute Value % CO_2:** System checks for CO_2 values higher than the value specified in this option regardless of the commissioned values.
		0 - 20.0	% CO_2
27	**0**		**Absolute Value ppm CO:** System checks for CO readings higher than value specified in this option regardless of the commissioned values.
		0 - 200	ppm CO

Option No.	Factory Setting	Option Value	Description
28	**20**		**Trim Threshold:** This option is only relevant if an EGA is operational on the system. The value set in this option is subtracted from the required setpoint. If the actual value is below the offset, then the EGA will not operate. If the trim is to be effective at all times, then set the value to zero. This option must also be set to zero for the EGA to operate when external modulation is optioned.
		0 - 50	If Centigrade, Fahrenheit or PSI units effective.
		0 - 5.0	If Bar units effective.
			Note: *No single point changes can be made if the actual value is below the offset value.*
29	**1**		**Golden Start:** See section 2.18.4. Parameter 15 - sets the time the golden start is maintained after ignition.
		0	Golden Start operates.
		1	Golden Start does not operate.
30	**50**		**DTI Required Setpoint Minimum Limit:** If the system is being used with a DTI a maximum and minimum limit for the required setpoint must be set. If a value is received from the DTI that is outside these limits, it will be ignored and the system uses its previous required setpoint. Practical range is limited to range of sensor selected.
		5 - 9990	If Centigrade, Fahrenheit or PSI units effective.
		0.5 - 999.0	If Bar units effective.
31	**100**		**DTI Required Setpoint Maximum Limit:**
		5 - 9990	If Centigrade, Fahrenheit or PSI units effective.
		0.5 - 999.0	If Bar units effective.
32	**20**		**Trim Delay:** After ignition, the EGA does not sample for the period of time set in this option (only relevant if EGA is operational on system). This allows for the combustion to stabilise before sampling commences. The timing starts at the ignition point.
		0 - 250	Period (seconds) after ignition no sampling takes place.
33	**1**		**MM Identification:** The identification number must be set on all MM Units in the boiler house. If not, then problems will occur with sequencing/twin burner and with the DTI communications. Each unit must have a different identification number.
		1 -10	Identification number
34	**5**		**Rating of Burner:**
		1 - 999	See option 77 for units.
35	**10**		**Sequence Scan Time:** This is the time period between sequencing requests from the lead MM. On the sequence scan time, the lead MM will demand lag burners to be brought online or offline, depending on load requirements. See parameters 86 and 87 for thresholds.
		1 - 100	Sequence scan time (minutes).
			Note: *Accurate fuel flow metering must be entered for sequencing to operate. An RS485 data cable (Belden 9501) must be connected between each MM unit (see section 2.18.16.4 for correct connection).*

Option No.	Factory Setting	Option Value	Description
36	**0**		**EGA Sensor Selection:** Available when using an EGA System fitted with NO and SO2 sensors. The following option is for selecting the type of sensors used.
		0	Neither
		1	NO only
		2	SO2 only
		3	NO and SO2
37	**0**		**Derivative Control Time Interval (D):** The time interval between the controller comparing the actual value and the required setpoint value. To enable derivative control this option must be set greater than 10.
		0	Off.
		1- 200	Seconds.
38	**2**		**Derivative control (D) deadband:** The deadband is the margin above and below the required setpoint in which no derivative control occurs.
		0 - 15	If Centigrade, Fahrenheit or PSI units effective.
		0 - 1.5	If Bar units effective.
39	**10**		**Derivative control (D) response sensitivity:**
			The sensitivity value indicates the amount of percentage firing rate increase or decrease that is inflicted by the derivative action e.g. if the chosen value was 10% then 10% firing rate would be added to the existing rate of fire i.e. if the burner was firing at 50% load and the derivative action was triggered the firing rate would increase by 10+50 to 60%.
			The following is an example of the above control philosophy in action:
			Note: *"Control Time Interval" Set to 20 seconds* *"Deadband" Set to 2 C (2 F)* *"Response Sensitivity" Set to 10%*
			Setpoint Information:
			"Required Setpoint" Set to 90 C (190 F) *"Actual Value" Reads 86 C (186 F)*
			Firing Rate Information:
			Burner firing at 50% of capacity
			In the example situation there has been 4 C (4 F) drop in temperature below the required setpoint. The deadband is set at 2 C (2 F), therefore the derivative action will be triggered as the deviation from the required setpoint is in excess of 2 C (2 F). In this example, 10% will be added to the 50% firing rate resulting in an increase in firing rate to 60% of capacity. *The "Control Time Interval" is set for 20 seconds and if after this time interval the actual value is not within the 2 C (2 F) deviation from the required deadband, another 10% would be added to the 60% firing rate which would result in a 70% firing rate.* *By careful selection of "Control Time Interval", "Deadband" and "Response Sensitivity" an ideal response to rate of change over time can be configured. The control philosophy detailed operates inversely if the "Actual" temperature exceeds the required setpoint and is outside the "Deadband".*
		1 - 100	% Sensitivity

Option No.	Factory Setting	Option Value	Description
41	**0**		**2/3 State Sequencing:** This option sets 2 states of operation for the lag boilers. Either one boiler is kept in a standby warming state and the other boilers are off, or all lag boilers are kept in a standby warming state and there are no off boilers.
		0	3 State Sequencing: LEAD, STANDBY, OFF, OFF, OFF, OFF...
		1	2 State Sequencing: LEAD, STANDBY, STANDBY, STANDBY...
42	**20**		**Warming facility for medium/high pressure steam sequencing - phantom setpoint:** For lead/lag (sequencing) applications where check (non-return) valves are installed, it is possible to use a phantom setpoint to keep the boilers in a standby warming condition. This value is an offset below the normal required setpoint. When the phantom setpoint is in effect, the burner is held at a low flame position.
		0 - 100	If Centigrade, Fahrenheit or PSI units effective.
		0 - 10.0	If Bar units effective.
43	**5**		**Offset above phantom setpoint when the burner stops:**
		2 - 50	If Centigrade, Fahrenheit or PSI units effective.
		0.2 - 5.0	If Bar units effective.
44	**5**		**Offset below phantom setpoint when the burner starts up:**
		2 - 50	If Centigrade, Fahrenheit or PSI units effective.
		0.2 - 5.0	If Bar units effective.
45	**0**		**External Modulation:** When enabled, the internal PID control is disabled and the firing rate is set by an external controller applied to the appropriate input terminals 7, 8 and 9. This input control signal can be 0 - 10V, 2 - 10V, 4 - 20mA or 0 - 20mA representing low to high fire. A high limit stat must be fitted. A working stat may be required depending on the setting of this option.
		0	Disabled.
		1	Enabled - No working stat facility (internal stat always closed - option 9), no local display of pressure/ temperature. Required setpoints not displayed. An external working stat is required.
			Note: *The fuel flow metering must be entered (option 57). If this is not entered then the MM will remain in the low flame hold state. Option 55 must be set to 0 if option 45 is set to 1, 2 or 3.*
46	**0**		**Unused.**
47	**0**		**Cold Start Routine:** On burner start-up, if the actual value is below 30% of the required setpoint, then the burner will be held at the low flame hold position for the number of minutes set in this option. If the boiler is at or below 60% of its required setpoint, then the burner firing rate would be held at 50% firing for no longer than the number of minutes set in this option. When the actual value exceeds the P band offset on the PID philosophy, the burner reverts back to normal PID control. If the burner turns off then the timer is reset.
		0	Disabled
		1	Enabled
			Note: *The cold start routine cannot be used with IBS and/or external modulation (options 45 and 55)*

Option No.	Factory Setting	Option Value	Description
48	**0**		**Flue Gas Recirculation - Timer:** This is the time that the MM channels (positioning motors/ variable speed drives) are held at the FGR start positions, after which modulation then takes place. This timer starts at the end of main flame proving. Also see parameter 90 regarding the commissioning of the FGR positions.
		0	Disabled.
		1 - 600	Seconds.
49	**0**		**Flue Gas Recirculation - Offset:** This is an offset from the required setpoint. The MM channels (positioning motors/variable speed drives) are held at the FGR start positions until the actual value reaches the offset value below the required setpoint.
		0 - 50	If Centigrade, Fahrenheit or PSI units effective.
		0 - 5.0	If Bar units effective.
50	**0**		**Flue Gas Recirculation - Flue Gas Temperature:** The MM channels (positioning motors/ variable speed drives) are held at the FGR start positions until the flue gas temperature has reached 120 C or 248 F. (An EGA Must be present and optioned).
		0	Not optioned.
		1	Optioned.
51	**0**		**Units of Temperature:**
		0	Displayed in Centigrade
		1	Displayed in Fahrenheit
52	**0**		**Units of Pressure:**
		0	Displayed in Bar
		1	Displayed in PSI
53	**0**		**Steam Boiler Sequencing Burner 'off' time:** The steam boiler type sequencing is enabled by setting option 1 to a respective pressure sensor. Options 42, 43 and 44 are relevant to the "standby" boiler operation.
		0 - 200	Burner "Off" time (minutes) during warm up cycle. Intelligent Boiler Sequencing - Steam boiler applications.
54	**5**		**Steam Boiler Sequencing Burner 'on' time:**
		1 - 30	Burner "On" time (minutes) during warm up cycle. Intelligent Boiler Sequencing - Steam boiler applications.
55	**0**		**Unused.**
56	**1**		**Operation of alarm output for all systems errors/lockouts and EGA errors on terminal 79:**
		1	Relay normally off, on when alarm.
		2	Relay normally on, off when alarm.
			Note: *This is a switched neutral and not an output terminal*

Option No.	Factory Setting	Option Value	Description
57	**0**		**Fuel Flow Metering:** Fuel flow metering is required for several functions to work correctly. Autoflame recommend entering dummy points if a fuel meter is not available to measure actual flow. Setting this to 1 will initiate fuel flow metering once the burner is firing. See Section 2.18.8.6.
		0	No flow metering.
		1	Flow metering operates and recalibrated.
		2	Totalised flow metering reset to zero for selected fuel.
58	**0**		**Unused.**
59	**0**		**Unused.**
60	**0**		**Hand/Auto Bumpless Transfer Operation:**
		0	When changing from Auto to Hand - Servos go to the last known hand position. When changing from Hand to Auto - Servos stay in the current hand position.
		1	When changing from Auto to Hand - Servos stay in the current Auto position. When changing from Hand to Auto - Servos stay in the current hand position.
		2	As 0, but hand position is not stored in permanent memory. (E.g.. After a powerdown)
			Note: *Low Flame Hold is not a hand position. When changing from LFH to Auto - Servos will go to the last known Auto position.*
61	**1**		**Flow Metering Units: Fuel 1- Gaseous:**
		0	Cubic feet.
		1	Cubic meters.
62	**3**		**Flow Metering Units: Fuel 2 - Liquid:**
		1	Lbs.
		2	Kilograms.
		3	Litres.
		4	US Gallons.
63	**0**		**Unused.**
64	**0**		**Unused.**
65	**0**		**Unused.**
66	**0**		**Unused.**
67	**1**		**Channel 1 Purge Position:** The following options tell the MM which channels are to be included in the purge sequence. See option 5 for purge position.
		0	Channel 1 to purge position.
		1	Channel 1 to remain closed for purge.
68	**0**		**Channel 2 Purge Position:**
		0	Channel 2 to purge position.
		1	Channel 2 to remain closed for purge.

Option No.	Factory Setting	Option Value	Description
69	**0**		**Channel 3 Purge Position:**
		0	Channel 3 to purge position.
		1	Channel 3 to remain closed for purge.
70	**0**		**Unused.**
71	**0**		**Fuel 1 - Fuel Type:**
		0	Natural Gas.
72	**1**		**Fuel 2 - Fuel Type:**
		1	Light distillate oil.
		2	Heavy fuel oil.
73	**0**		**Unused.**
74	**0**		**Unused.**
75	**0**		**Purge Motor Travel Speed:** During a purge sequence, the motor travel speed can be set independent of option 2. This effects all selected channels.
		0 - 100	0 = Quickest time. 100 = Slowest time.
76	**0**		**Unused.**
77	**0**		**Burner rating units:** Display purposes only for fuel flow metering.
		0	KW x 100 /hr
		1	Kg x 100 /hr
		2	MW /hr
		3	Btu x 100 /hr
		4	Hp x 100 /hr
		5	lbs x 100 /hr
		6	Btu x 1000 /hr
		7	Hp x 10 /hr
		8	lbs x 1000 /hr
		9	Btu x 1000 000 /hr
78	**0**		**Unused.**
79	**0**		**Lowest required setpoint:** Minimum required setpoint allowed when OTC is optioned. See Option 80 and Parameter 88. Point 3 - see diagram in Section 2.18.5.4.
		0 - 995	If Centigrade, Fahrenheit or PSI units effective.
		0 - 99.5	If Bar units effective.
80	**0**		**Outside temperature compensation:**
		0	Disabled.
		1	Enabled.
			Note: *A line voltage on Terminal 80 invokes a 'Night Setback' offset value, see Option 85.*

Option No.	Factory Setting	Option Value	Description
81	**140**		**Maximum boiler required setpoint at minimum outside temperature:** Point 1- See diagram in Section 2.18.5.4.
		50 - 999	If Centigrade, Fahrenheit or PSI units effective.
		5.0 - 99.9	If Bar units effective.
			Note: *Range is limited in accordance with the sensor selected in Option 1.*
82	**-30**		**Minimum outside temperature:** Point 4 - See diagram in Section 2.18.5.4
		- 40 +40	If Centigrade units effective.
		-40 +105	If Fahrenheit units effective.
83	**65**		**Minimum boiler required setpoint at maximum outside temperature:** Point 3 - Section 2.18.5.4
		50 - 999	Value limited in accordance with sensor selected by Option 1.
84	**30**		**Maximum outside temperature:** Point 4 - see Section 2.18.5.4
		-20 +40	If Centigrade units effective.
		-40 +105	If Fahrenheit units effective.
85	**10**		**Night setback 'depression' offset value:** This offset is subtracted from the normal required setpoint and activated by a line voltage on Terminal 80 during firing.
		0 - 100	If Centigrade, Fahrenheit or PSI units effective.
		0 - 10.0	If Bar units effective.
86	**0**		**Channel 1 softened error checking select:** Increases the positioning error from 0.1° to 0.5° for an industrial servomotor.
		0	CH1 normal positioning motor.
		1	CH1 industrial positioning/softened error checking.
87	**0**		**Channel 2 softened error checking select:**
		0	CH2 normal positioning motor.
		1	CH2 industrial positioning/softened error checking.
88	**0**		**Channel 3 softened error checking select:**
		0	CH3 normal positioning motor.
		1	CH3 industrial positioning/softened error checking.
89	**0**		**Unused.**
90	**0**		**VSD operation channel 4:**
		0	Not optioned.
		1	Optioned.
91	**0**		**Output from MM to VSD channel 4:**
		0	Output units displayed as 4 - 20 mA
		1	Output units displayed as 0 - 10 V
		2	Output units displayed as Hz

Option No.	Factory Setting	Option Value	Description
92	**25**		**Output low speed from MM to VSD channel 4:** This should match the VSD low speed.
		1 - 200	Hertz.
93	**50**		**Output high speed from MM to VSD channel 4:** This should match the VSD high speed.
		1 - 200	Hertz
94	**0**		**Input signal to MM from VSD channel 4:**
		0	Output units displayed as 4 - 20 mA.
		1	Output units displayed as 0 - 10 V.
		2	Output units displayed as 0 - 20 mA.
95	**0**		**Input units displayed, VSD channel 4:**
		0	Selected input signal.
		1	Hertz.
96	**0**		**Input low speed to MM from VSD channel 4:** This should match the VSD low speed.
		0 - 200	Hertz.
97	**50**		**Input high speed to MM from VSD channel 4:** This should match the VSD high speed.
		0 - 200	Hertz.
98	**0**		**Unused.**
99	**0**		**Unused.**
100	**0**		**Unused.**
101	**0**		**Unused.**
102	**0**		**Unused.**
103	**0**		**Unused.**
104	**0**		**Unused.**
105	**0**		**Unused.**
106	**0**		**Unused.**
107	**0**		**Unused.**
108			**Unused.**
109			**Unused.**

Option No.	Factory Setting	Option Value	Description
			For safety reasons, Options, 110 - 150 also have to be entered in as Parameters. It is the responsibility of the commissioning engineer to ensure that all settings are set in accordance with the appropriate standards, local codes and practices e.t.c.. **If the MM system is stuck in the 'idle' condition, it is likely that options 110 - 150 are not identical to Parameters 110 - 150. If the commissioning mode is entered the relevant Options/Parameters not set correctly will be displayed on the commissioning mode screen.**

Option No.	Factory Setting	Option Value	Description
110	**1**		**Burner flame scanner type:**
		1	Standard scanner. Internal non-permanent operation.
		2	Self check scanner. Internal permanent operation.
111	**0**		**Pilot:**
		0	Interrupted pilot. (Pilot shuts off after main flame is established).
		1	Intermittent pilot (expanding flame). (Pilot always on).
		2	Interrupted pilot. (single valve).
		3	Intermittant pilot (single valve).
112	**40**		**Pre purge time:**
		5 - 300	Seconds/minutes - see Option 135.
113	**3**		**Pre ignition time:** Time ignition transformer is on before pilot gas valve opens.
		3 - 5	Seconds.
114	**3**		**First safety time:** Time pilot valve is open before UV is checked.
		3 - 10	Seconds.
115	**3**		**Pilot prove time - pilot trial for ignition (PTFI):**
		3 - 5	Seconds.
116	**3**		**Fuel 1 second safety time - main trial for ignition (MTFI):** Pilot/Main valve overlap. (Not Applicable to expanding flame - see Option 111).
		3 - 10	Seconds.
117	**5**		**Main flame proving time:** Time period from main valves open to burner modulating - delay to modulation.
		5 - 20	Seconds.
118	**0**		**Post purge time:**
		0	No post purge.
		1 - 100	Seconds/Minutes.
			Note: *U.V. Not checked during post purge. See also Option 135.*
119	**10**		**Control box recycle time:** Time delay from burner shut down to startup.
		3 - 120	Seconds.
120	**10**		**UV Threshold:**
		5 - 50	Minimum flame signal strength during pilot. (All other times UV Threshold is fixed at 5)

Option No.	Factory Setting	Option Value	Description
121	**5**		**Delay from start of pre purge after which air switch checked:**
		5 - 10	Seconds.
122	**0**		**Flame switch operation:** If this operation is enabled Terminals 85/86 are used in conjunction with a flame switch to monitor the presence of a flame.
		0	Normal UV Scanner operation.
		1	Normal UV Scanner operation.
		2	Ionisation. (Please contact Autoflame before use)
		4	IR.
		5	IR and UV
		6	IR and Ionisation. (Please contact Autoflame before use)
123	**3**		**Fuel 2 second safety time - main trial for ignition (MTFI):** Pilot/main flame overlap. (Not applicable to expanding flame - see Option 111).
		3 - 15	Seconds.
124	**0**		**Limit Switches**
		0	Switches not checked.
		1	The high purge position is checked only.
		2	The low flame position is checked only.
		3	Both the high purge and low flame positions are checked.
			For options 1-3 the switches are checked for both enabled and disabled states. Eg. If set to 1, the unit will pre-purge when the switch is enabled, but will not start ignition until the switch is subsequently disabled.
			Terminal 81 can be used as a low flame hold facility and Terminal 81 can be used to for Night Setback (Option 85) (See Section 2.18.12).
		4	Same as 0 + LFH facility
		8	Same as 0 + Night Setback
		9	Same as 1 + Night Setback
		12	Same as 0 + LFH facility + Night Setback.
125	**0**		**Gas valve proving & high-low pressure limit checked - fuel 1:**
		0	Not checked on fuel 1.
		1	Gas valve proving low pressure limits checked.
		2	Oil low pressure limit.
		3	Gas low pressure limit.
		4	External VPS optioned. It is possible within the unit to use an external VPS for this operation. If this is set then the system will wait for a mains voltage input on Terminal 55 to confirm that the external VPS operation is completed. The time period for this is 10 minutes before the voltage input must be seen otherwise a lockout will occur (contact Autoflame before use).
126	**0**		**Oil high-low pressure limit checked - fuel 2:**
		0	Not checked on fuel 2.
		1	Gas valve proving low pressure limits checked.
		2	Oil low pressure limit.
		3	Gas low pressure limit.
		4	External VPS. See Option 125 for information.

Option No.	Factory Setting	Option Value	Description
127	**0**		**Unused.**
128	**0**		**Unused.**
129	**0**		**VPS Operation:** This Option must be set to 0 during commissioning. Once commissioning is complete it can then be set to 1
		0	VPS operates before burner start up.
		1	VPS operates after burner run (low gas not checked before burner starts).
130	**0**		**Gas valve proving:**
		0	Two valve gas valve proving.
		2	Three valve gas valve proving. Vent valve normally open.
131	**0**		**Unused.**
132	**20**		**Gas valve proving time:**
		10 - 30	Seconds.
133	**0**		**Unused.**
134	**3**		**VPS valve opening time:**
		3 - 20	Seconds.
135	**0**		**Change purge time:**
		0	Seconds.
		1	Minutes.
		2	NFPA post purge (seconds)- post purge time is set in Option 118.
		3	NFPA post purge (minutes)- post purge time is set in Option 118.
			Note: *If this Option is set to 2 (NFPA post purge) then Option 118 must be set to a value of 15 or greater otherwise a lockout warning message will occur. During the NFPA post purge the servo motors will remain at the position that they were in before a normal shutdown or lockout (see also Option 67 - 70). The NFPA post purge will occur under any normal shutdown or lockout at any point in the firing sequence.*
136	**5.0**		**Unused.**
137	**0**		**Unused.**
138	**0**		**Unused.**
139	**0**		**Unused.**
140	**0**		**Unused.**
141	**0**		**Unused.**
142	**60**		**Unused.**

Option No.	Factory Setting	Option Value	Description
143	**0**		**No pre purge:**
		0	OFF
		1	ON
144	**4**		**Unused.**
145	**0**		**Unused.**
146	**0**		**Unused.**
147	**0**		**Unused.**
148	**0**		**Unused.**
149	**0**		**Unused.**
150	**0**		**Clear ALL commissioning data and gas/air sensor re-commission:**
		5	Clear commissioning data - Restore Options/Parameters to factory settings.
			For safety reasons, Options, 110 - 150 also have to be entered in as Parameters. It is the responsibility of the commissioning engineer to ensure that all settings are set in accordance with the appropriate standards, local codes and practices e.t.c..

2.18.4.2 Parameters

To select and modify Parameter mode, the Channels1, Channel 2 and Channel 3 will refer to descending rows of buttons respectively; Channel 1 referring to the top row, Channel 2 to the second row, etc.

In order to enter Parameter mode, the Mini Mk7 EVO unit must be in Commission mode. To enter Commission mode, the Mini Mk7 EVO must be restarted and the COM button pressed when its LED flashed. The password screen is then displayed, with the number of times the selected fuel was commissioned,

```
PASSWORD                0
PASSWORD                0
F1 COMMISSIONED        23
```

By using the Channel 1 and Channel 2 buttons to set the password code, then press the CLOSE ON/OFF button. The number of servo motor channels (default to two: Channel 1 and Channel 2) will then be displayed.

Press the OPEN LEAD BOILER and CLOSE ON/OFF buttons simultaneously in order to enter Parameter mode. The following screen will then be displayed,

```
PARAMETER NO        1=  3
DO NOT ADJUST
```

For each Parameter, the rows 2, 3 and 4 will display the textural description of the option number and value.

To change the Parameter number, adjust the buttons on the second row/Channel 2.

To change the Parameter value, adjust the buttons on the third row/Channel 3.

Any number of Parameter values can be changed when in the Parameter mode, a user does not have to leave the Parameter mode per Parameter change made. When all Parameter changes and/or modifications have been made, press the CLOSE ON/OFF button.

All new Parameters are then stored in the Mini Mk7 EVO memory and the unit will restart.

Parameter No.	Factory Setting	Parameter Value	Description
1	**3**		**Unused.**
2	**1**		**Unused.**
3	**1**		**Unused.**
4	**45**	5 - 100	**EGA:** Number of seconds 'ENTER' button is disabled after 'EGA' button is pressed during commissioning and single point change.
5	**4**		**Unused.**
6	**60**		**Unused.**
7	**16**		**Unused.**
8	**30**		**Unused.**
9	**60**	5 - 240	**EGA:** Auto commission time (seconds). How long the air rich and fuel rich positions are held during commissioning.
10	**0**		**EGA:** Version
		0	Mk6 EGA.
		1	Mk7 EGA.
11	**15**	5 - 60	**EGA:** Air flush time. This is the flush out period between going air rich and fuel rich during
12	**0**		**Unused.**
13	**20**		**Unused.**
14	**20**		**Unused.**
15	**5**	2 - 100	**Golden start timer:** Number of seconds that the postioning motors are held at the golden start (choke) position. See Option 29. This time starts from the ignition point.
16	**12**		**Unused.**
17	**3**		**Unused.**
18	**20**		**Unused.**
19	**1**		**Unused.**
20	**0**		**Unused.**
21	**0**		**Unused.**
22	**0**		**Unused.**
23	**0**		**EGA:** Trim add air when CO present. When trim is taking place, if the O2 and CO2 appear on the air rich side but the CO appears on the fuel rich side then the air damper will open further to remove CO.
24	**120**	20 - 240	**EGA:** Calibration time (seconds).

Parameter No.	Factory Setting	Parameter Value	Description
25	**30**	5 - 100	**EGA:** Time between each sample (trim).
26	**8**	1 - 50	**EGA:** Number of samples (trims) between each trim cycle.
27	**25**		**Unused.**
28	**200**		**Unused.**
29	**0**		**Unused.**
30	**10**	0 - 40	**Filters load sensor readings:** Temperature and pressure detectors.
		0	No filtering
		20	Maximum filtering
31	**0**		**Selects efficiency to be displayed:**
		0	English (USA/Canada - incorporates Hydrogen & moisture loss)
		1	European.
32	**0**		**Unused.**
33	**0**		**Unused.**
34	**0**		**Unused.**
35	**2**	0 - 10	**O2 change to detect residence time:**
36	**5**		**Unused.**
37	**20**		**Unused.**
38		0 - 255	**MM password:** Channel 1.
39		0 - 255	**MM password:** Channel 2.
40	**10**		**Unused.**
41	**5**		**Unused.**
42	**4**		**Unused.**
43	**7**		**Unused.**
44	**4**		**Unused.**
45	**2**		**Unused.**
46	**21**		**Unused.**
47	**0**		**Unused.**
48	**0**		**Unused.**

Parameter No.	Factory Setting	Parameter Value	Description
49	**0**		**Required setpoint:** This is important if using Parameter 72.
		0	Stored permanently in memory
		1	Not stored permanently in memory.
50	**0**		**Unused.**
51	**0**		**Unused.**
52	**0**	0 - 2	**External load detector:** Number of decimal points. (see table below)
53	**0**	0 - 9990	**External load detector:** Maximum value. (see table below)
54	**0**	0 - 100	**External load detector:** Maximum voltage. (see table below)
55	**0**	0 - 9990	**External load detector:** Minimum value. (see table below)
56	**0**	0 - 100	**External load detector:** Minimum voltage. (see table below)

Example 1: **Pressure** application		Example 2: **Temperature** application	
Required/Actual Range -	0.0 – 100.0 Bar	Required/Actual Range -	1000 – 2000 F
Input Signal -	0 – 10 Volts	Input Signal -	1 – 6 Volts
Option 1 -	11	Option 1 -	10
Option 65 -	2	Option 65 -	1
Parameter 52 -	1	Parameter 52 -	0
Parameter 53 -	1000	Parameter 53 -	2000
Parameter 54 -	10.0	Parameter 54 -	6.0
Parameter 55 -	0	Parameter 55 -	1000
Parameter 56 -	0.0	Parameter 56 -	1.0

57	**0**		**Unused.**
58	**1**		**Unused.**
59	**0**		**Unused.**
60	**0**		**Unused.**
61	**900**		**Unused.**
62	**0**		**Unused.**
63	**0**	0 - 1	**Reset burner history:** set to 1 for 2 seconds, then set back to 0 to clear lockout history.
64	**0**	0 - 1	**Reset totalised fuel flow metering:** Set to 1 for 2 seconds then set back to 0 to reset fuel flow metering values for all 4 fuels For indivdual fuels see Option 57.
65	**0**	0 - 1	**Reset burner history:** Set to 1 for 2 seconds, then set back to 0 to reset burner history, hours run and number of start ups.
66	**0**		**Unused.**
67	**0**		**Unused.**
68			**Unused.**

Parameter No.	Factory Setting	Parameter Value	Description
69	**0**		**External modulation input range:**
		0	0 - 20mA, 0 - 10V.
		1	4 - 20mA, 2 - 10V.
70	**0**	0 - 20	**Filtering of the analogue input:** Terminals 7/8/9. The value set is the number of readings over which an avergae is taken. The smaller the setting the quicker the response time.
		0	Default value of 5.
		1	Minimum.
		20	Maximum.
71	**0**	0 - 20	**Resolution of the analogue input:** Terminals 7/8/9. The effect of resolution is to filter the noise on the input which causes hunting as the MM resonds to a changing signal.
		0	Default value of 5.
		1	Minimum.
		2	Maximum.
72	**0**		**Unused**
73	**0**		**Unused.**
74	**0**		**Trim method:** Changes the method of trim from the normal angular degrees trim to a trim that works on the area that is open on the damper blades to allow air through.
		0	Angular degrees trim.
		1	Area trim
75	**0**		**Unused.**
76	**0**		**Unused.**
77	**0**		**Unused.**
78	**0**		**Unused.**
79	**0**		**Unused.**
80	**0**		**Unused.**
81	**0**		**Unused.**
82	**0**		**Unused.**
83	**0**		**Display diagnostic values:**
		0	Disabled.
		1	Enabled.
84	**0**		**Unused.**
85	**0**	0 - 250	**Modulation exerciser:** Repeatedly run between high and low flame. The higher the value, the longer high/low flame position is held for.

Parameter No.	Factory Setting	Parameter Value	Description
86	**0**	0 - 99	**IBS change down threshold:** If left at 0 change down threshold is 85% firing rate.
87	**0**	0 - 100	**IBS change up threshold:** If left at 0 change up threshold is 95% firing rate.
			Note: *If Parameter 86 is set greater than Parameter 87 then they will default to 85% to 95% respectively.*
88	**0**	-50 - +50	**Adjust errors in the OTC sensor reading:** If the actual reading is too high set a negative value to adjust, if the reading is too low set a positive value.
		0 Each unit	No adjustment made. 1 F or 0.5 C (Set in Option 65).
89	**0**		**Unused.**
90	**0**		**Flue gas recirculation:**
		0 1	Positions entered after commissioning by performing single point change. Positions entered during commissioning.
91			**Unused.**
92	**0**		**Unused.**
93	**0**		**Unused.**
94	**0**		**Unused.**
95	**0**		**Unused.**
96	**0**		**Unused.**
97	**0**		**Unused.**
98			**Unused.**
99			**Unused.**
100	**0**		**Assured low fire shut off:**
		0 1	Disabled Burner modulates to low fire before turning off when above internal stat.
101	**0**		**Unused.**
102	**0**		**Unused.**
103	**0**		**Unused.**
104	**0**		**Unused.**
105	**0**		**Unused.**
106	**0**		**Unused.**

Parameter No.	Factory Setting	Parameter Value	Description
107	**0**		**Unused.**
108	**0**		**Unused.**
109	**0**		**Unused.**
			NOTE: Parameters 110 - 150 are a repeat of their respective options. These values need to be entered as both an Option value and a Parameter value for safety reasons.

2.18.5 VALVE PROVING AND MONITORING

2.18.5.1 VPS In the Mini Mk7

VPS in the Mini Mk7 can be used in two ways for two different fuels:

1. Externally
2. Internally

Internal VPS: Automatically opens and closes the main gas valve outputs and vent valve outputs in a controlled sequence to test the integrity of the gas train. The integrity on these valves is proven by an input on Terminal 82. The sequence in which these valves are controlled is determined by the following Options/Parameters.

Option/Parameter 125 = 1 to initiate internal VPS on fuel 1

Option/Parameter 126 = 1 to initiate internal VPS on fuel 2

Option/Parameter 129 = Determines if VPS is before or after the burner cycle. **This must be set to 0 (VPS operates before burner start off) for the Mini Mk7 EVO to be commissioned**.

Option/Parameter 130 = 2 or 3 valve proving

Option/Parameter 132 = Speed in which external input on Terminal 82 must be registered. Typically this input is from a pressure switch.

These Options and Parameters must be set to the same value for safety reasons, if any Option or Parameter 110 – 150 have different values the unit will remain in "IDLE" mode.

As well as setting these Options/Parameters correctly the Mini Mk7 EVO must also be correctly wired for Internal VPS.

For 2 valve proving, the two main fuel valves should be wired securely into Terminals 60 and 61.

For 3 valve proving, the two main fuel valves should be wired securely into Terminals 60 and 61, with the vent valve wired securely into Terminal 62.

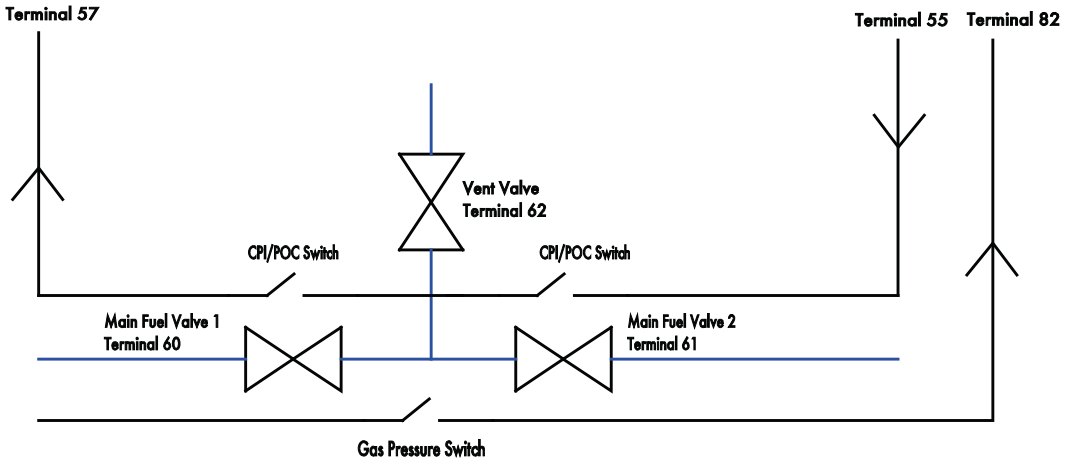

Figure 2.18.5.1 – Internal VPS set-up

External VPS: Only checks for an input on Terminal 55. This input is typically supplied to the Mini Mk7 EVO from an external valve proving device, such as a Dungs or Siemens VPS system. If this is set then the system will wait for a mains voltage input on Terminal 55 to confirm that the external VPS operation is completed. The time period for this is 10 minutes before the voltage input must be seen, otherwise a lockout will occur. This input is normally used for gas valves POC/CPI operation. The use of External VPS is determined by the following Options/Parameters.

Option 125 = 4 to initiate external VPS on fuel 1
Option 126 = 4 to initiate external VPS on fuel 2

Air Pressure Switch
The Mini Mk7 EVO does not contain the functionality to include an air pressure sensor, instead an air pressure switch is used to prove there is air present when going to purge. This is accomplished by placing the air switch between a live input and Terminal 54.
On burner start-up, a first check has to be made to ensure the air switch is not forced closed. The Mini Mk7 EVO will therefore expect no input on Terminal 54 on the start-up checks: "WAITING AIR SWITCH" check. A second check is made when the burner is at purge where the Mini Mk7 EVO expects an Input on Terminal 54, no input at this point will result in a "NO AIR PROVING" lockout. An input on Terminal 54 must also remain through the firing cycle.

2.18.5.2 Steam Pressure Sensor

Steam pressure sensor	Operational Range	
MM 10010	0.2 – 3.8 Bar	1.5 – 45 PSI
MM 10008	2 – 23 Bar	30 – 267 PSI
MM 10009	2 – 38 Bar	30 – 445 PSI
MM 10017	0 – 100 Bar	0 – 1500 PSI

FOR CORRECT OPERATION THE DETECTOR MUST BE INSTALLED WITH A PRESSURE SIPHON LOOP. DO NOT INSTALL AN ISOLATION VALVE BETWEEN DETECTOR AND PRESSURE VESSEL

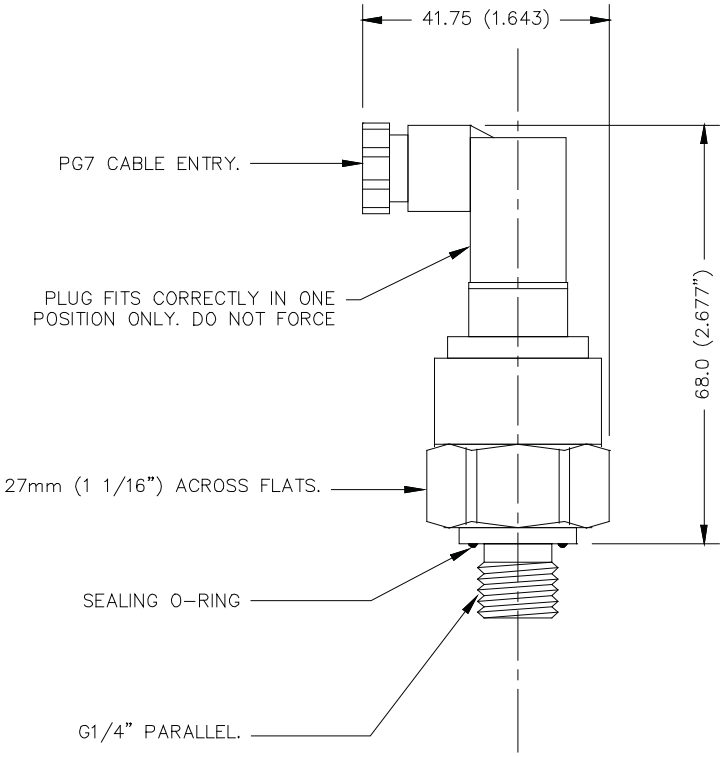

NOTE: EARTH PIN IS SLIGHTLY LARGER TO ENSURE CORRECT CONNECTION DO NOT FORCE.

ELECTRICAL CONNECTION
Shown from behind.

Ratings:

IP RATING :	65
N.E.M.A. :	4
TORQUE SETTING :	15 – 20 Nm
O – RING MATERIAL	VITON
MAX. STORAGE TEMP :	-25 TO +85 DEG.C
MAX OPERATING TEMP :	-25 TO +85 DEG.C
MDEIA TEMP (STEAM) :	-25 TO +85 DEG.C

DO NOT USE CASE TO TIGHTEN PRESSURE CONNECTION
MAXIMUM 2.5 mm FLAT BLADE SCREW DRIVER FOR ELECTRICAL CONNECTIONS

Part No.	Actual Range	Over Pressure	Burst Pressure
MM 10010	3.0-55.0 PSI (0-3.8 Bar)	145 PSI (10 Bar)	174 PSI (12 Bar)
MM 10008	30-330 PSI (0-23.8 Bar)	870 PSI (60 Bar)	1087 PSI (75 Bar)
MM 10009	30-550 PSI (0-38.0 Bar)	1160 PSI (80 Bar)	1740 PSI (120 Bar)

2.18.5.3 Boiler Water Temperature Sensor

Part Number: MM 10006

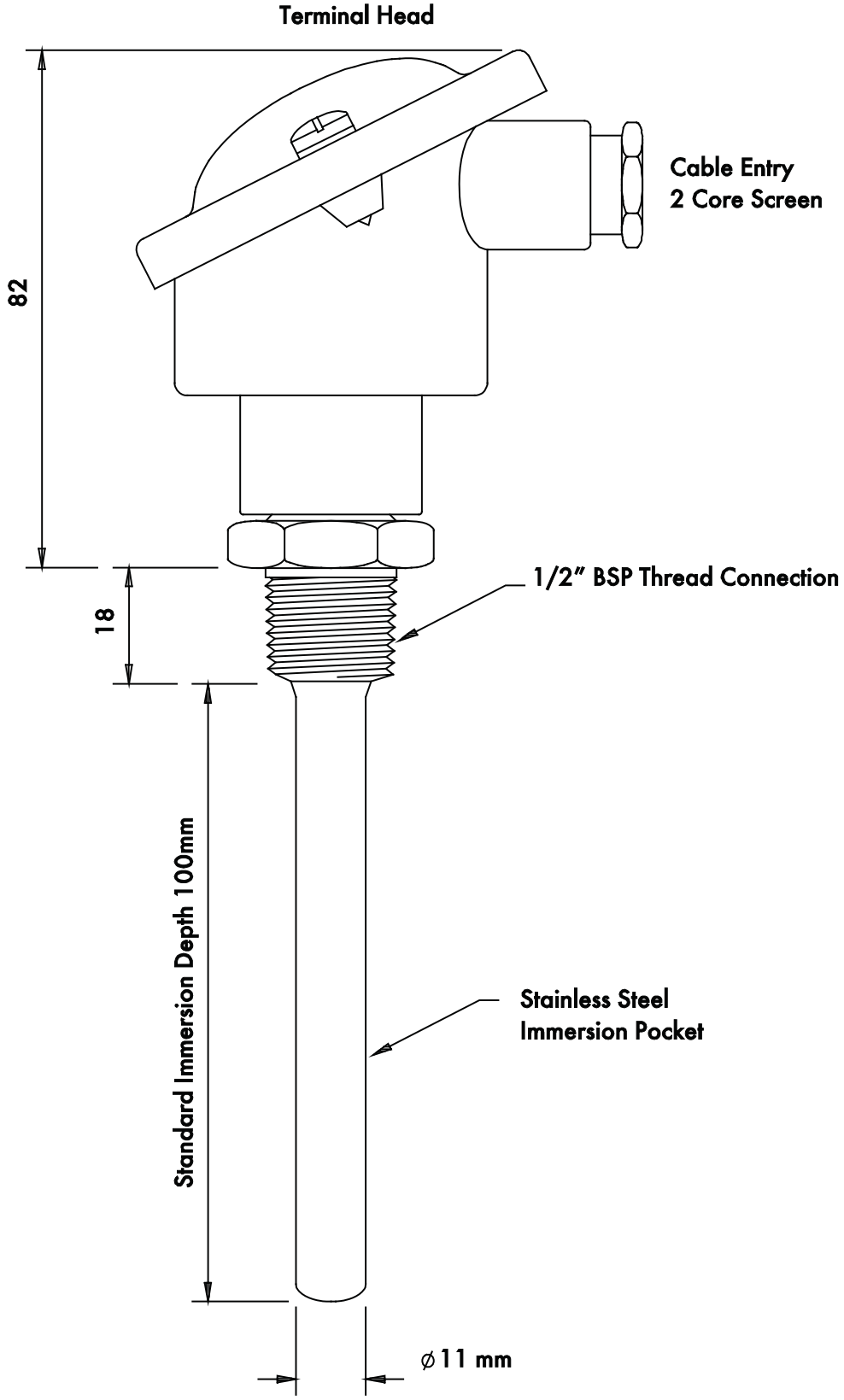

2.18.5.4 Outside Temperature Compensation

Outside Temperature Compensation (OTC) allows the boiler set point to be varied according to the outside air temperature. For example, as the air temperature drops the boiler set point can be increased. An additional outside temperature module is required (part number MM 60015).

Up to 10 Mini Mk7 EVO modules can be used with one outside temperature sensor and one outside temperature module, see Figure 2.18.5.4, where the Mini Mk7 EVO units are connected in a daisy chain. A RS485 Data Link cable is used to connect each unit together on Terminals 27 and 28 and correctly screened. If the Outside Temperature Compensation utility is to be used, an Autoflame Data Transfer Interface (DTI) can still be used with the Mini Mk7 EVO systems by wiring the DTI into the end of the daisy chain.

The Mini Mk7 EVO unit Options regarding OTC are as follows:

Option 79 - the **Lowest Required Setpoint**
The minimum value of the setpoint when OTC becomes active.

Option 80 - **Outside Temperature Compensation (OTC)**
In this option OTC is ENABLED or DISABLED depending on whether it is in use or not.

Option 81- **Maximum required setpoint at minimum outside temperature**
Maximum boiler setpoint value at the lowest value of the outside temperature.

Option 82 - **Minimum outside temperature**
Lowest value of the outside temperature.

Option 83 - **Minimum required setpoint at maximum outside temperature**
Minimum boiler setpoint value at the lowest value of the outside temperature.

Option 84 - **Maximum outside temperature**
Highest value of the outside temperature.

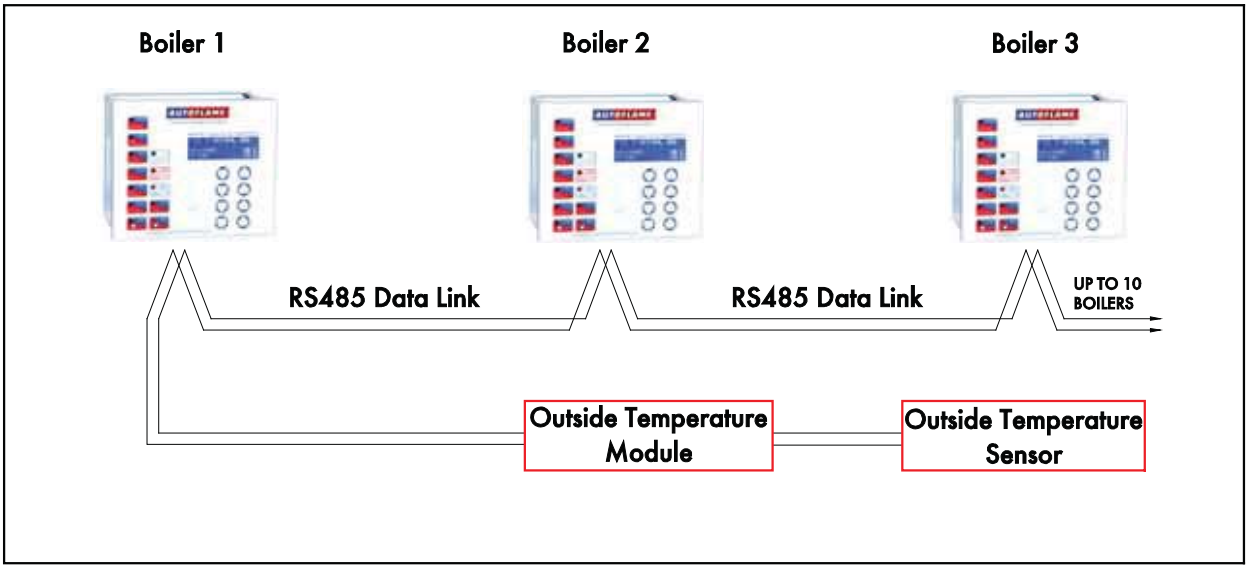

Figure 2.18.5.4 Example of a Mini Mk7 EVO OTC setup

2.18.5.5 OTC Sensor

Part Number – MM 60007

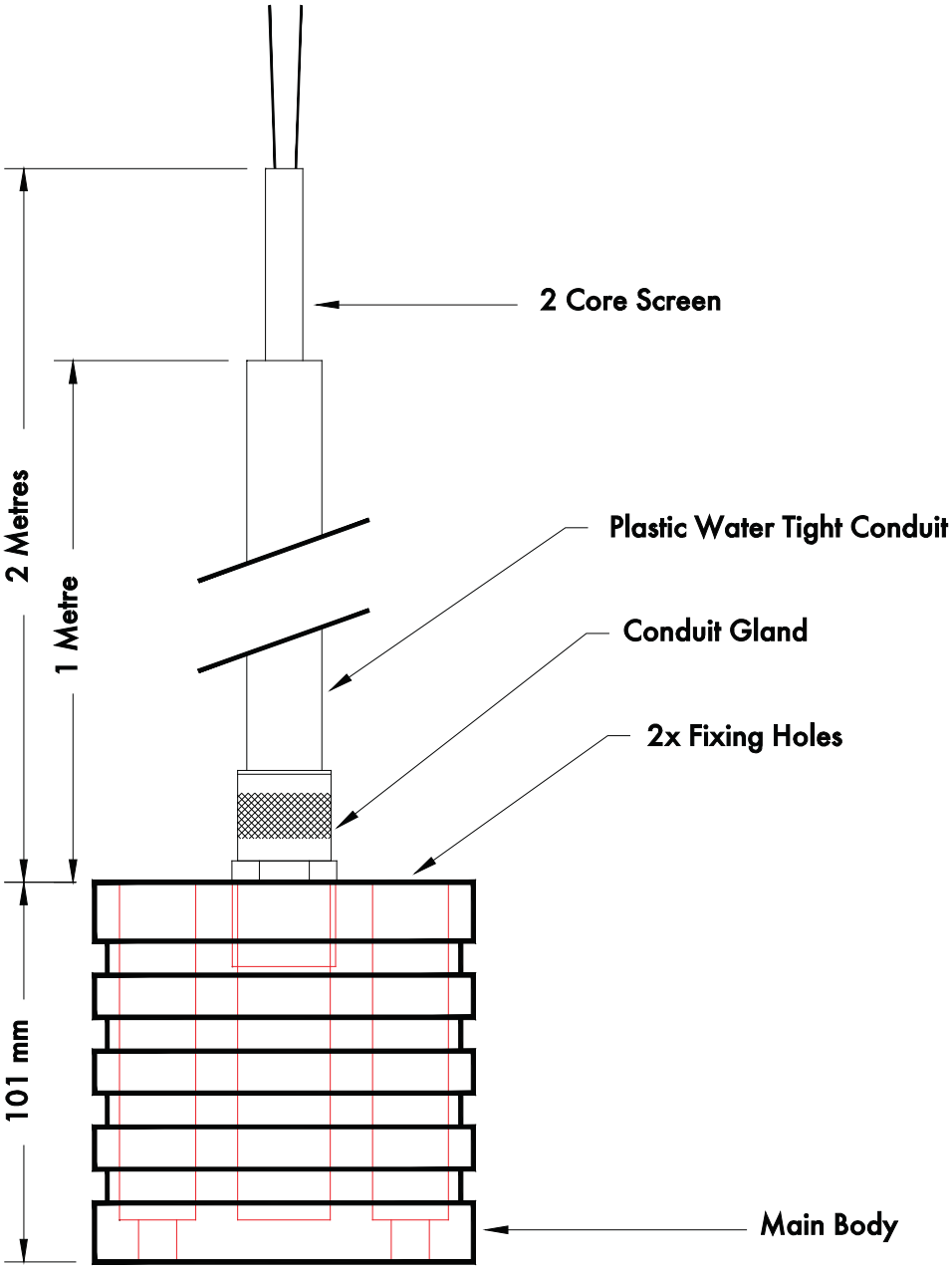

IP RATING	65
N.E.M.A.	4
POWER CONSUMPTION	POWERED BY THE OTC MODULE
HOUSING	ALUMINIUM
MOUNTING	ANY ORINENTATION

2.18.6 VALVE COMMISSIONING

In order to commission gas and/or oil valves, the Mini Mk7 EVO system has to be setup correctly; both in terms of the Options and Parameters set and wiring.

For 2 valve proving, the two main gas valves should be wired securely into Terminals 60 and 61.

For 3 valve proving, the two main gas valves should be wired securely into Terminals 60 and 61, with the vent valve wired securely into Terminal 62.

The Options and Parameters concerned with valve proving are found in Options/Parameters 110-150. When these are set, both the Option and Parameter must be set to the same value otherwise the Mini Mk7 EVO unit will remain in "IDLE" mode.

The Mini Mk7 EVO unit Option/Parameters for valve commissioning are as follows:

Option/Parameter 125/126

External VPS fuel 1/fuel2. Depending on whether the system has an external VP system, enable or disable these Options/Parameters accordingly; both are default to =0 (DISABLED).

Option/Parameter 129

VPS Operation. This setting defines when VPS operates, either before or after the burner is running. If the Mini Mk7 EVO has not been commissioned, this Option/Parameter must be left in its default state = 0 (VPS operates before burner start up).

Option/Parameter 130

Gas valve proving. This setting defines either two valve gas valve proving or three valve gas valve proving depending upon which system is connected to the Mini Mk7 EVO.

Option/Parameter 132

Gas valve proving time. The time period over which valve proving occurs.

Option/Parameter 134

Gas valve proving, valve opening time. Time the inlet valve opens.

2.18.6.1 Air Pressure Switch

The Mini Mk7 EVO does not contain the functionality to include an air pressure sensor, instead an air pressure switch is used to prove there is air present when going to purge. This is accomplished by placing the air switch between a live input and Terminal 57.

On the burner start-up, a first check has to be made to ensure the air switch is not forced closed. The Mini Mk7 EVO will therefore expect no input on Terminal 54 on the start-up checks: "WAITING AIR SWITCH" check. A second check is made when the burner is at purge where the Mini Mk7 EVO expects an input on Terminal 54, no input at this point will result in a "NO AIR PROVING" lockout. An input on Terminal 54 must also remain throughout the firing cycle.

2.18.7 VARIABLE SPEED DRIVE (VSD)

The Mini Mk7 EVO has the capability of using one VSD on Channel 4. A VSD is typically used on an application to modulate the speed of a blower or fan in parallel with an inlet or outlet damper. Instead of running the blower or fan at maximum speed and modulating an inlet or outlet valve/damper, the fan can be operated at lower speed in conjunction with inlet/outlet fan valve/damper modulation. The advantages of using a VSD included i) reduced energy consumption, ii) reduced levels of noise from the fan/blower and iii) by running a blower/fan at a lower rate, potential maintenance savings.

The following recommendations are given to assist with the installation and fault finding when using a VSD

VSD selection
The choice of VSD is critical to the application. Ensure that the correct size VSD has been selected for the blower, fan or pump. It must be suitable for the motor and have the necessary input and output signals.

Mains cable and motor cabling connections
It is recommended that the power connections from the VSD to the motor for the mains supply (3-phase) and fuses are to the correct dimensions in according with the kW rating of the motor and VSD A four core conductor screened cable is also recommended for the motor cabling due to electrical interference that can result from changes voltage and current in a VSD system.

General considerations to avoid disturbances
It is advised that the motor cables should not be installed in the same cabling routes as other cables i.e. avoid long parallel runs with other cabling. Due to the potential rapid changes inherent in VSD applications, VSD cabling can induce noise and electrical disturbance preventing other systems from working. Disturbances caused by radiation from the motor cable can be reduced by installing in-line chokes in the motor cable. However, these chokes may reduce the motor voltage. If noise problems do exist and unstable output signals cannot be contained within the disparity band, contact the supplier of the VSD for information and advice.

Setting the V.S.D for operation with the Mini Mk7 EVO.
Due to the vast range of VSD's in the market place, it is not possible to provide all the settings for all the types of VSD - although some common rules do apply. The minimum and maximum frequency from the VSD (Hz) should be adjusted before commissioning the VSD with the Mini Mk7 EVO. Additionally, the ramp time should be set for the fastest time possible taking into account limitation of the motor and application itself.

VSD display

To display input and output values of the VSD, press the 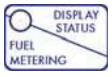

button to show the fuel currently selected and the required and actual setpoint temperatures or pressures. Pressing the 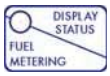

button a second time displays the VSD operation.

2.18.7.1 Input and Output Signals in Relation to Frequency

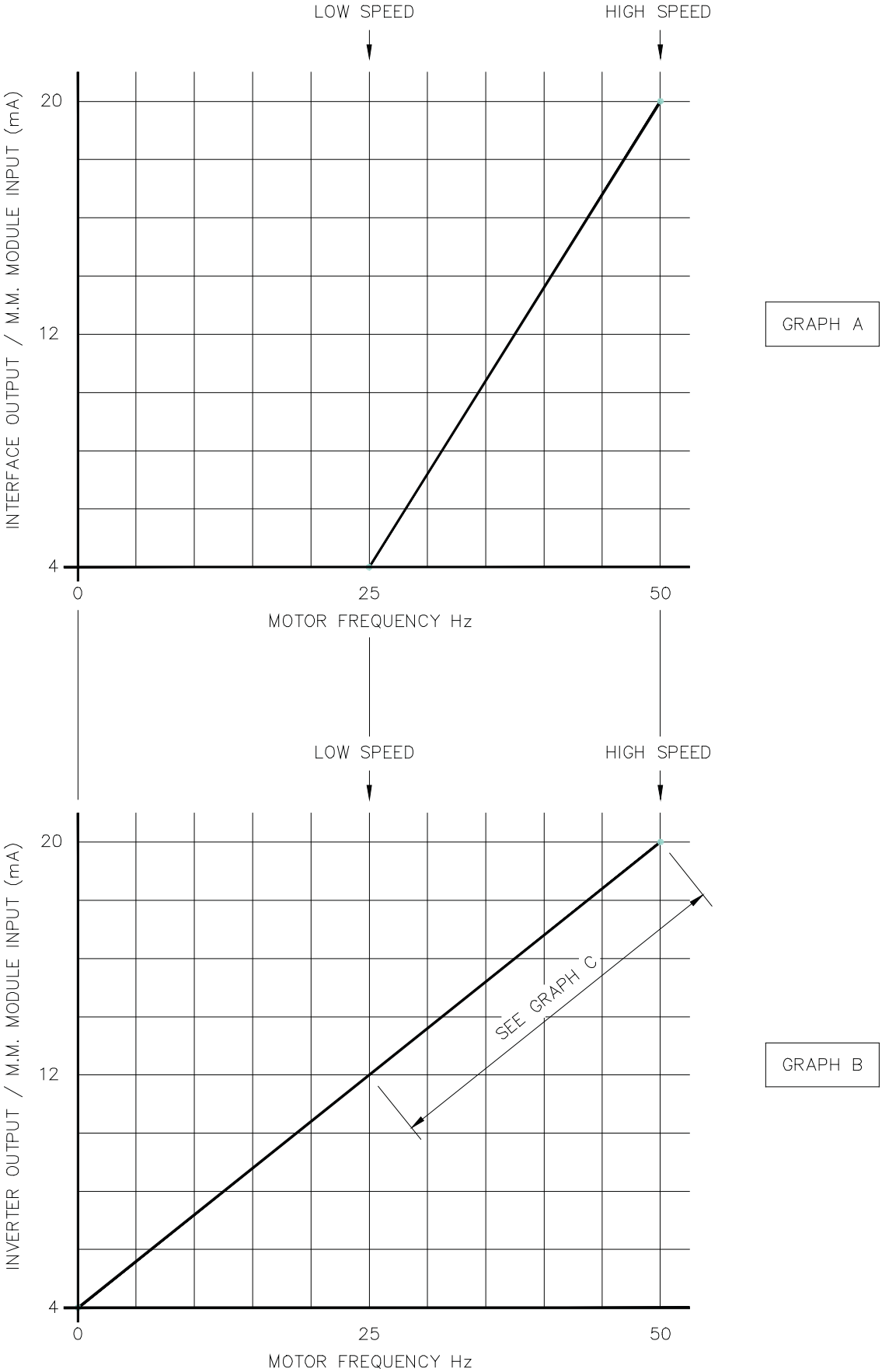

2.18.7.2 Operational Characteristics of Inverter Output/MM Module Input Relation to Frequency

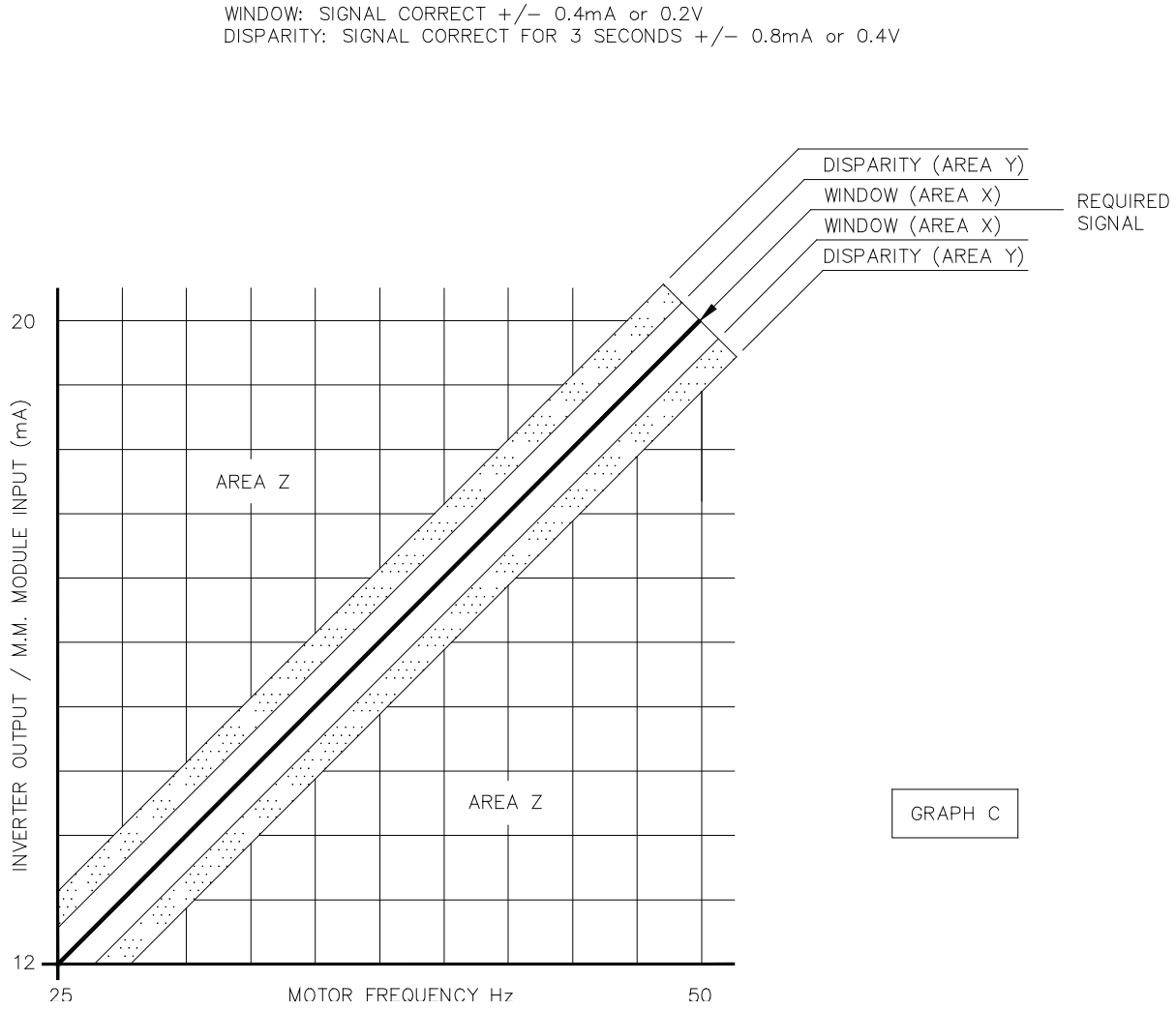

2.18.7.3 VSD Safety Software

During VSD setup, communications signals from the Mini Mk7 EVO to the VSD and return signal to the Mini Mk7 EVO from the VSD are measured. While the Mini Mk7 EVO is operating, these values are continuously monitored. An amount of variation or "disparity" is allowed by the Autoflame control system however, if the signal returning to the Mini Mk7 EVO from the VSD varies too much from its commissioned values for too long a period of time, the system will lockout the burner. The amount of variation/disparity allowed for is illustrated in Section 2.18.7.2 in the terms "Required Signal", "Window (Area X)", "Disparity (Area Y)" and "Area Z". These represent the following,

Required Signal: This is the signal the Mini Mk7 EVO is expecting to measure from the VSD This value would have been recorded when the VSD was first commissioned.

Window (Area X): This is the amount of natural variation outside of the Required Signal allowed for by the Mini Mk7 EVO and corresponds to +/- 1 Hz motor frequency.

Window (Area Y): In this band, the Mini Mk7 EVO unit will lock the burner out if the VSD signal varies from the Required Signal for more than 3 seconds, this corresponds to +/-
2 Hz motor frequency

Area Z: If the return VSD signal to the mini Mk7 EVO is ever in this area for longer than
1 second, the Mini Mk7 EVO will lock the burner out.

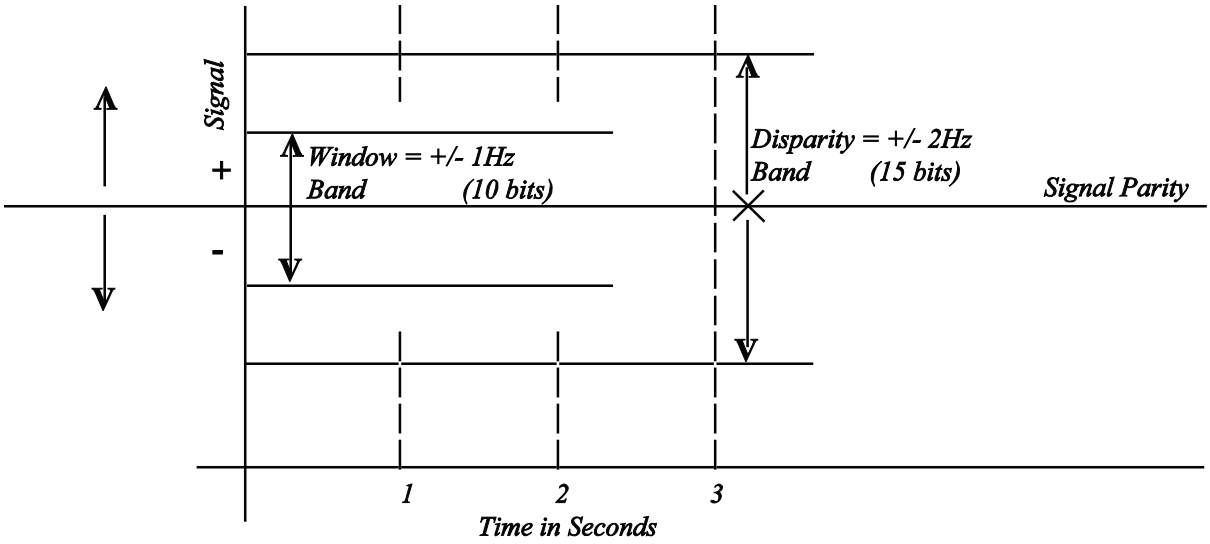

Figure 2.18.7.4 Time periods allowed by the Mini Mk7 EVO software for differing magnitudes of disparity in commissioned VSD output and input signals (mA) and motor frequency (Hz)

2.18.7.4 VSD Setup

To setup a Mini Mk7 EVO with a VSD, Options 90 to 97 must be set correctly, these are as follows:

Option 90 - VSD operation on channel 4
Specifies whether a VSD is to be enabled (OPTIONED) or not (NOT OPTIONED).

Option 91 - Output from MM to VSD
Displayed units on the mini Mk7 EVO for the signal outputted to the VSD (4-20mA, 0-10V or Hz).

Option 92 - Output low speed from MM to VSD
Output in Hz of the lowest speed the motor will operate at (typically ~ 25Hz).

Option 93 - Output high speed from MM to VSD
Output in Hz of the highest speed the motor will operate at (50 or 60 Hz depending on country).

Option 94 - Input signal to MM from VSD
Displayed units on the Mini Mk7 EVO for the signal returned from the VSD (4-20mA, 0-10V or Hz).

Option 95 - Input units displayed
Units inputted from the Mini Mk7 EVO to the VSD, either same as Option #91 or Hz.

Option 96 - Input low speed to M.M from VSD
Output in Hz of the lowest speed the motor will operate at (typically ~ 25Hz).

Option 97 - Input high speed to M.M from VSD
Output in Hz of the highest speed the motor will operate at (50 or 60 Hz depending on country).

2.18.7.4.1 Calibrating the Mini Mk7 EVO Output Range to the VSD

As a 4-20 mA signal is used from the Mini Mk7 EVO to control the output speed of the VSD the range may not be set correctly and as such the VSD may not reach its lowest and/or highest speed, ie at high speed the VSD may only reach 49.8 Hz rather than 50 Hz. In such instances it is possible to calibrate this 4-20 mA signal so that 4 mA is given out at low speed and 20 mA is given out at speed. To calibrate the output range follow the following instructions,

Enter commissioning mode by pressing the

button after turning on the Mini Mk7 EVO, enter the password using the and press the

button. Then enter the Close and Open positions as you would do during a normal commissioning.

After Entering the Open and before entering the Start Position press the 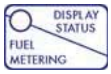

button twice to bring up the VSD screen shown below,

```
TO    VSD        20.0  MA
FROM  VSD         0.0  MA
```

Once on this screen press the

button to enter the calibration screen below,

```
VSD CALIBRATION
SET MINIMMUM (0-255)
        56
PRESS DISP TO CONT.
```

In this screen you set your minimum output from the Mini Mk7 EVO to the VSD which is either 4 mA or 0V which will give you the low speed on the VSD To change the value on the screen use the buttons on channel 4 so that you are as near as possible to a 4 mA or 0V output from the Mini Mk7 EVO. Once the minimum has been achieved press the

button to continue onto the maximum screen below,

```
VSD CALIBRATION
SET MAXMIUM (0-255)
        156
PRESS DISP TO STORE
```

In this screen you set your maximum output from the Mini Mk7 EVO to the VSD which is 20 mA to give you the high speed on the VSD To change the value on the screen use the buttons on channel 4 so that you are as near as possible to a 20 mA or 10V output from the Mini Mk7 EVO. Once the maximum has been achieved press the

button to store the values and to go back to the display screen to continue with the commissioning.

Note: It is advised that this process is carried out during first time commissioning as the Mini Mk7 EVO stores values of the input and output from the VSD during commissioning and changing these values by calibrating them may fall outside of the VSD safety software ranges as described in Section 2.18.7.3. If the Output from the Mini Mk7 EVO is calibrate after commissioning a full re-commission may be needed so that VSD lockouts and errors do not occur.

Commissioning, setup and burner start-up must only be carried out by a trained combustion engineer.

2.18.8 COMMISSIONING THE COMBUSTION CURVE

Commissioning of the Mini Mk7 EVO unit should occur once all wiring and process specific Options and Parameters have been setup.

CH1, CH2, CH3 and CH4 refer to the row of buttons, with CH1 at the top as the first row.

Note: Throughout the commissioning procedure the COM LED button is illuminated. Commissioning steps are as follows.

1. Ensure 'stat' control circuit is closed (refer to the wiring schematic, Section2.18.2.3), i.e. ensure that there is an input on Terminal 53.

2. Select fuel. Start up the Mini Mk7 EVO and press the

button when the Autoflame Engineering logo appears.

Note: If the fuel selected is being re-commissioned, press

before the LEDs stop flashing (approximately 5 seconds).

3. The "ENTER PASSWORD" screen is displayed. Enter the password by adjusting the numbers accordingly with the CH1 and CH2 buttons . When the password has been entered, press the

button.

4. The LED lights on the

button will flash. When the burner motor starts, the closed position of the servo motors can be entered. To do this, press the

button and adjust the servo motor positions as required for the Channel1, Channel 2 and Channel 3. At this point in commissioning the variable speed drive channel, Channel 4, cannot be changed and will indicate a maximum output value. This ensures the output of the burner fan is at its maximum. Once the desired positions are ready to be entered, press the

button.

Note: No error checking of the servomotors occurs at this stage of commissioning. Therefore, care must be taken not to drive the servomotors positions beyond any mechanical limitations that might be present on site.

5. Once the "CLOSED" position of the servomotors has been defined, the "OPEN" position is next to be inputted. To enter the open position, press the

button, adjust the servomotor positions to their open positions using the buttons. Once correct press the

button.

6. The "OPEN" and "CLOSED" valve positions have now been entered. After the burner has purged it will then require a start position indicated by the

button LED flashing.

DO NOT ENTER THE "START" POSITION BEFORE REDUCING THE FUEL INPUT AS THIS COULD POTENTIALLY RESULT IN a) AN UNSTABLE OPER ATING STATE, b) SERSIOUS PHYSICAL DAMAGE or c) LOSS OF LIFE.

Adjust the servomotor positions down using the buttons to the "START" position and press the

button. The burner will then "light off".

7. Once flame combustion is steady, the "HIGH FIRE" position is the next point to be entered. Press the

button and change the servomotor positions to the corresponding "HIGH FIRE" position. To do this safely, make small adjustments to the servomotor positions using the buttons. Once at the at the "HIGH FIRE" position, press the

button.

8. At this stage in the commissioning process, the Autoflame Mini Mk7 EVO system asks for a number of user defined "INTER" points. These are entered between "HIGH FIRE" down to the "LOW FIRE" or "START" position. To enter each "INTER" point, press the

button and adjust the servo motor positions using the buttons. After the servomotor position has been reached and combustion is considered optimal, save each "INTER" point by pressing the

button.

9. A minimum number of **three** "INTER" points are required by the Autoflame Mini Mk7 EVO before the LED on the

button will flash indicating the burner light off position can be defined. A maximum number of **fifteen** "INTER" points can be defined. Once the optimal number of "INTER" points have been inputted, the "START" position can be defined by pressing

and adjusting the servomotor positions to their "START" position. This "START" position also corresponds to the Low Flame Hold (L.F.H.) position. Once each servomotor channel is at the required point, press the

button to enter the positions.

10. The combustion curve for the selected fuel has now been defined. The LED on the

button will flash. Press the

button to complete the commissioning process and allow the burner to begin modulation.

2.18.8.1 Notes on Programming the Combustion Curve

If an error occurs during the commissioning of the burner; such as a “running interlock” opening or other lockout occurring; it is possible to continue commissioning from the last entered point. This is only possible so long as

i) The “HIGH FIRE” point has been entered,
ii) Power has been maintained to the system,
iii) The fuel selected has not changed.

On clearing the lockout error, the system will purge automatically and resumes commissioning from the last position. If power is lost to the Mini Mk7 EVO unit at any point in the commissioning process, all points; from the “CLOSE” and “OPEN” servomotor positions onwards; will have to be re-entered again.

2.18.8.2 Commissioning With The Quick Trim Function (Systems With An EGA)

Quick Trim is a new function on the Mini Mk7 EVO that has been added so that the burner can initially be commissioned quickly when using an EGA for combustion trim. The function allows the commissioning engineer to quickly enter a full combustion curve in situations where there is a low demand for heat or steam. Entering the fuel rich and air rich data for the combustion map can sometimes take too long. Single point changes can then be accessed at a later time to add trim to the curves. See Section2.18.8.3. Commissioning with Quick Trim is the same as normal commissioning with a few exceptions.

1. Before beginning commissioning ensure Parameter 74 is set to 1.

2. During commissioning, the MM will not invoke the auto commission time of 60 seconds either side of the commissioned point to build a combustion map. On completion of an entered point the MM will simply ask the commissioning engineer to go to the next point and continue to enter the fuel/air ratio paired values.

3. Single point change must be used to add trim to the points on the curve. While in single point change, re-entering the points on the curve will force the MM to sample fuel rich and air rich, adding combustion data to the previously commissioned data. This means that the combustion engineer can manage the plant load while the trim values are being store by entering the points in no set order.

2.18.8.3 Single Point Change

Single point change allow a combustion engineer to make adjustments to the fuel and air servo motor positions on the combustion curve. This can be useful in a number of situations, for example if i)adjustments are needed to optimise combustion efficiency or, ii) when commissioning burners on which no major load exists; in which case, single point changes can be used to adjust combustion points quickly to the desired positions. In order to make a single point change, the Mini Mk7 EVO unit must have the burner firing.

The following steps outline the procedure to make a single point change on the mini Mk7 EVO.

1. When the burner is firing, press the START AUTO and COM button simultaneously.

2. Enter the password by adjusting the numbers displayed using the buttons on the first and second rows. When the password has been entered, press the CLOSE ON/OFF button.

3. To select a point on the combustion curve to make a change to, use the buttons on the top row to move up and down the combustion curve until the selected fuel and air servomotor positions or point is shown on the Mini Mk7 EVO display screen. To modify the selected fuel/air servo motor position point, press the ENTER MEMORY button. If the combustion point selected is the lowest point on the combustion curve i.e. LOW FIRE, the START AUTO button LED will light, if the point is an inter combustion point the INTER LOW FLAME HOLD button LED will light and if the highest point i.e. HIGH fire, the HIGH HAND button LED will light.

5. To adjust the fuel and air servo motor positions, use the buttons on row 1, 2 and 3; corresponding to the channel 1, 2 and 3.

Note: A point on the combustion curve cannot be moved above a higher combustion point or below a lower combustion point with the exception of the HIGH fire and LOW fire combustion points which cannot be adjusted passed the commissioned "OPEN" and "CLOSED" servo motor positions

6. For single point changes **without** an Autoflame EGA Press the ENTER MEMORY button to store the new positions and the RUN button to exit single point mode.

7. For single point changes **with** an Autoflame EGA, after the fuel and air servo positions have been moved to their new positions the EGA can then be used to measure the exhaust gas concentrations of the new combustion point. This is achieved by pressing the M.M. E.G.A button and waiting 45 seconds; the default time the "ENTER" button is disabled for as set in Parameter 4. After this time, press the RUN button to begin EGA sampling. The EGA then samples for 60s, the default setting in Parameter 9, with the Mini Mk7 EVO reducing the air damper position, Channel 2, to take a fuel rich exhaust reading,

the

and

buttons LED's will flash during this time period. After 60s, or the time period specified in Parameter 9, a period of 25s, as default in Parameter 11, air taken to flush air through the EGA system. After this short time period, the Mini mk7 EVO adjusts the air damper position open, to allow the EGA to take an air rich exhaust reading. During the air rich sampling time the

button LED will remain lit and the

and

button L.E.Ds will flash.

8. Once a combustion position has been adjusted as required, the

and

button LEDs will flash. To adjust another combustion point, use the
buttons on the top row to move to the next combustion point and continue as described in step 3. To exit the single point change mode, press the

button.

Points to note regarding single point changes

i) Each single point change will be recorded on the Mini Mk7 EVO commissioning password screen as a "time commissioned".

ii) Each time a single point change is made, fuel flow metering has to be re-inputted into the Mini Mk7 EVO unit. This is especially important if the Mini Mk7 EVO is part of an IBS loop.

Only qualified combustion engineers should make single point changes. Changing the combustion curve has the potential to put the burner in an unsafe and inefficient state of operation.

2.18.8.4 Golden Start

This facility enables an alternative ignition position to be specified in the Mini Mk7 EVO that is not the low flame hold/start position. This feature is typically used on oil fuel as a method of specifying an optimal fuel/air servo motor position when the first slug of fuel has differing characteristics to the main body of fuel fluid i.e. it could be cooler and more viscous than the many fuel stocks.

Following the below step to enable the golden start function,

1. Enter Options mode and select Option 29. Change this from 1 (DISBALED) to 0 (ENABLED), the Option text should then read "GOLDEN START ENABLED".

2. Restart the Mini Mk7 EVO and enter commissioning mode by pressing the COM button as the unit starts up. Enter the password using the buttons on the first and second row and press CLOSE ON/OFF the button.

3. The "CLOSE" and "OPEN" positions then need to be specified. This must be done even if the Mini Mk7 EVO has been previously commissioned and the "CLOSE" and "OPEN" positions previously set. To enter the "CLOSE" position, wait until the burner motor starts then press the CLOSE ON/OFF button, adjust the valve positions to the "CLOSE" position and press the ENTER MEMORY button. To then set the "OPEN" position, press the OPEN LEAD BOILER button adjust the valve positions to the "OPEN" position and press the ENTER MEMORY button.

4. After a period of time, the Mini Mk7 EVO will request a "START" position to light the burner. This point is not stored but instead is used to start combustion across the burner. To enter this point, press the START AUTO button and adjust the servo motor positions to a "START" position and press the ENTER MEMORY button.

5. The Mini Mk7 EVO unit will then display "ENTER GOLDEN START". To enter this point, press the START AUTO button, adjust the valve positions to the chosen Golden Start position and press ENTER MEMORY to store the position.

6. After entering the Golden Start position, the HIGH HAND button LED will flash and the unit will be expecting a "HIGH FIRE" fuel/air position to be entered. If the Mini Mk7 EVO unit is being commissioned for the first time, continue commissioning as standard as outlined in Section2.18.8. If a Golden Start position is being added to a Mini Mk7 EVO unit that has already been commissioned, after entering Golden Start position restart the unit.

7. The Mini Mk7 EVO will then modulate to the specified Golden Start position for a period of time defined in Parameter 15, default value of 5s. This time period includes the ignition time as specified in Option/Parameter 115.

2.18.8.5 Flue Gas Recirculation

Flue Gas Recirculation (FGR) involves feeding a controlled amount of exhaust gas from the combustion process, approximately 0-15%, back into the burner - exhaust gases are typically pre-mixed with air to be inputted from the burner fan. By controlling the amount of combustion exhaust gas fed back into the burner the flame temperature can be reduced by a controlled amount which in turn restricts the production of NOx gases. In this section, how to set up FGR valve positions and the choices a combustion engineer has in the Mini Mk7 EVO system setup are outlined.

2.18.8.5.1 FGR Start Position Choices

Three FGR settings exist on the mini Mk7 EVO. All three or only one can be set, depending on the process involved. The three FGR settings are setup in Options 48 - 50, these are a follows

Option 48: **FGR Timer** - the FGR valve and fuel/air servomotor position are held at a defined "FGR START POSITION" prior to being released to modulate normally.

Option 49: **FGR Offset** - The FGR valve is shut until the offset between measured temperature/pressure and actual temperature/pressure is reached, as defined in Option #49.

Option 50: **FGR Flue Gas Temperature** - The FGR valve is shut until the temperature of the exhaust gas reaches 1200C (2480F). An Autoflame EGA must be connected and optioned in on the Mini Mk7 EVO.

2.18.8.5.2 FGR Considerations

To setup the Mini Mk7 EVO for F.G.R. use, channels 3 and 4 are the default servomotor and VSD channels. The Channel 3 servomotor is enabled by setting Option 8 such that the channels 1,2 and 3 are enabled. If a VSD is to be used, enable the VSD Channel 4 through Option 90. Ensure that all the settings specific to the VSD are correctly set in Options 91 to 97. **Note** If at any time Option 8 or Option 90 is changed, the Mini Mk7 EVO system will have to be re-commissioned.

Enabling FGR on a Mini Mk7 EVO does not interfere with other ignition specific options such as the Golden Start utility. This can be set as normal in Option 29 and Parameter 15. If a Golden Start is ENABLED on a Mini Mk7 EVO system on which FGR is also setup, the Golden Start will occur prior to the FGR position.

When setting up FGR positions using the Channel 3 servomotor, Option 69 can be used to define the Channel 3 valve position when the Mini Mk7 EVO is in purge. Having the Channel 3 servomotor set to "CLOSED" on purge will restrict the flow of back around and through the burner.

2.18.8.6 Fuel Flow Metering

Fuel flow metering is enabled by setting Option 57 =1 or ENABLED. Fuel flow metering is required for a number of applications controlled by the Mini Mk7 EVO, such as totalising fuel flows and IBS, and must be setup correctly to enable the display of firing rate on the display screen of the Mini Mk7 EVO. There are two methods of implementing fuel flow metering which differ only in the accuracy of fuel flow measurements required to be displayed on unit. The following steps need to be taken in order to set up fuel flow metering correctly,

1. Enter Options and set Option 57 = 1 or ENABLED. To re-implement fuel flow metering on systems where fuel flow metering has previously been setup, reset Option 57 = 0 or DISABLED, restart the Mini Mk7 EVO system and set Option 57 = 1 or ENABLED. Press the

button to restart the system.

2. The next time there is a "CALL FOR HEAT" on Terminal 53, after the Mini Mk7 EVO system has proceeded through its start up sequence, ten fuel flow values will be made by the unit.

WARNING: The first point out of the ten fuel flow values will be the "HIGH FIRE" point i.e. the highest point on the combustion curve. Precautions must be taken in order to ensure the boiler is warm enough for all ten points to be entered.

Flow values units are defined for Fuel 1/2 in Options 61/62 being inputted in one of two ways

i) If an accurate measure of the totalised fuel flow into the burner is not required, each value for the flow value can be attributed a value from ten to one. This will then provide the Mini Mk7 EVO enough information to then display a firing rate.

ii) If an accurate measure of the totalised fuel flow into the burner is required, a fuel flow meter can be used to measure the flow of fuel into the burner per minute at each of the ten points. This method of inputting the fuel flow metering will give an accurate measure of the amount of fuel of used over the firing range.

3. To input a fuel flow value, the buttons on each row adjust the flow value differently. The first row changes the value of the 10's column, the second row down changes the 1's column units, the third row changes the 0.1's column units and the fourth row down changes the 0.01 column units.

After inputting each flow valve press the

button. The Mini Mk7 EVO will then adjust the fuel channel servomotor position down to the next point, at which the next flow value should be entered. Continue this procedure until all ten fuel flow values have been entered.

4. After the tenth flow value has been entered, the Mini Mk7 EVO will modulate normally. In order to check that a firing rate is displayed, press the 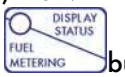

button once. The firing rate is displayed below the fuel type and above the required/actual load. Pressing the 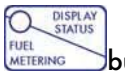

button a second time displays the flow rate per minute (as specified) and the total flow counted.

2.18.9 FLAME SAFEGUARD

2.18.9.1 Introduction

The term "Flame Safeguard" refers to the device or devices used to monitor the quality and state of the combustion flame. This is achieved by the Mini Mk7 EVO by measuring either the intensity of an Infra Red (IR), Ultra Violet (UV) or Flame Rod signal from the flame - a combination of these signals can be used on the Mini Mk7 EVO system as explained below. If a flame signal is detected when no flame signal is expected by the system e.g. during the purge start-up sequence; or a flame signal is not detected when a flame signal is expected e.g. the flame blows out during firing, a burner lockout will be triggered.

2.18.9.1.1 Flame Safeguard Setup

In Option/Parameter 122, the type of flame safeguard sensor is specified depending on the application and/or type of fuel used in the combustion process, the Mini Mk7 EVO has the ability to use the following flame safeguard sensors,

- IR sensor
- UV sensor
- UV self-check sensor
- Ionisation flame rod
- IR sensor and UV / UV self-check senor
- IR sensor and Ionisation flame rod

2.18.9.1.2 Lockout Considerations

A burner lockout can be reset by either,

i) The main lockout reset input on Terminal #79 being made for 2 seconds.

ii) Holding the

button for 2 seconds.

2.18.9.1.3 Flame Safeguard Operation

In the following sections, a number of diagrams illustrating how Interrupted Pilot, Intermittent Pilot, Lockout states and Post Burner Operation VPS operate are given. If the VPS is not selected on the fuel being used the VPS phases are bypassed. With regards to the following diagrams, the notes below apply:

Point Idle:	This phase is set at power up when no fuel is selected on exit from lockout.
Point Recycle:	This phase is set on exit from firing and post purge is VPS has not operated after the burner has run.
Point Post Purge:	This phase is set only if post purge is optioned.
Point Standby:	This phase is set if VPS has operated after burner run.

Blue waveforms in the following illustrations indicate required conditions.

2.18.9.2 Interrupted Pilot

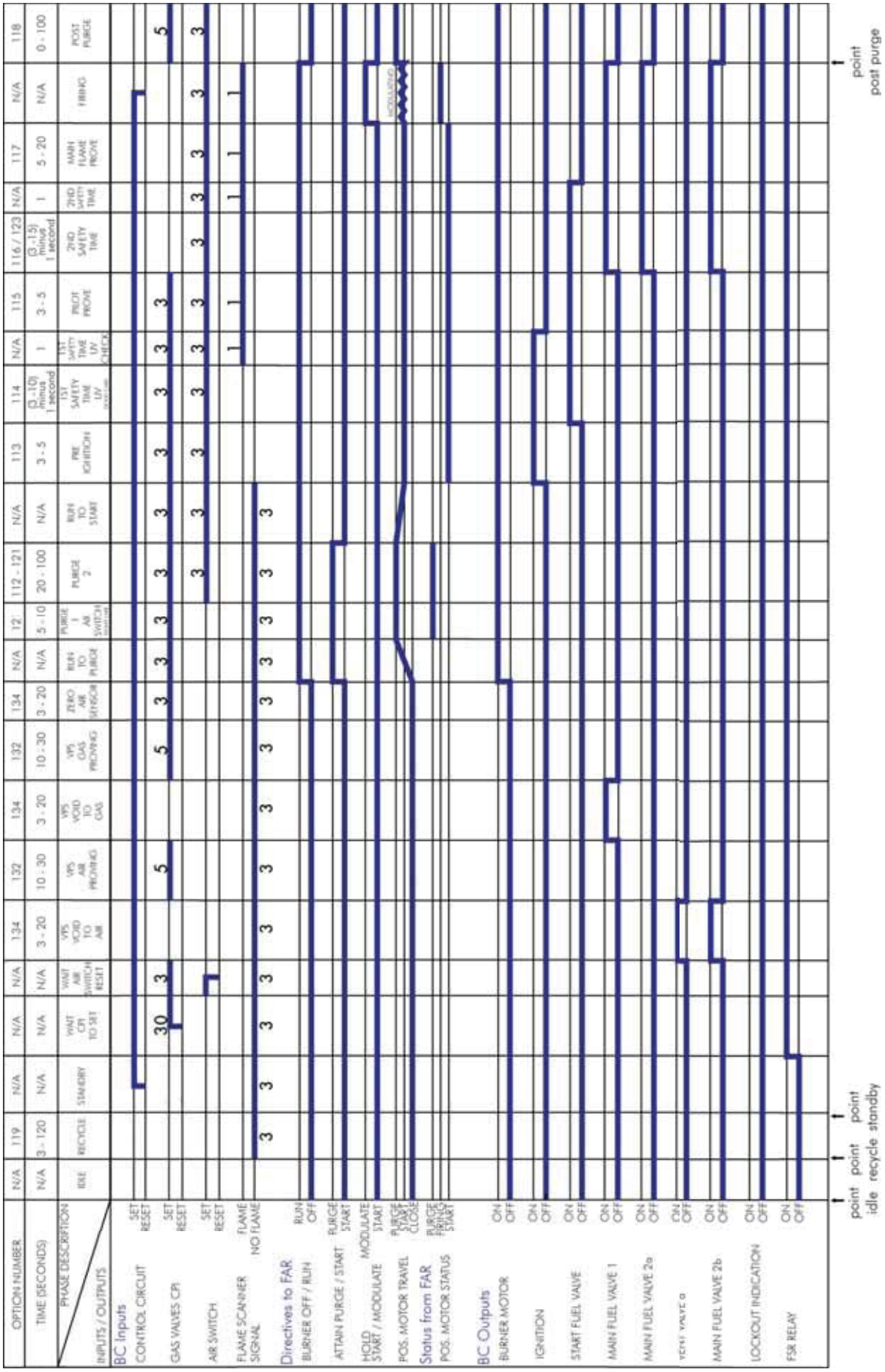

2.18.9.3 Intermittent Pilot

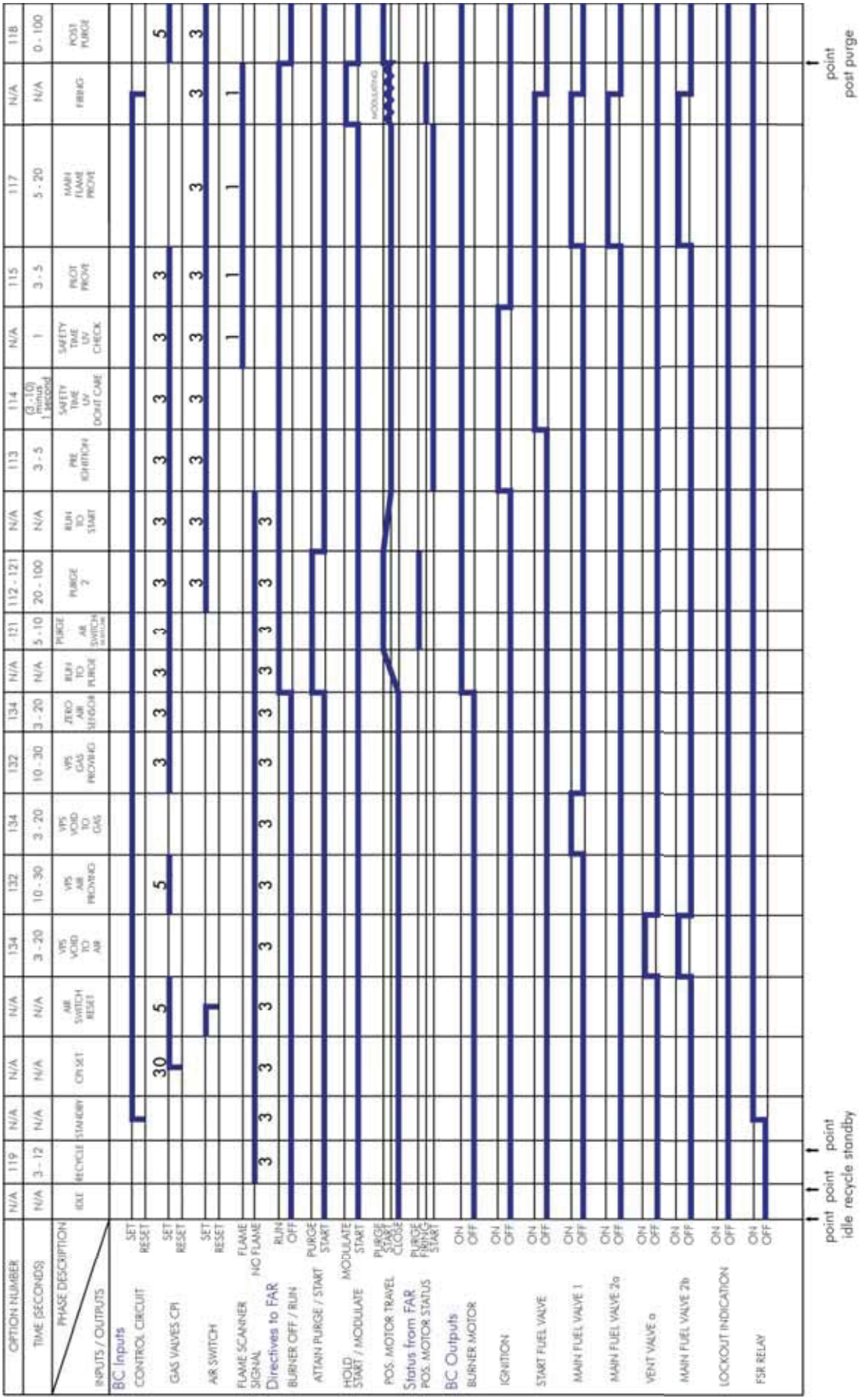

2.18.9.4 Lockout

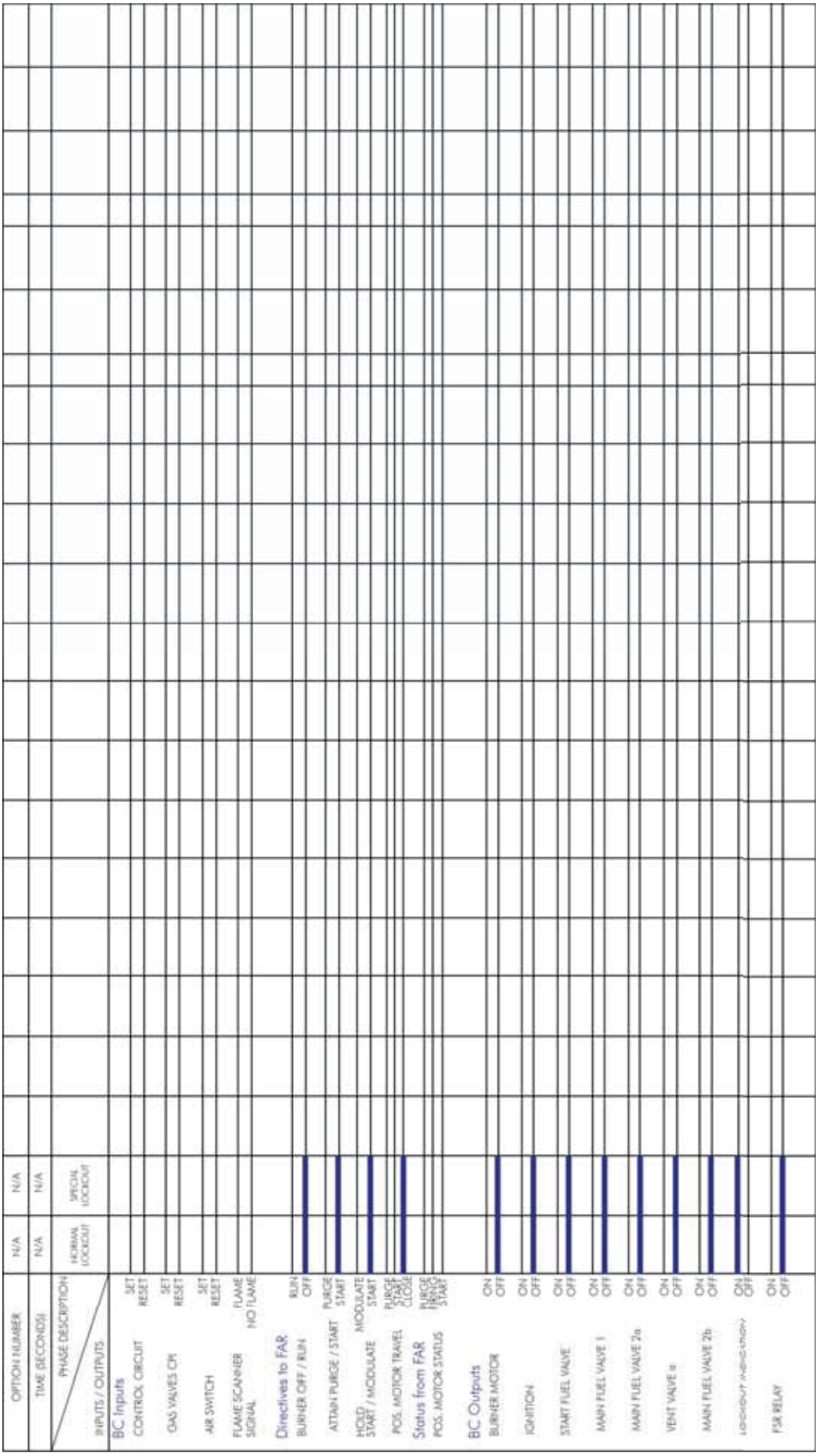

2.18.9.5 Post Burner Operation VPS

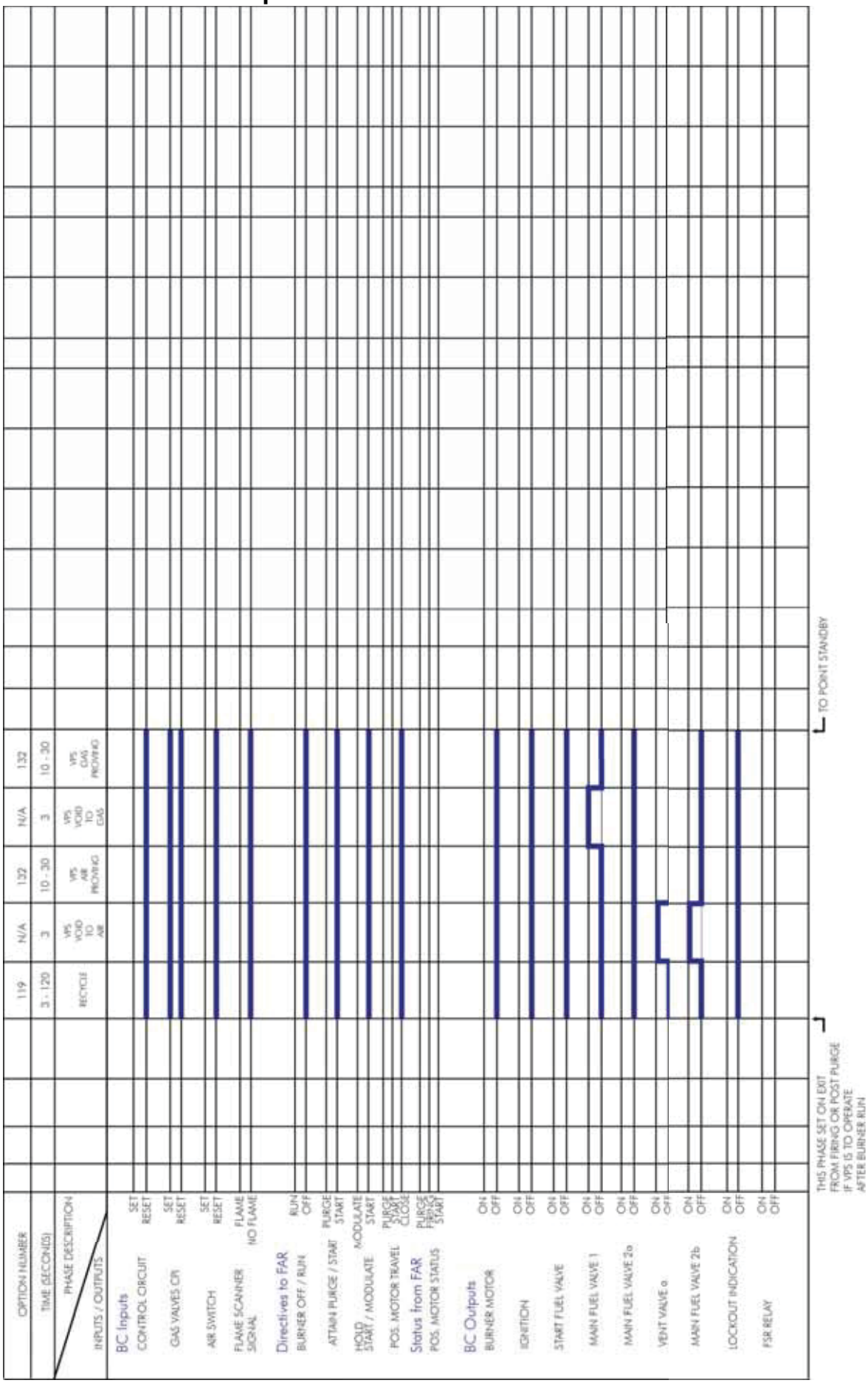

2.18.9.6 Self Check UV Scanner

Part Numbers: MM 60003/HS

Maximum Operating Temperature - 50°C / 122°F

Connections	
Red	Terminal 51
Blue	Terminal 50
Screen	Terminal S
Yellow	Terminal 21
Green	Terminal 22

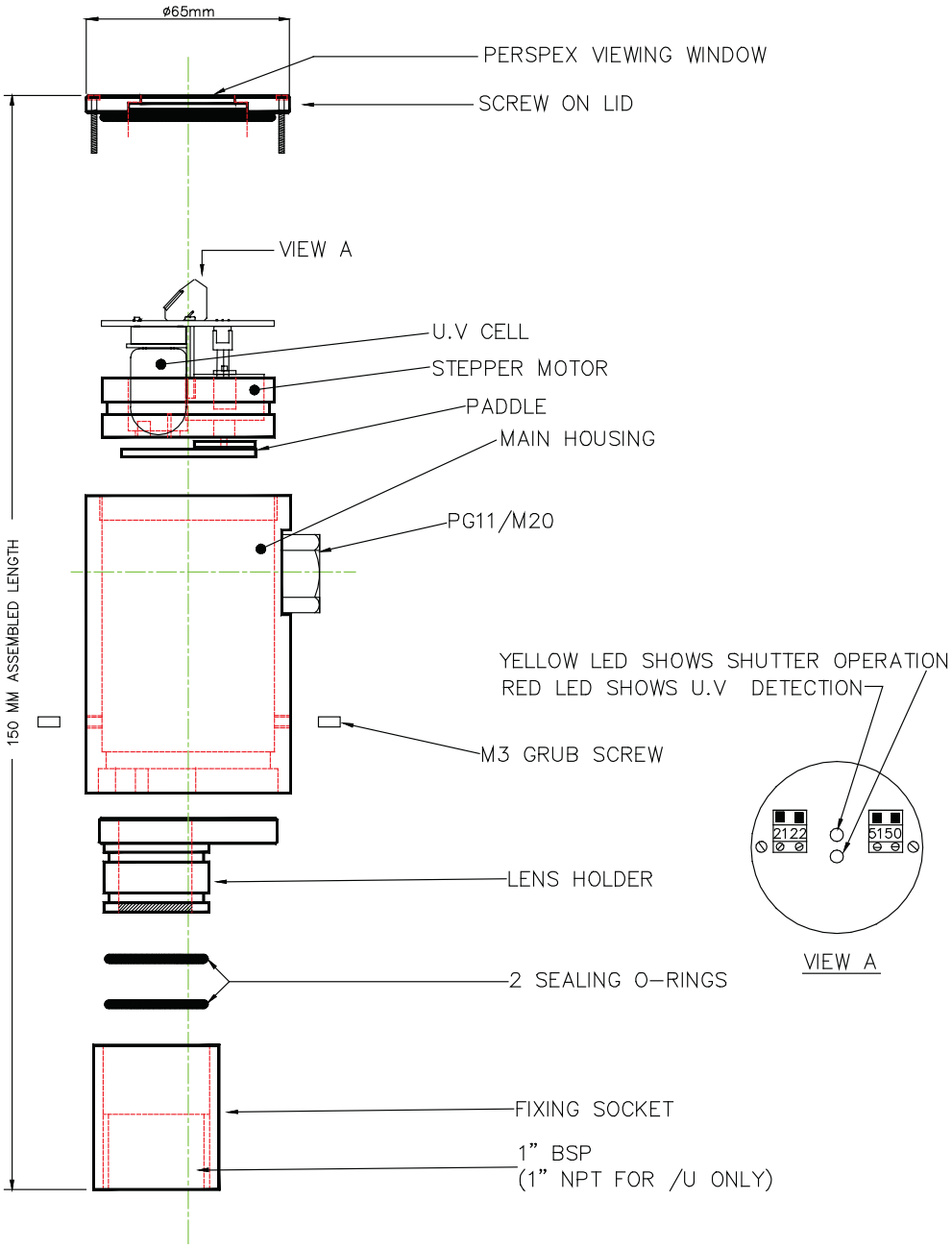

NOTE:

I.P. RATING	54
N.E.M.A.	5
POWER CONSUMPTION	MAX 0.5W
HOUSING	ALUMINIUM
MOUNTING	ANY ORIENTATION

2.18.9.7 Self Check Side View UV Scanner

Part number: MM60003/HS/SV

Maximum operating temperature - 50°C / 122°F

Connections	
Red	Terminal 51
Blue	Terminal 50
Screen	Terminal S
Yellow	Terminal 21
Green	Terminal 22

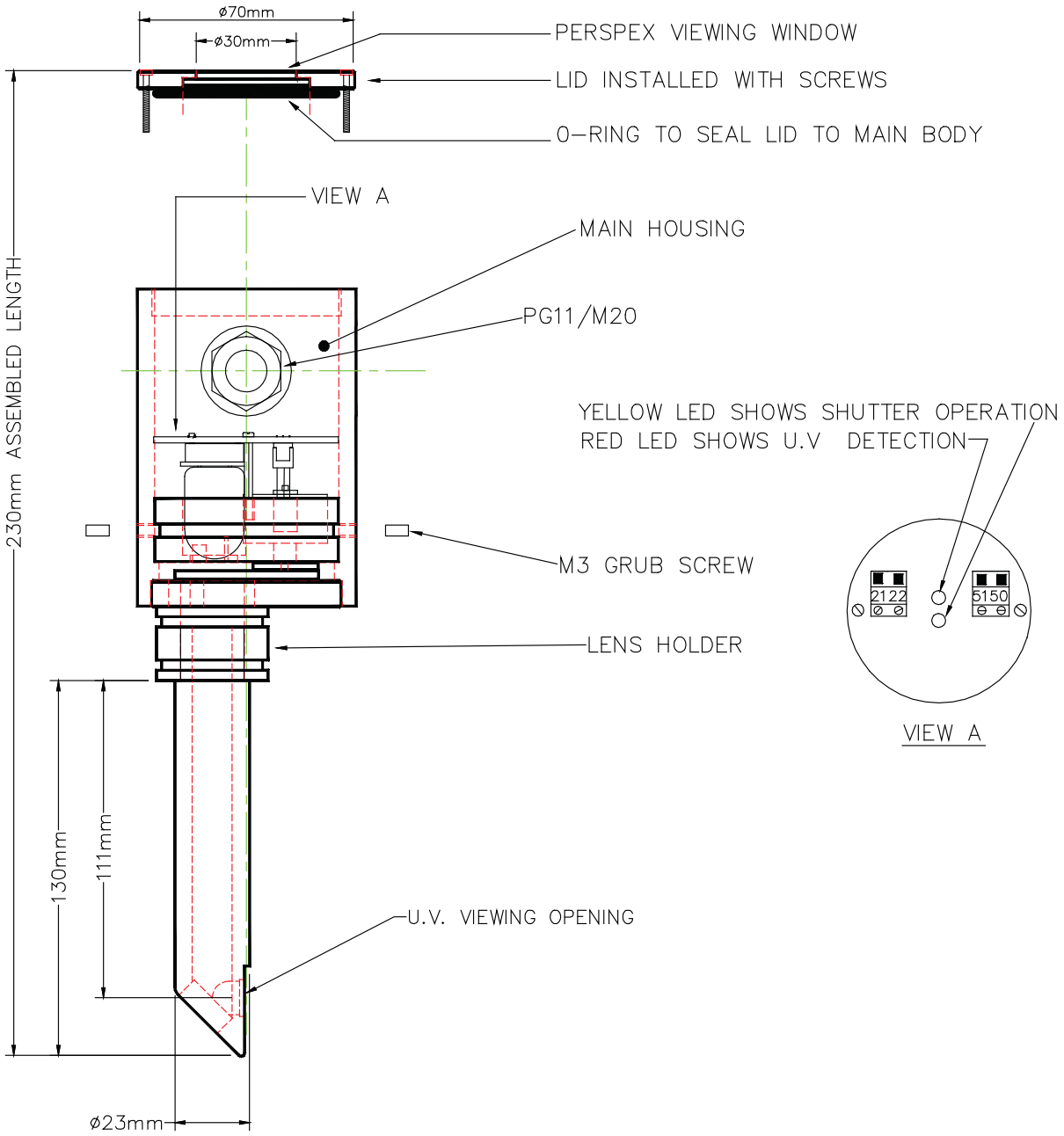

NOTE:

I.P. RATING	54
NEMA	5
POWER CONSUMPTION	MAX. 0.5W
HOUSING & LID	ALUMINIUM
UV CELL	HIGH INTENSITY

2.18.9.8 Standard European Side Viewing UV Scanner

MM 60004

Maximum Operating Temperature - 60°C / 140°F

Connections	
Red	Terminal 51
Blue	Terminal 50
Screen	Terminal S

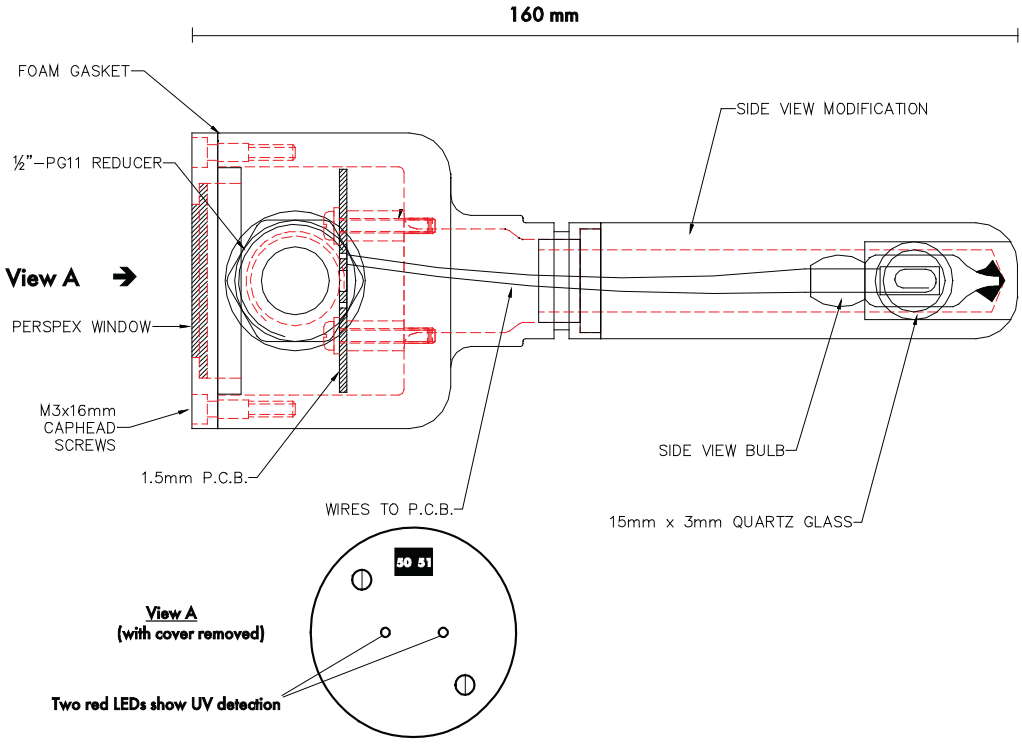

Note: If wired incorrectly a limited UV signal will be detected but the LED will not illuminate.

IP	54
NEMA	5
HOUSING	ALUMINIUM
POWER CONSUMPTION	POWERED BY MM
MOUNTING	ANY ORIENTATION SO THAT PHOTO TUBE FACES THE FLAME

2.18.9.9 Standard North Amercian End View UV Scanner

Part numbers: MM60004/U
MM60004/HSU

Maximum operating temperature - 60°C / 140°F

Connections	
Red	Terminal 51
Blue	Terminal 50
Screen	Terminal S

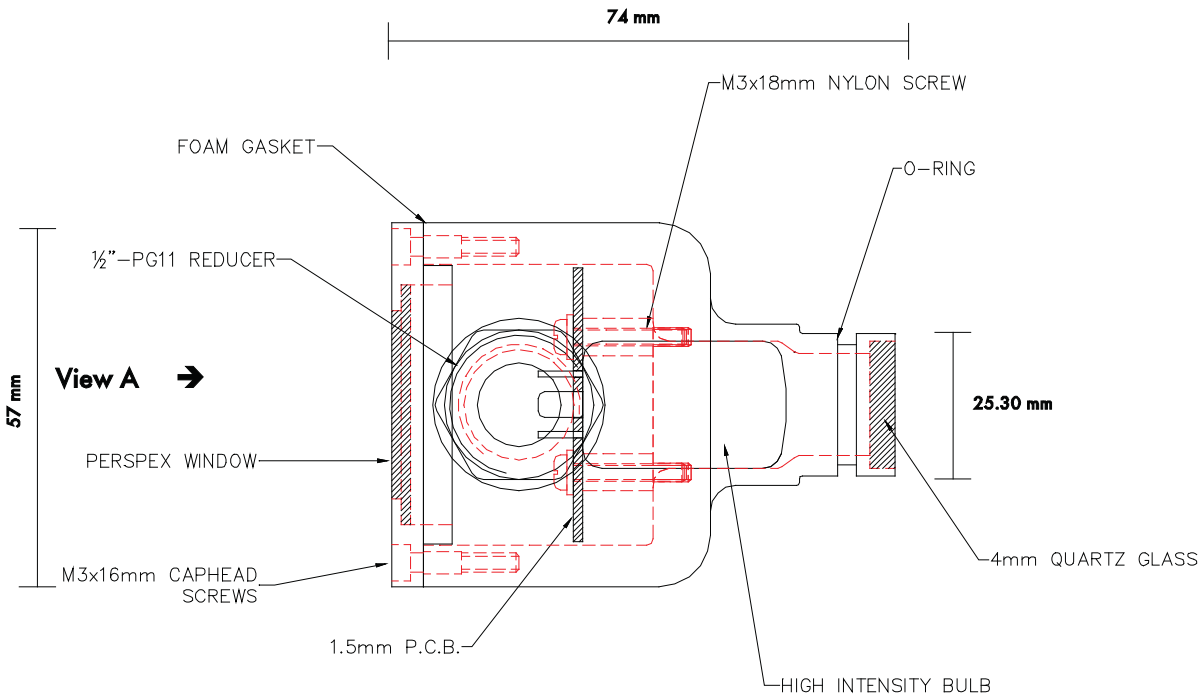

View A
(with cover removed)

Note: If wired incorrectly a limited U.V. signal will be detected but the L.E.D. will not illuminate.

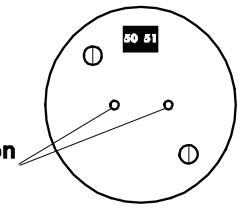

Two red LEDs show UV detection

NOTE:

I.P. RATING	54
NEMA	5
HOUSING	ALUMINIUM
POWER CONSUMPTION	POWERED BY MK.7 MM
MOUNTING	ANY ORIENTATION SO THAT PHOTO TUBE FACES FLAME

2.18.9.10 Selection of UV Scanner Types

2.18.9.10.1 Normal Sensitivity

If the distance from the UV scanner to the flame is 500mm (20 inches), the normal sensitivity or UV scanner types may be used.

Normal Sensitivity Scanner Types

MM 60004	Standard Side View
MM 60004/U	Standard End View

The following considerations must be kept in mind when selecting a UV scanner,

- Flame size
- Flame shape (dependent on the burner used)
- Flame intensity (a function of flame size and shape and fuel used)
- Flame obstructions

When the signal strength is low, a high sensitivity scanner type might be necessary for distances above 20 inches.

2.18.9.10.2 High Sensitivity

If the distance from the UV scanner to the flame exceeds 500mm (20 inches) a high sensitivity UV scanner type is recommended.

High Sensitivity Scanner Types

MM 60003/HS	Self Check End View
MM 60003/HS/SV	Self Check Side View
MM 60004/HS	Standard Side View
MM 60004/HSU	Standard End View

The maximum safe distance a UV scanner can be from a flame is dependent on

- The intensity of UV radiation emitted from the main flame and pilot flame
- The geometry of the combustion chamber and available space

This will vary between applications but the maximum distance allowed is 1500mm (6 ft) between a high sensitivity scanner and flame.

Note:

The above information is based on the results of tests conducted using a laboratory pilot flame supplied from a Bunsen burner of flame size 100x20mm.

2.18.9.11 UV Self Adaptive Pulse Width Modulation

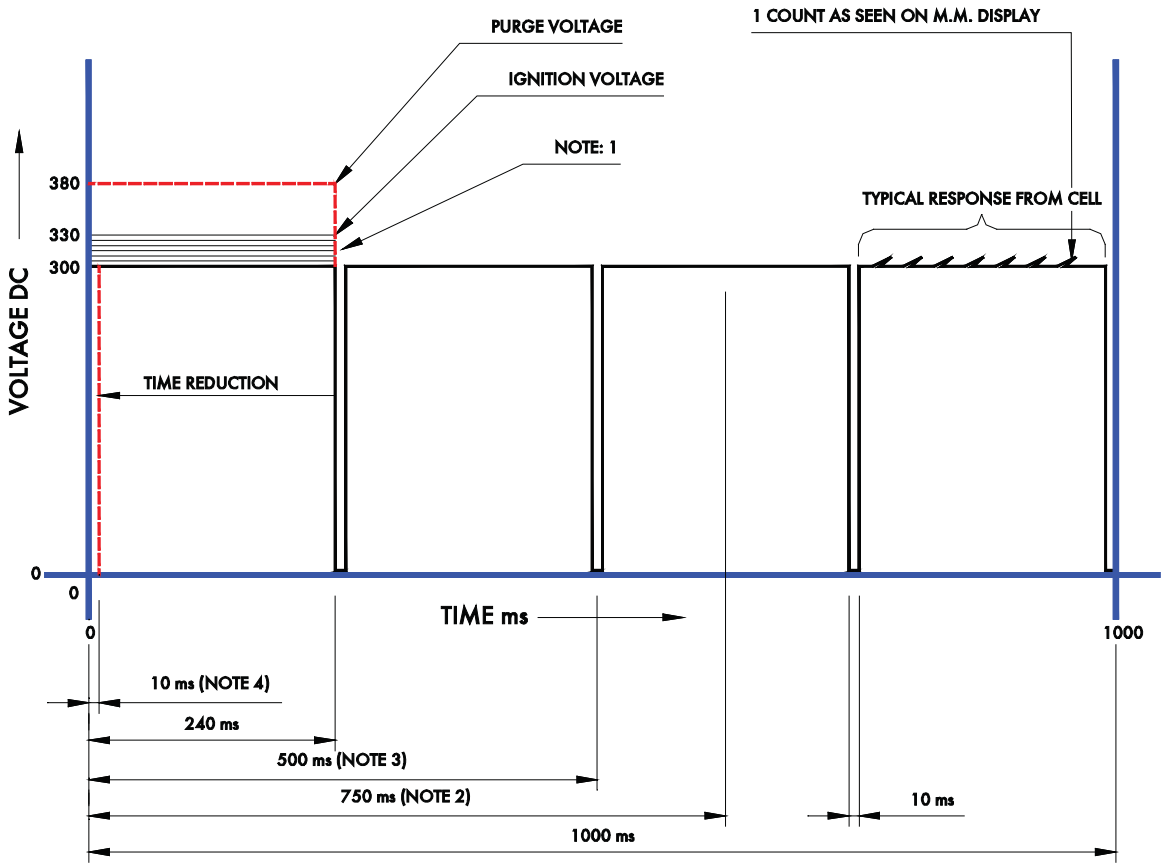

NOTE 1:
After first safety time voltage is reduced by 5 volts every 500ms. This is providing the flame signal is above the U.V. setpoint. If below the U.V. threshold, voltage will remain at 330 volts. The voltage will not increase during main flame operation.

NOTE 2:
If 5 counts or less have been detected over any 730ms period, the system will invoke a lockout. A short circuit between the two wires connected to the U.V. would produce 3 counts or less. This is the reason for nominating 5 counts as the lockout level.

NOTE 3:
During normal operation, 300 volts would be applied for a 240ms period after the second safety time. This is providing the U.V. signal is above the U.V. setpoint which is set at 25 counts. The setpoint cannot be adjusted.

NOTE 4:
When the signal is above the U.V. setpoint, the time voltage applied to the cell is reduced by 1ms every 500ms. The time would continue to reduce until a minimum of 10ms has been reached. At this stage no further time is deducted from the voltage applied to the cell.

NOTE 5:
Every 500ms the recorded counts are averaged and displayed on the MM screen.

2.18.9.12 IR Self Check End View Scanner

Part Number : MM 70017/MINI (For use with the Mini Mk7 with relay and power supply)

Maximum Operating Temperature - 60°C / 140°F

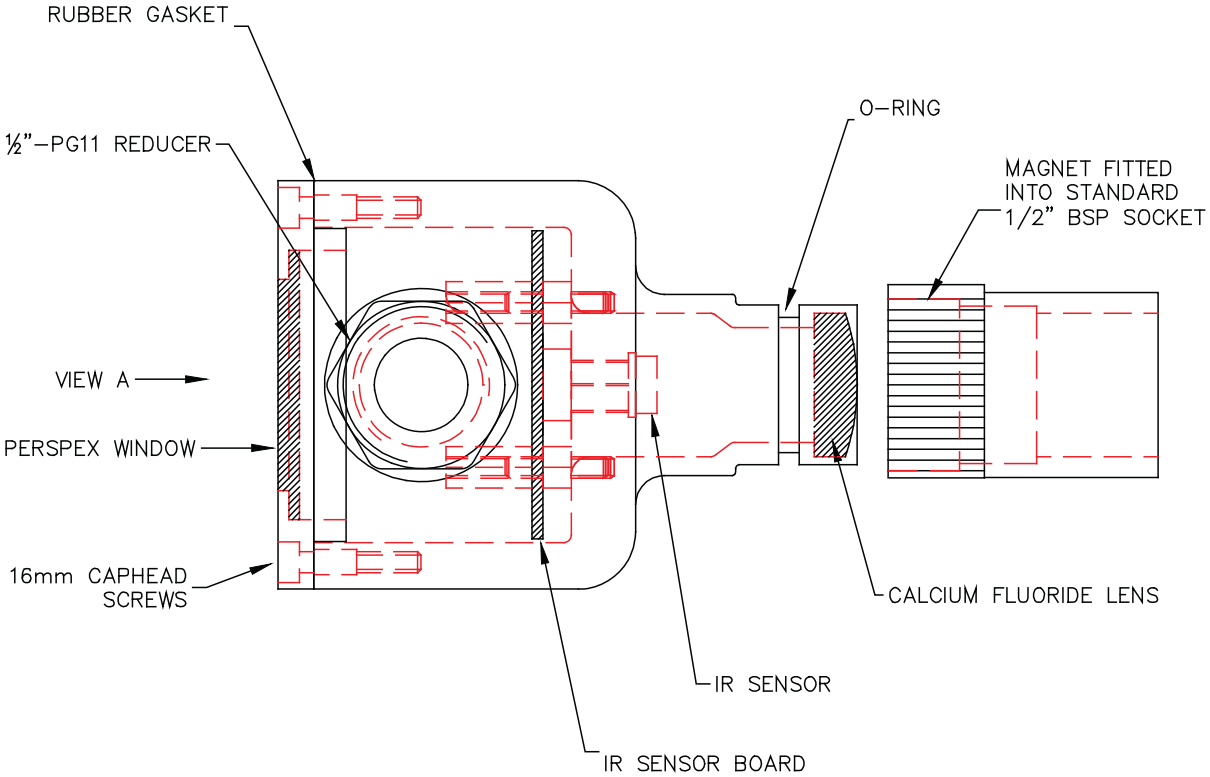

VIEW A

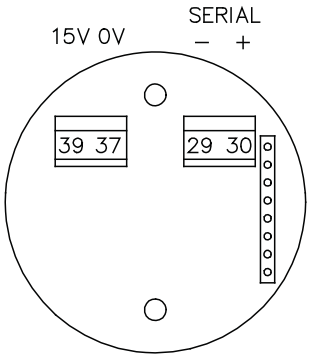

IR SENSOR BOARD

IP RATING	54
NEMA	5
HOUSING	ALUMINIUM
POWER CONSUMPTION	POWERED BY EXTERNAL 15V DC SUPPLY
MOUNTING	ANY ORIENTATION SO THAT PHOTO TUBE FACES FLAME

2.18.10 THE PID CONTROLLER

2.18.10.1 Introduction

The standard control algorithm used by Autoflame to control the fuel/air ratio is a PID controller; Proportional-Integral-Derivative controller. The control algorithm compares the actual measured temperature or pressure and compares it to the user specified setpoint temperature or pressure. Depending on the measured and setpoint values, the controller will then either modulate the burner up (increase) or down (decrease). The rate of change or speed of the burner modulation in relation to changes in measured temperature or pressure is dependent on the settings of the PID controller as stated in the Options and Parameters sections.

The PID controller action is the sum of the "Proportional" + "Integral" + "Derivative" actions of the PID controller. Each contributes to how the controller modulates the burner and each operates as outlined below.

2.18.10.2 Proportional Band

The Proportional term is specified in Option 6 by defining the "Proportional band" (P.B.). The P.B. is simply an offset from the setpoint pressure or temperature. Outside and below the P.B., the controller will modulate the burner at maximum flame, upon reaching the P.B., the controller will modulate the burner linearly down (see Option 6).

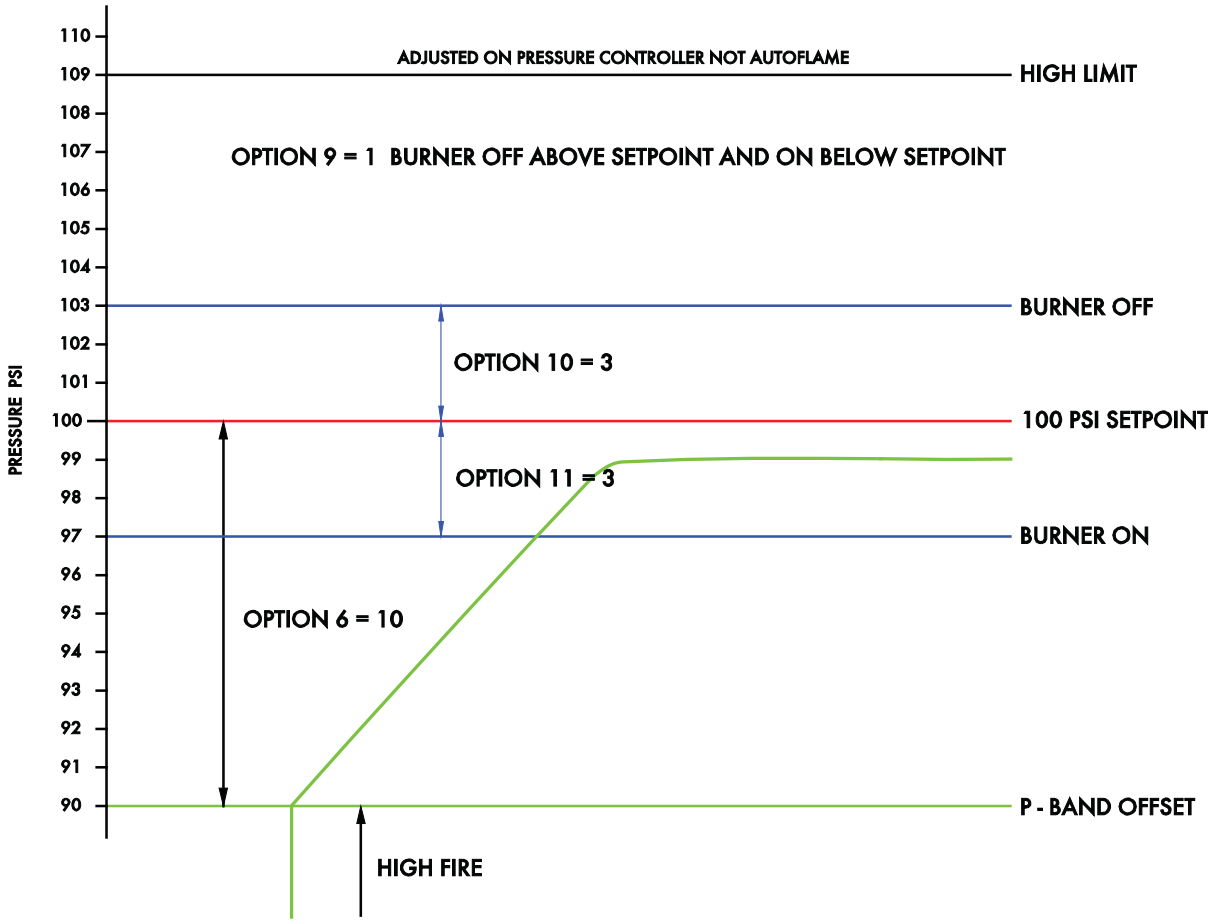

2.18.10.3 Integral Control

The Integral term is specified in Option 7, where the "Integral time", also known as "Reset time", is set. Within the Proportional Band, the integral term has the effect of increasing or decreasing the burner by a specific amount every "n" seconds. The amount the firing rate is adjust by is specified in Parameter 106, default is 10% of the difference between the measured and setpoint temperature or pressure values, and the time period this amount is added; every "n" seconds; "n" is specified in Option 7, default is 60s.

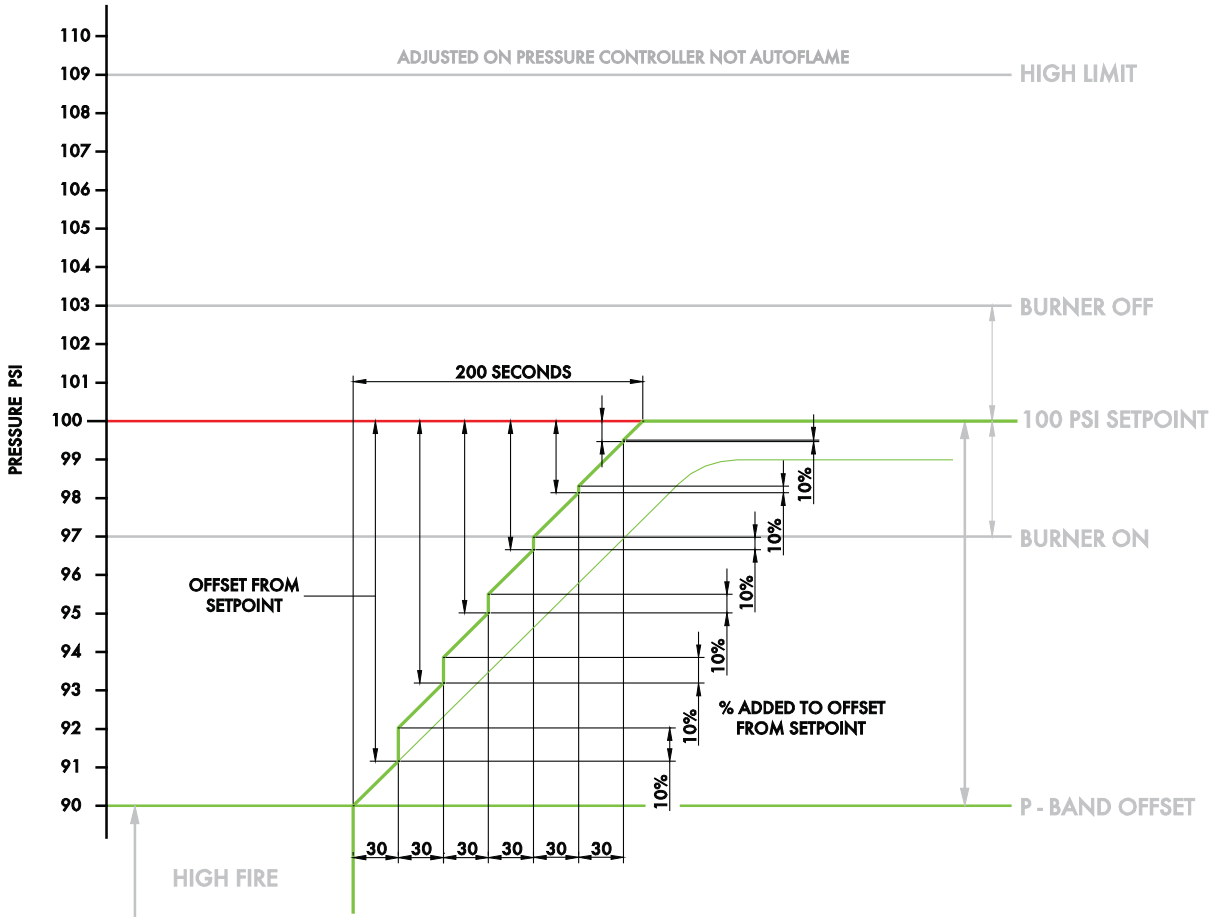

OPTION 7 = 30 SECONDS INTERGRAL TIME
PARAMETER 106 = 10% AMOUNT OF ADDED OFFSET

2.18.10.4 Dervivative Control

The Derivative term of the control system analyses the rate of change in the difference between the measured and set point temperature or pressure. Derivative specific options are set in Option 37, 38 and 39. The time interval over which the compared and measured temperature or pressure values are taken is set in Option 37, the derivative dead-band or margin above and below the required set point in which no derivative action occurs is set in Option 38, and the response sensitivity as a percentage of firing rate increase or decrease is defined in Option 39.

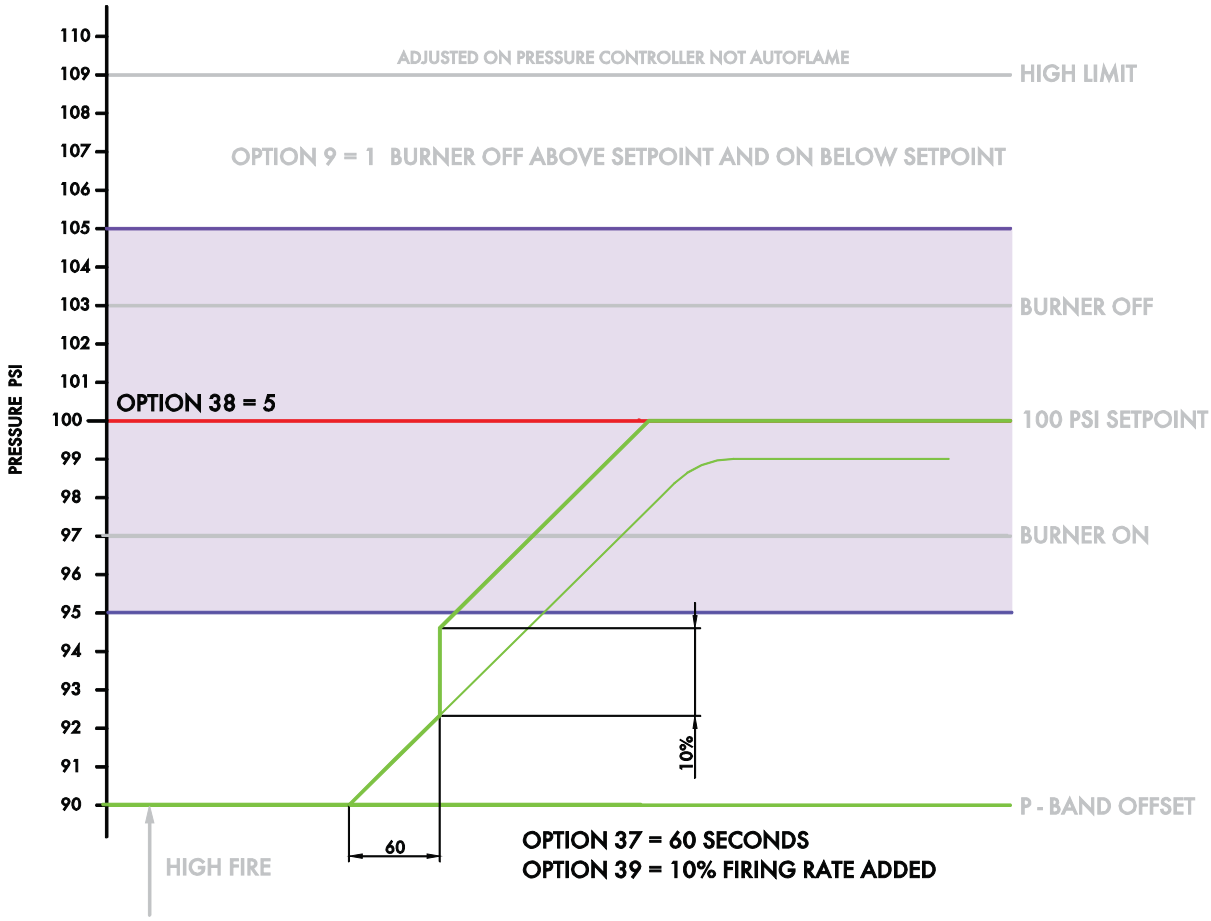

NOTE: The derivative action occurs at all points outside of the deadband. This includes outside of the proportional band.

2.18.10.5 PID Controller Considerations

The majority of applications can be controlled adequately using just the Proportional and Integral settings; a PI control setup. By default, the Derivative term is set to zero. This is due, in part, to the aggressive nature this term can have on the control action which makes it suited to a small number of combustion processes.

Modification to the settings governing the Autoflame control system should only ever be carried out by qualified combustion engineers. Changes to the Autoflame control system setup has the potential to make the controller operate in an unstable and potentially unsafe manner.

2.18.11 EXTERNAL MODULATION

The Mini Mk7 EVO is capable of being modulated externally by a separate control system or Building Management System (B.M.S.). The following wiring and specific Options must be set for this function to work correctly. An external 0-10V input is required on Terminals 37 and 38, as shown in Figure 2.18.11. The Mini Mk7 EVO terminals are usually used for the boiler pressure sensors or temperature sensors, therefore it is assumed the external controller has a method of measuring the boiler pressure/temperature.

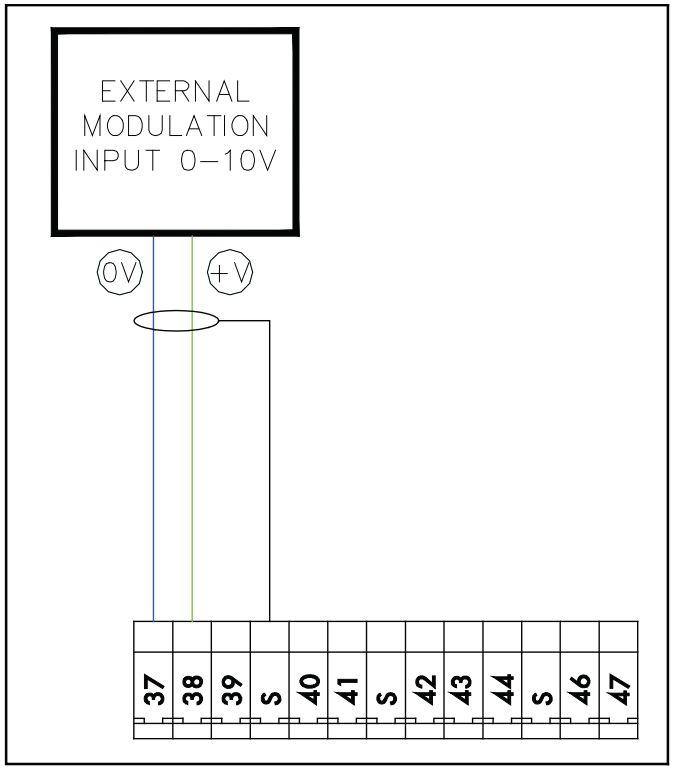

Figure 2.18.11 Wiring set up to externally modulate the Mini Mk7 EVO.

In addition to the wiring in Figure 2.18.11, and a 0-10V input, a working stat must be fitted to the boiler and wired in between a live and Terminal 53.

To enable external modulation, the following Options must be set in the Mini Mk7 EVO unit:

Option 45 - **External Modulation**
In this Option, External Modulation is "ENABLED" or "DISABLED".

Option 9 - **Internal Stat Operation**
If External Modulation is being used in parallel with the Mini Mk7 EVO, Option 9 must be set to 0.

Option 57 - **Fuel Flow Metering**
Fuel Flow Metering must be optioned and setup correctly on the Mini Mk7 EVO system.

Note: It is necessary to use a signal isolator to prevent any excessive voltages being applied to Terminals 37 and 38. The signal isolator used must have the following characteristics:

Signal Isolation Voltage	3.75 kV
Creepaged	5 mm
Clearance	4 mm
Rating of Equipment and Cables Housing	IP 55

2.18.12 PROVING VALVES AND END SWITCH SETUP

The Mini Mk7 EVO has the ability to used Proving Valves (also known as End Switches or End Limit Switches). Such switches provide a secondary confirmation that a valve has reached a predefined position. In order to provide this secondary check, a bespoke valve for the process application has to be made onto which the End Limit Switch can be attached, shown in Figure 2.18.12.i

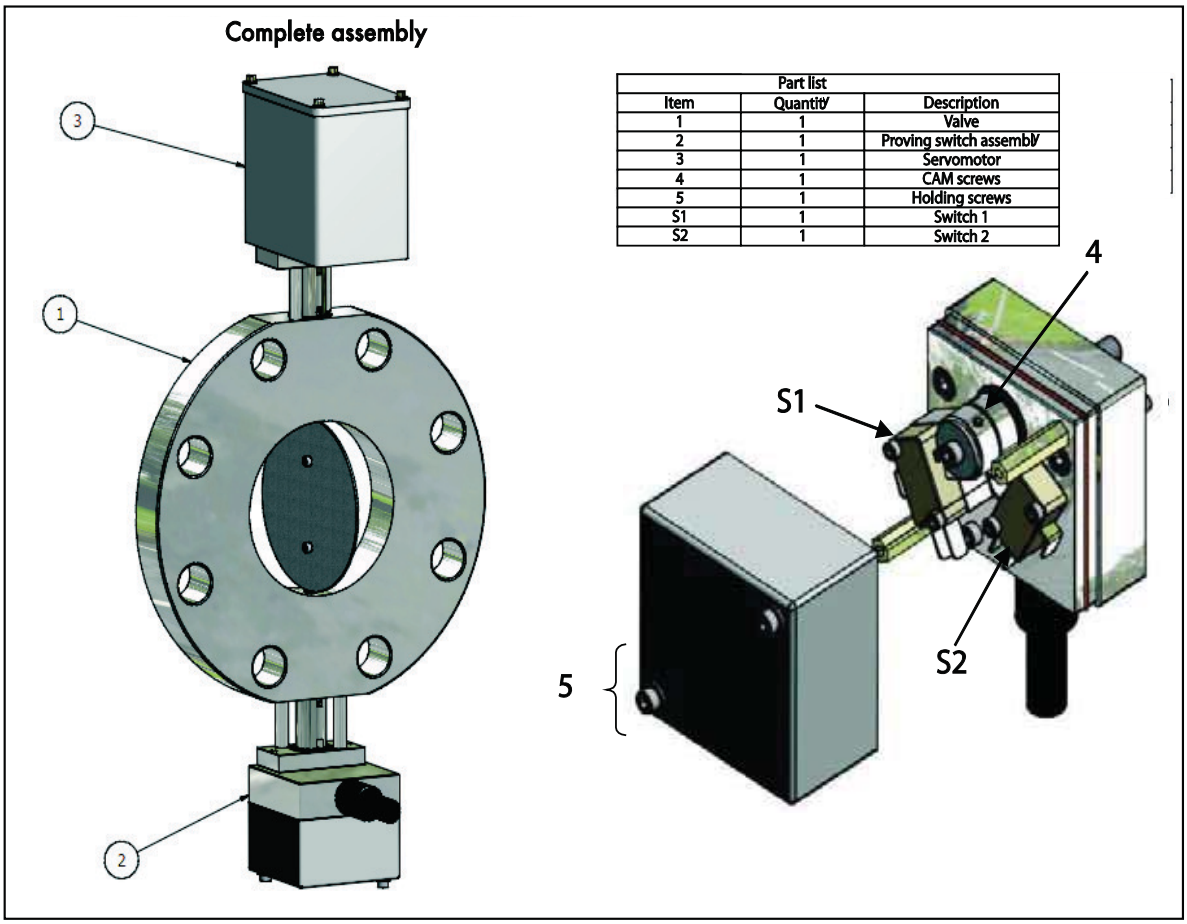

Part list		
Item	Quantity	Description
1	1	Valve
2	1	Proving switch assembly
3	1	Servomotor
4	1	CAM screws
5	1	Holding screws
S1	1	Switch 1
S2	1	Switch 2

Figure 2.18.12.i End Switch Setup

To install the End Limit Switches,

1. Mount the servomotor onto the valve and ensure the potentiometer reads the correct position on the Mini Mk7 EVO display for the "CLOSED" and "OPEN" valve positions.

2. Mount the End Switch Proving Unit (E.S.P.U.), shown in Figure 2.18.12.i. The servomotor may have to be moved to a suitable position in order to allow the E.S.P.U. to be attached to the valve.

3. Undo the End Limit Switch holding screws.

4. Adjust the position of CAM corresponding to switches 1 (S1) and 2 (S2) by loosening the CAM screws and move to the required position.

5. Wire the ESPU according to the Valve Proving the End Limit Switch will be required to provide. See the End Limit Switch wiring diagram in Figure 2.18.12.ii

Note: The use of these switches is determined by the application approval necessary. These are not required to meet UL, FM or CE.

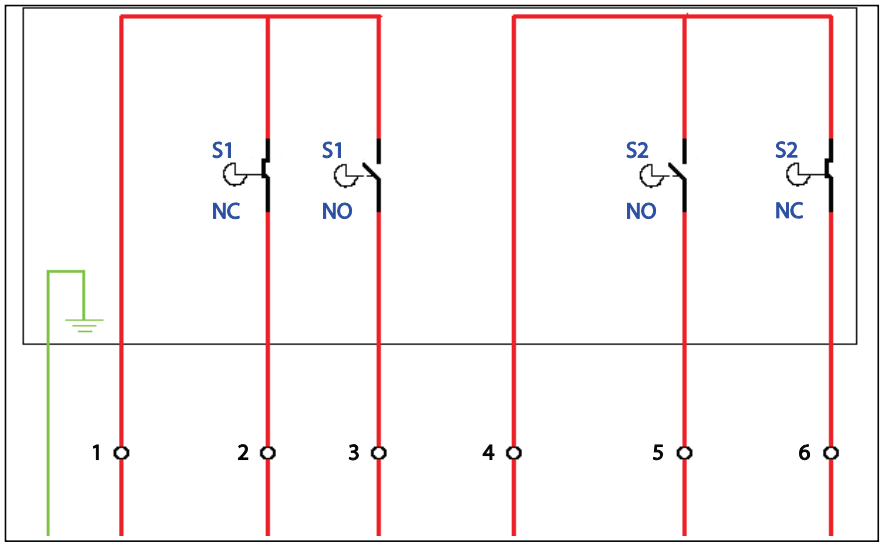

Figure 2.18.12.ii End Switch wiring schematic

End Limit Switches are mounted on the end of bespoke valves (please contact Autoflame regarding bespoke valve manufacture) which are attached to the air and fuel valve and commissioned depending on the use of the End Limit Switches.

An End Limit Switch comprises of two switches, as depicted in Figure 2.18.12.i. Each comprises of an Earth and 6 connections to be wired as appropriate.

With respect to End Switch use on using the Mini Mk7 EVO unit, the switches S1 and S2 are setup as per on site specification. These are then wired into either or both of the Terminals 80, the Low Fire Interlock, and Terminal 81 High Purge Interlock. In Option/Parameter 124, the End Switch use is specified, these are specific to the Mini Mk7 EVO in the following table.

Option/Parameter #124	Terminal 80	Terminal 81
0	Input Disabled	Input Disabled
1	Input Disabled	**Open Position Proving Interlock –** System waits at "RUN TO PURGE" until terminal #81 is active. Input must be maintained active until "RUN TO IGNITION"
2	**Close Position Proving Interlock-** System waits at "RUN TO IGNITION" until Terminal #80 is active. Input must be maintained active until "FIRING".	Input Disabled
3	**Close Position Proving Interlock-** System waits at "RUN TO IGNITION" until Terminal #80 is active. Input must be maintained active until "FIRING".	**Open Position Proving Interlock –** System waits at "RUN TO PURGE" until Terminal 81 is active. Input must be maintained active until "RUN TO IGNITION"
4	Input Disabled	If Terminal 81 is made active during "FIRING" unit enters "L.F.H." mode.
8	If Terminal 80 is made active during "FIRING" unit enters "Night Setback" mode.	Input Disabled
9	If Terminal 80 is made active during "FIRING" unit enters "Night Setback" mode.	**Open Position Proving Interlock –** System waits at "RUN TO PURGE" until terminal #81 is active. Input must be maintained active until "RUN TO IGNITION"
12	If Terminal 80 is made active during "FIRING" unit enters "Night Setback" mode.	If Terminal 81 is made active during "FIRING" unit enters "L.F.H." mode.

2.18.13 CONNECTION BETWEEN THE MINI MK7 EVO AND AN AUTOFLAME EXHAUST GAS ANALYSER (EGA) UNIT

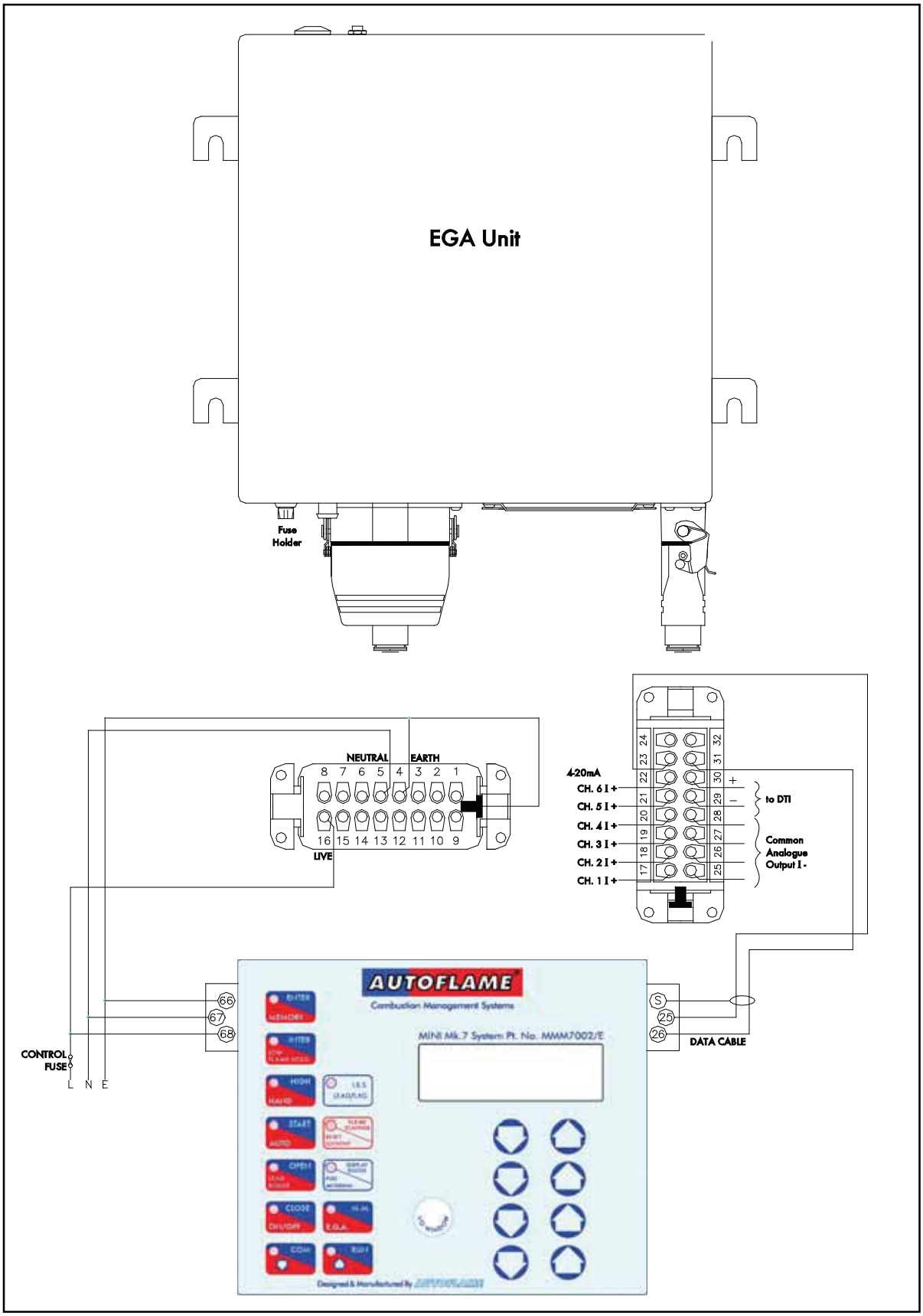

2.18.13.1 Connection Between The Mini Mk7 EVO And An O2 Interface Module

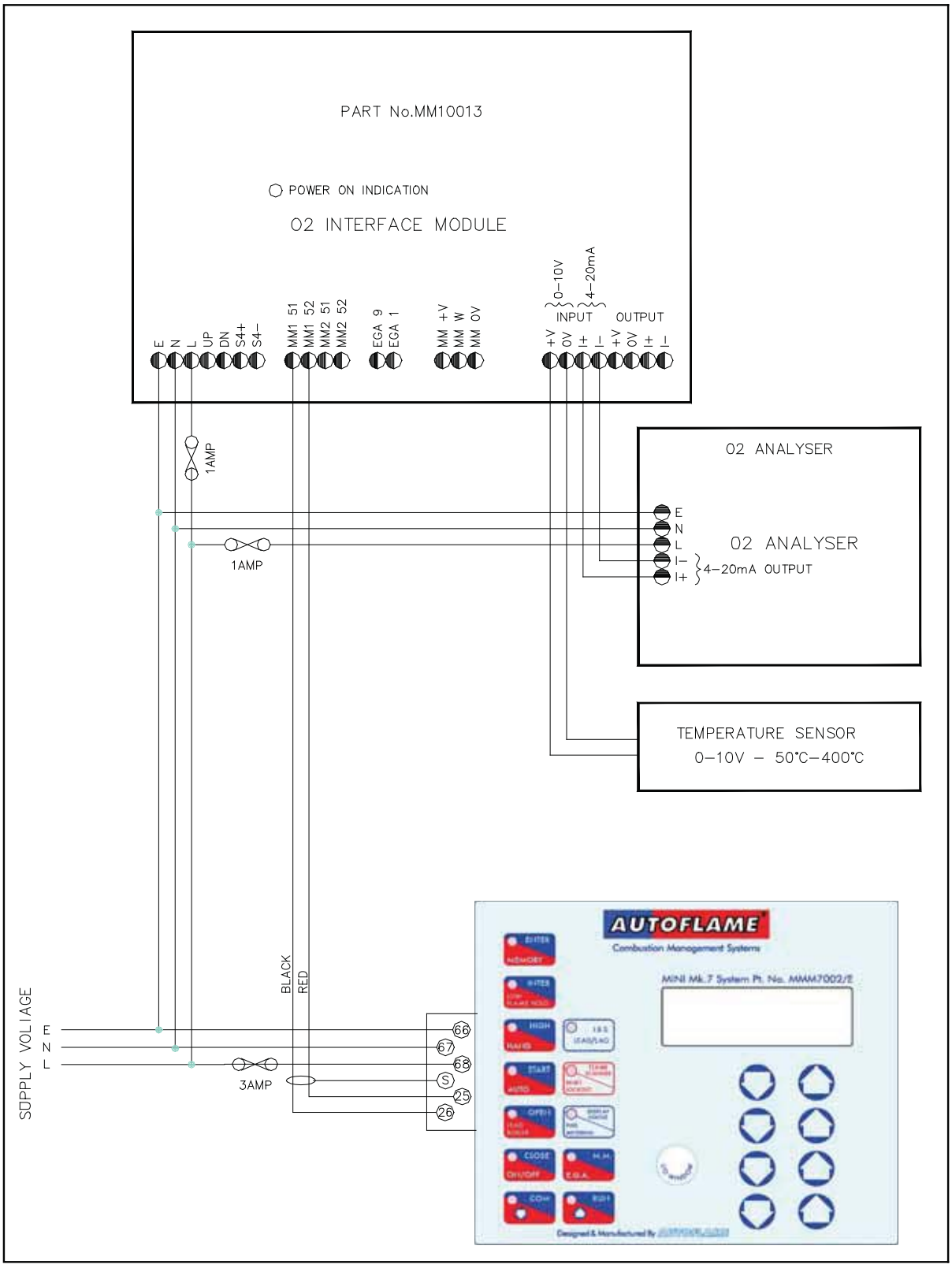

2.18.14 BURNER ON/OFF AND SETPOINT DISPLAY MANIPULATION

As default, the Mini Mk7 EVO can be enabled or disabled and allow changes to the setpoint value of the burner temperature or pressure through the front Mini Mk7 EVO facia. This function is defined through Option 15 which is default to 3 "Burner on/off manipulation enabled, setpoint manipulation enabled".

Option 15 allows the user to define the following combinations,

0 Burner On/Off manipulation disabled, setpoint manipulation disabled
1 Burner On/Off manipulation disabled, setpoint manipulation enabled
2 Burner On/Off manipulation enabled, setpoint manipulation disabled
3 Burner On/Off manipulation enabled, setpoint manipulation enabled

When Option 15 is set to either 2 or 3, the Mini Mk7 EVO can be enabled or disabled by pressing the

button. The Mini Mk7 EVO screen will display whether the module is on or off on the display screen, which is accessed by pressing the 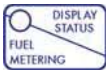

button once. When the burner is enabled, the display status screen will display the firing rate, when the burner is disabled the message "BURNER OFF" is displayed. When Option 15 is set to either 1 or 3, the setpoint the Mini Mk7 EVO control modulates the burner to meet can be modified using the front control panel. To increase the setpoint, press the

button. To decrease the setpoint, press the

button.

2.18.15 OPERATING SCREENS

Several different displays are available to provide the operator with information through start-up and normal operation.

Selectable screens provide the following information:

Startup /Fuel Select

```
AUTOFLAME
MINI MK7 EVO
COMBUSTION
MANAGEMENT SYSTEM
```

Displayed at startup and when no fuel is selected

MM Status

```
CHANNEL 1          80.0
CHANNEL 2          42.0
CHANNEL 3          37.6
LOW FLAME HOLD
```

Shows the angular value for each of the positioning motors, channels 1 to 3. The bottom row displays additional status information, including Low Flame Hold, Hand Operation, Golden Start, FGR Start.

IBS Status

```
ID  1        LEAD  2

STATUS       STANDBY
```

For a multi boiler installation, this screen shows which is the lead boiler and the unit's identification number.

EGA Online Values

```
O2  4.3%     CO2 9.4%
CO  12PPM    NO 30PPM
AMB 12C      DELTA 296C
EXH 291C     EFF 77.8%
```

When an Exhaust Gas Analyser (EGA) is included in the system, this screen shows the actual values of the gases being measured in the flue plus the exhaust gas temperature, ambient temperature, ΔT, and efficiency. A similar screen shows the commissioned values.

Burner Control Status/Time with UV Scanner

```
FIRING
FLAME SIGNAL UV     27

TIME  12:35   23:JAN:11
```

Row 1 indicates the burner sequence state, row 2 gives the flame signal strength- UV discharges. If the signal strength drops below 5 then a lockout will occur.

Lockout History

```
NO 1  10:00   23:JAN:11
RES   10:05   23:JAN:11
NO FLAME SIGNAL
FIRING
```

Up to the last 16 lockouts are displayed here. Details include time and date of lockout and reset, the cause of the lockout and at what stage of the sequence the lockout occurred. Only one lockout record can be displayed at a time. Press the flame scanner button to scroll through the records.

Fuel Metering Status

```
FUEL 1       NATURAL GAS
FLOW UNITS       CU MTRS
FLOW RATE/MIN      20.00
TOTAL            4056.7
```

This screen displays which fuel is currently selected, the consumption at this point in time and the total fuel used to date.

System Status

```
FUEL 1       NATURAL GAS
FIRING RATE        100%
REQUIRED           82 C
ACTUAL             45 C
```

This screen shows the present firing rate, which fuel is being used, and the required/actual values.

History

```
HISTORY FUEL 1
HOURS RUN           1763
STARTUPS             276
```

The hours run and the number of startups for the currently selected fuel are displayed on this screen. The screen is selected by pressing the display status button.

Burner Control Status/Time with Flame Rod

```
FIRING
FLAME ROD SIGNAL     27

TIME  12:35   23:JAN:11
```

Row 1 indicates the burner sequence state, row 2 gives the flame ionisation signal strength. If the signal strength drops below 5 then a lockout will occur.

2.18.15.1 Setting The Time and Screen Contrast

2.18.15.1.1 Setting the Time and Date

To adjust the time and date settings go into COM mode. Power down the unit and restart. The COM LED will be flashing and you have 5 seconds to press it. The password screen will then be displayed. Set password to: 10 10 then press CLOSE ON/OFF and the 'Set Clock' screen is displayed:

```
DAY   FRI   DATE 23
MONTH JAN   YEAR 11
HOURS  12   MINS 28
```

Use the buttons as detailed below to adjust the values appropriately.

Channel 1 Day

Channel 2 Date

Channel 3 Month

OPEN LEAD BOILER / DISPLAY STATUS FUEL METERING Year

CLOSE ON/OFF / M.M. E.G.A. Hours

COM / RUN Minutes

When finished press the flashing ENTER MEMORY button to submit to memory.

Note: Hours are displayed in 24 hour mode.

2.18.15.1.2 Adjusting the Screen Contrast

Hold down any of the screen select buttons,

COM / M.M. E.G.A. / I.B.S. LEAD/LAG / DISPLAY STATUS FUEL METERING

And then use channel 1 row to adjust the contrast accordingly.

2.18.15.2 Setting Run Times

Run times in the Mini Mk7 EVO can be used to set two periods of time per day when the burner runs in normal operation or the Mini Mk7 EVO is in a reduced setpoint mode. Outside of these times the Mini Mk7 EVO will remain in standby mode regardless of required and actual temperatures/pressure. In reduced setpoint the required setpoint can be set at a lower required setpoint independently of the normal required setpoint.

To set the run times on the Mini Mk7 EVO you must power up the unit and press the

button within 5 seconds. Enter the Run Time password '11 11'. After entering the password the following screen will be displayed,

```
RUN TIMES DISABLED
```

With this screen set the run times on the Mini Mk7 EVO are disabled. To enable run times press the

button and the following screen will be displayed,

```
RUN TIMES - MON
SETTING PERIOD 1
 8:00
 18:00
```

Using the following buttons you can do the following;

Channel 1 - changes the hour on the start (top) time.

Channel 2 - changes the minute on the start (top) time.

Channel 3 - changes the hour on the finish (bottom) time.

Channel 4 - changes the minutes on the finish (bottom) time.

- Changes the day.

- Sets the time period to be a normal operation period or for reduced setpoint to be active denoted by 'NS'.

- Switches between setting period 1 and period 2.

- Enables/disables Run Times.

Once the run times are satisfactory press

to set the run times and restart the Mini Mk7 EVO.

To view the Run Times and the times set while the Mini Mk7 EVO is running press the 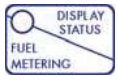

button three times.

2.18.16 MINI MK7 EVO ELECTRICAL SPECIFICATION

2.18.16.1 Classfications

Mains Supply:	230V, +10%/-15% } 110V, +10%/-15% }	47 - 63 Hz, Unit max. power consumption 10W
Climate:	Temperature Humidity	0 to +60˚C (32 to 104˚F). 0 to 90% non-condensing.
Storage:	Temperature	-20 to 85˚C (-4 to 185˚F).
Protection Rating:	The unit is designed to be panel mounted in any orientation and the front facia is IP65. The back of the unit is IP20.	

2.18.16.2 Inputs and Outputs

230V Unit:

Outputs	Terminal	57	250mA	Must be connected through contactor	Max. Load 5.5 Amp
		58	250mA	Must be connected through contactor	
		59	1 Amp	0.6 power factor	
		60	1 Amp	0.6 power factor	
		61	1 Amp	0.6 power factor	
		62	1 Amp	0.6 power factor	
		63	1 Amp	0.6 power factor	
		78	100mA	To drive relay only – switched neutral	
		79	100mA	To drive relay/lamp only – switched neutral	

110V Unit:

Outputs	Terminal	57	250mA	Must be connected through contactor	Max. Load 9 Amp
		58	250mA	Must be connected through contactor	
		59	2 Amp	0.6 power factor	
		60	2 Amp	0.6 power factor	
		61	2 Amp	0.6 power factor	
		62	2 Amp	0.6 power factor	
		63	2 Amp	0.6 power factor	
		78	100mA	To drive relay only – switched neutral	
		79	100mA	To drive relay/lamp only – switched neutral	

Note:

1 The high and low voltage connections are not safe to touch. Protection against electric shock is provided by correct installation. **CAUTION – Electric shock hazard**.
2 Cabling should be a maximum 25m.
3 Use screened cable as specified in Section 2.18.16.3
4 **The burner 'High Limit Stat' must be of the manual reset type.**

2.18.16.3 Cables Specifications

Screened Cable

The screened cable used from the MM to the servo motors and detectors must conform to the following specification:

16/0.2mm PVC insulated overall braid, screened, PVC sheathed.

Sixteen wires per core;
Diameter of wires in each core 0.2mm;
Rated at 440 volts a.c. rms at 1600 Hz;
DEF 61-12 current rating per core 2.5 Amps;
Maximum operating temperature 70 degrees C (158 degrees F);
Nominal conductor area 0.5 square mm per core;
Nominal insulation radial thickness on core 0.45mm;
Nominal conductor diameter per core 0.93mm;
Nominal core resistance at 20 degrees C. 40.1 Ohm/1000m.;
Nominal overall diameter per core 1.83 mm;
Fill factor of braid screen 0.7;
Equivalent imperial conductor sizes 14/0.0076;

Use the number of cores suitable for the application.
A universal part numbering system appears to have been adopted for this type of cable as follows:

16-2-2C 2 Core
16-2-3C 3 Core
16-2-4C 4 Core
16-2-6C 6 Core

(5 Core not readily available)

Data Cable

Data cable must be used for connections between MMs for twin burner/sequencing applications and between MM's and EGAs.

Types of data cable that can be used:

1 Beldon 9501 for 2-core shielded cable (1 twisted pair);
2 Beldon 9502 for 4-core shielded cable (2 twisted pairs);
3 STC OS1P24;

Samples are available upon request.
Cable can be ordered directly from Autoflame Engineering.

2.18.16.4 Terminals Descripition

1	Current Input, 0-20mA. For channel 4 VSD use only. Can be connected to the current output of a VSD or tachometer system as appropriate
2	Voltage Input, 0-10V. For channel 4 VSD use only. Can be connected to the voltage output of a VSD or tachometer system as appropriate
3	Common for Terminals 1 and 2
10	Current Output, 4-20mA. For channel 4 VSD use only. Can be connected to the current input of a VSD
11	Voltage Output, 0-10V. For channel 4 VSD use only. Can be connected to the voltage input of a VSD
12	Common for Terminals 10 and 11

Note that all the common Terminals (3, 6, 9, 12, 15, 18) are connected to each other internally. All of the circuitry, associated with the analogue inputs and outputs detailed above, is isolated from earth/ground potential, i.e. floating.

Note: It is advised to put a jumper/link between Terminals 3 and S in order to protect against electrical interference.

21, 22	Connections to an Autoflame self check UV sensor
25, 26	Communications port connections to an Exhaust Gas Analyser (EGA)
27, 28	Communications port connections for DTI and/or IBS/lead-lag operation
29, 30	Connections to an Autoflame IR scanner
37, 38	Connections to an Autoflame boiler temperature detector
37, 38, 39	Connections to an Autoflame boiler pressure detector
40	0V supply to channel 1 and channel 2 positioning motors
41	+12V supply to channel 1 and channel 2 positioning motors
42	Signal from channel 1 positioning motor, indicating position
43	Signal from channel 2 positioning motor, indicating position
44	Signal from channel 3 positioning motor, indicating position
45	Signal from channel 4 positioning motor, indicating position
46	0V Supply to channel 3 and channel 4 positioning motors
47	+12V Supply to channel 3 and channel 4 positioning motors

50,51	Connections to an Autoflame UV sensor
64	Connection to Flame Rod
53	Mains voltage input- burner on/off signal. Running interlock circuit
54	Mains voltage input- safety circuits, e.g. air proving
55	Mains voltage input- proving circuits, e.g. gas valve proof of closure
57	Mains voltage output- call for heat
58	Mains voltage output- burner motor
59	Mains voltage output- start/pilot valve
60	Mains voltage output- main fuel valve 1
61	Mains voltage output- main fuel valve 2
62	Mains voltage output- vent valve
63	Mains voltage output- ignition transformer
66	Mains supply- earth
67	Main supply- neutral
68	Mains supply- live/hot
69	Mains voltage output. Power to positioning motors
70	Switched neutral- drives channel 1 positioning motor clockwise
71	Switched neutral- drives channel 1 positioning motor counter clockwise
72	Switched neutral- drives channel 2 positioning motor clockwise
73	Switched neutral- drives channel 2 positioning motor counter clockwise
74	Switched neutral- drives channel 3 positioning motor clockwise
75	Switched neutral- drives channel 3 positioning motor counter clockwise
78	Switched neutral-to drive 2-port valve for IBS/lead-lag operation
79	Switched neutral- alarm output for MM lockout/MM error/EGA error/T.D.S. limits
80	Low Fire Interlock
81	High Purge Interlock
82	Valve Proving Switch (VPS)

89	Mains voltage input- selects fuel 1 curve
90	Mains voltage input- selects fuel 2 curve
S	All terminals marked S are internally connected. They are provided for connections to the various screened cables. Refer to the schematic connection diagrams, Section 2.18.2.3

2.18.17 ERROR CHECKING, SELF DIAGNOSTICS FAULT ANALYSIS AND ID CODES

2.18.17.1 Self Diagnostic Fault Identification Software

The "Error Checking" Software is included as standard on every Autoflame MM unit. Continually interrogating the MM system, the Error Checking Software compares component data to commissioned values and triggers an alarm and/or lockout when a data handling failure occurs. This intensive self checking programme is carried out on all peripherals such as positioning motors and load detectors as well as the main MM system hardware.

The safety related areas, both hardware and software, have been examined and accepted for U.L. Any error identified by the system is indicated by an the words "ERROR" being displayed on the Mini Mk7 EVO display screen with the corresponding error identification code displayed thereafter.

When an ERROR is triggered and a lockout results, the Mini Mk7 EVO unit will have to be manually reset from through the front facia interface. By resetting an ERROR/Lockout it is assumed that the problem itself has been resolved, it is not advisable to reset an ERROR/Lockout without first investigating why the particular ERROR/Lockout occurred.

To reset an ERROR/Lockout, press and hold the

button.

In the case of EGA related faults, such as "ERROR EGA" being displayed with the corresponding error identification code, press the

and

buttons.

2.18.17.2 Key to the Errors Detected on the Mini Mk7 EVO System

Error Fault Type	Code No	
CH1 Positioning Error	01	Check wiring & motor
CH2 Positioning Error	02	
CH3 Positioning Error	08	
CH1 Gain Error	41	Check wiring & potentiometers are zeroed correctly
CH2 Gain Error	42	
CH3 Gain Error	43	
CH4 VSD Error	80	CH4 variable speed drive error
CH4 VSD Error	83	Feedback values different from commissioned values see Section 2.18.7.3
Load Detector	03	Open circuit on load sensor
12V/5V Supply Error	44	Internal 5V/12V supply outside limits. Check 12V on Terminals 40 & 41
A/D Converter Error	47	Internal 12V supply on Terminals 40,42. Cycle power to the unit.

2.18.17.3 Burner Control Lockouts

Lockout Message	Code	Cause
Pre ign fail cpi	-	Proof of closure switch opened during ignition sequence. Check Terminal 55 and proof of closure switches (CPI = close position interlock / proof of closure)
Safety fail aps	-	No air pressure during start/firing. Check Terminal 54 and air switch.
No flame signal	-	No flame signal during ignition and/or firing
Simulated flame	-	A flame is present when it should not be. **CALL SERVICE IMMEDIATELY**
FSR A or B fault	57	These Terminals are self checked within the Mini Mk7 EVO. If a voltage is detected when the output is off (and vice versa) a lockout occurs.
Start gas O/P	59	
Motor O/P	58	
Ignition O/P	63	
Main Fuel Valve 1 O/P	60	
Main Fuel Valve 2 O/P	61	
Vent Valve O/P	62	
Prolonged L/O Reset	-	Lockout reset button permanently pressed
Pre ign timeout cpi	-	Proof of closure switch not made after valves closed after firing. Checking Terminal 55 and proof of closure switches.
UV short circuit	-	Connections to UV tube shorted
Watchdog '...'	-	Internal fault diagnostics – contact Autoflame and report code displayed. Possible hardware issue & repair required
RAM test failed	-	
PROM test failed	-	
CPU test failed	-	
Input fault	-	
Lockout 199	-	
Lockout 201	-	
Lockout 202	-	
Limit switch open	-	Proof of closure switch opened during purge sequence. Check Terminal 81 and ensure the servomotor and switch is setup correctly
Limit switch closed	-	Proof of closure switch opened during purge sequence. Check Terminal 80 and ensure the servomotor and switch is setup correctly

Note:

1. The above lockouts correspond to Mini Mk7 EVO lockouts and not any EGA user defined related settings.

2.18.18 HAND, LOW FLAME HOLD AND AUTO MODES OF OPERATION

The mini Mk7 EVO is capable of operating in three possible modes of operation: Hand, Low Flame Hold (LFH) and Auto. These three operating modes are explained as follows.

2.18.18.1 Hand and LFH Modes of Operation

Hand and L.F.H .operation are only effective when the burner is firing. They will have no effect when the burner is off or during the burner start up cycle. The Mini Mk7 EVO is put into either mode of operation by pressing and holding either the

or

buttons for 3 seconds. When either is pressed, a "HAND" or "LOW FLAME HOLD" message is displayed on the Mini Mk7 EVO MM screen, displayed by pressing

the button.

When in "HAND" mode, the position of the Channel 1,2,3 and VSD channel 4 can be varied by pressing the

button to modulate up the combustion curve; therefore increasing the firing rate of the burner, or by pressing the

button to modulate down the combustion curve; therefore decreasing the firing rate of the burner. While in "HAND" mode, the setpoint of the burner cannot be changed.

When in L.F.H. mode, the burner modulates to the lowest point on the combustion curve. This will only be maintained if the actual temperature of pressure load reading is below the setpoint value. If the burner reaches its required setpoint while in L.F.H., the Mini Mk7 EVO will shut the burner off. If then, at a later point in time, the measured temperature or pressure load drops below the user defined setpoint value the Mini Mk7 EVO will bring on the burner and maintain fuel and air damper positions at L.F.H. While in L.F.H. the setpoint of the burner can be changed as required.

2.18.18.2 Auto Mode of Operation

When the

button is pressed and held for 3 seconds, the Mini Mk7 EVO will operate in the "AUTO" mode of operation.

In Auto mode, the Mini Mk7 EVO modulates the burner according to its internal PID controller settings and the setpoint required by the end user. Or alternatively, through the parameters of an external control system.

2.18.19 IR UPLOAD/DOWNLOAD SOFTWARE

Similar to other Autoflame MM controllers, commissioned information stored on the Mini Mk7 EVO can be downloaded and stored as a *.bin* file or uploaded into the unit; this requires knowledge of the commissioning password. To take a download or the commissioned data or upload data into the Mini Mk7 EVO, the IR upload/download software and cable are required; Part Number: MM60010, as demonstrated in Figure 2.18.19.

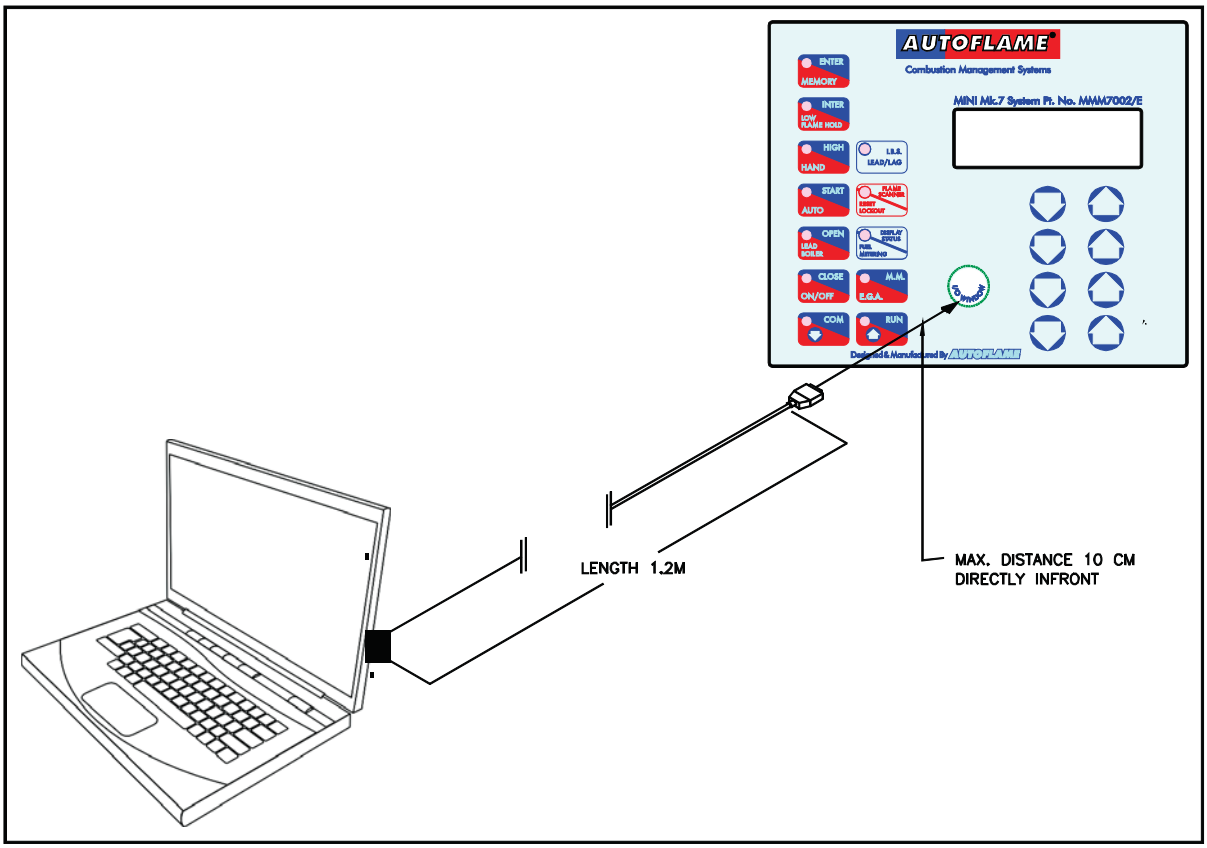

Figure 2.18.19 IR Upload/Download Schematic

2.18.19.1 Software Installation

Software installation:

After inserting the CD, click view files when prompted or go through Computer on the Start menu to view the CD. To start the install double click on the application file on the CD. This file will take you through the installation process.

The second CD contains the ID.bin file, this file is necessary for the IR Upload/Download software to work without this file in the correct location the IR Upload/Download software will not open. The ID.bin file must be put in the same location as where the IR Upload/Download software is installed. This is typically C:\Program Files\Autoflame Engineering Ltd\IR Upload Download

As later improvements and revisions of the software become available, it is possible to download these from our website. However, the initial ID.bin file must be kept in order to keep you information and data. In order to use the upload/download software, it may be necessary to close any programs associate with the same port location, e.g. BlueTooth.

2.18.19.2 Using the IR Upload/Download software

The first time the IR Upload/Download software is used the screen in Figure 2.18.19.2.i is shown

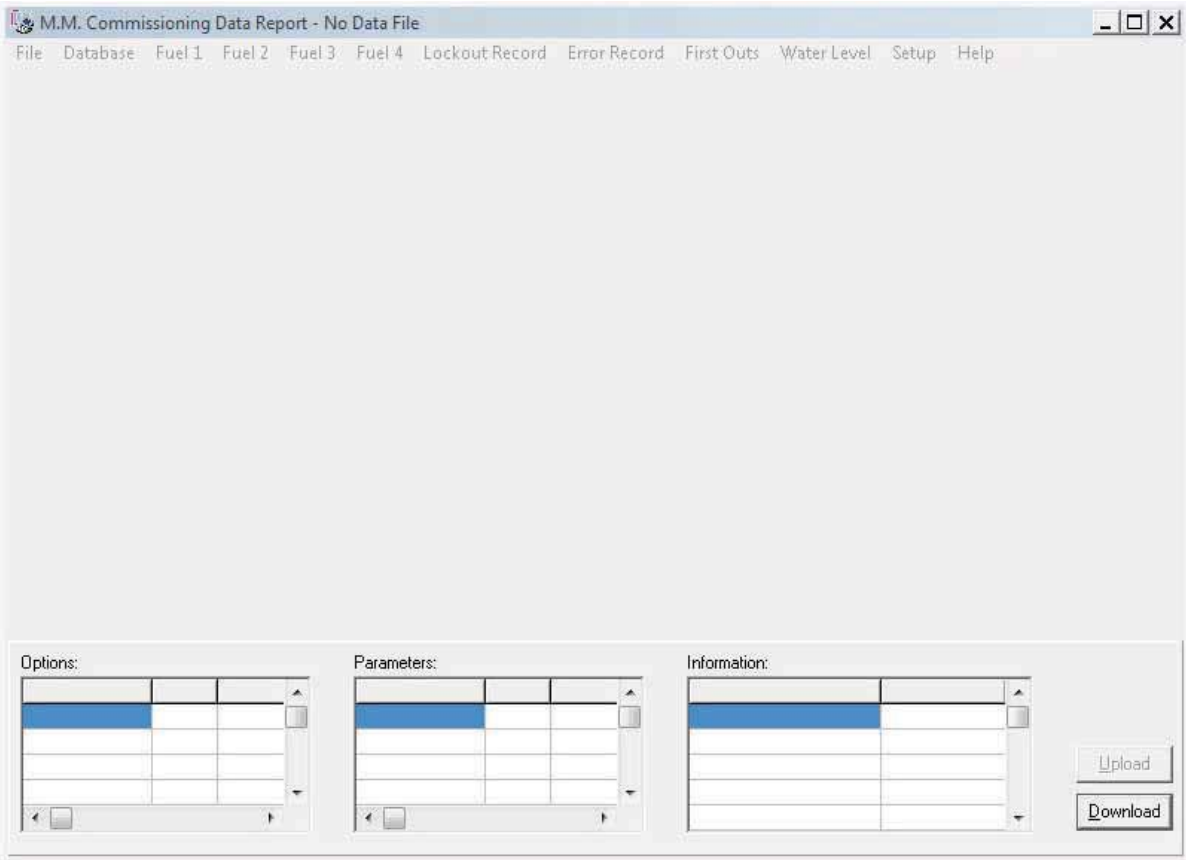

Figure 2.18.19.2.i

For the IR Upload/Download software to work correctly first ensure that the port connections are setup correctly. To setup a port click on the setup tab in Figure 2.18.19.2.i and then port. Figure 2.18.19.2.ii will then appear, ensure that the port is the correct one for the IR Upload/Download lead and also ensure that error checking is set to Mini Mk7 when uploading or downloading from a Mini Mk7 EVO

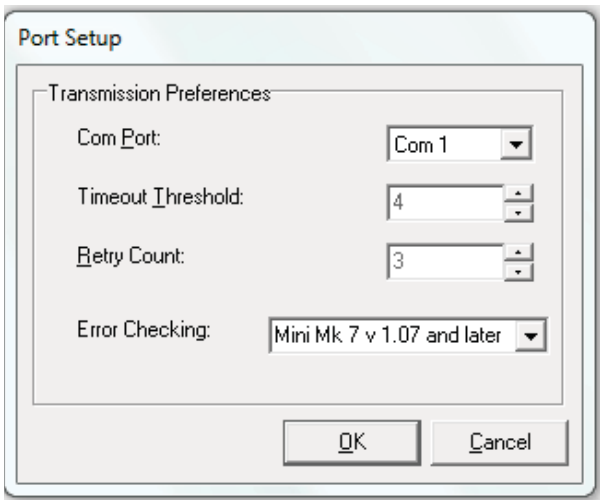

Figure 2.18.19.2.ii

Once the Ports have been set correctly it is necessary to create at least one site in the Database tab to be able to do a download. Figure 2.18.19.2.iii is shown when the Database tab is clicked, from here it is possible to create new sites on the database by pressing the + button or to view different sites by pressing the arrow buttons.

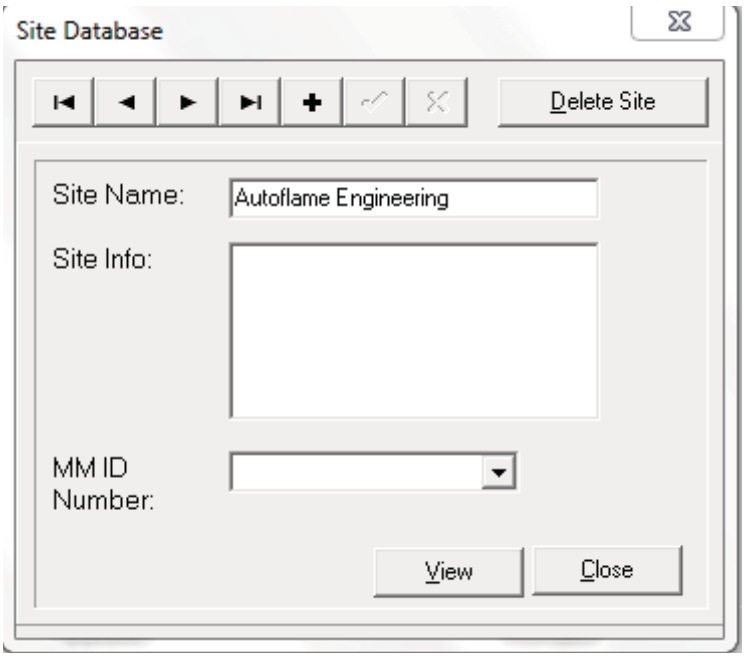

Figure 2.18.19.2iii

To do a download of a Mini Mk7 EVO first ensure that the Mini Mk7 EVO is ready for downloading by going into commissioning mode. Next click on the download button on the upload/download software to bring up Figure 2.18.19.2.iv. Select a site and type in a site name, once you click ok the download process will begin so ensure that the IR Lead is facing the IR Port on the front of the Mini Mk7 EVO.

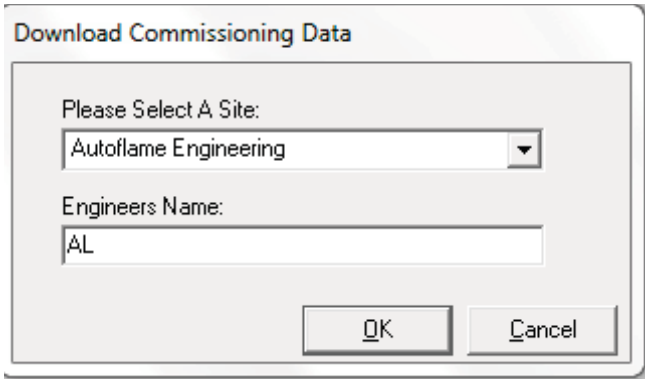

Figure 2.18.19.2.iv

Once the download is complete something similar to Figure 2.18.1.v will be shown. From this screen it is possible to view the fuel air ratios of all the fuels commissioned, the lockout and error records of the unit and the Options and Parameters for the unit.

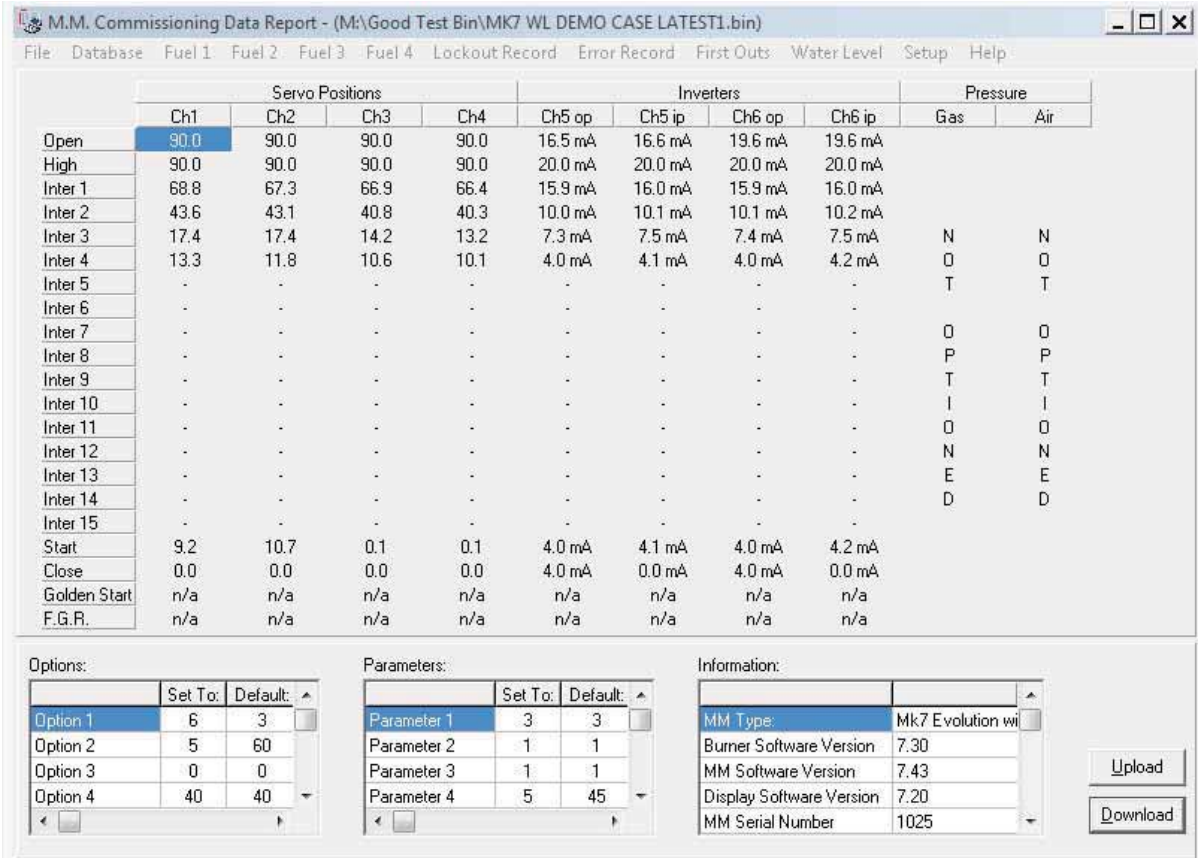

	Servo Positions				Inverters				Pressure	
	Ch1	Ch2	Ch3	Ch4	Ch5 op	Ch5 ip	Ch6 op	Ch6 ip	Gas	Air
Open	90.0	90.0	90.0	90.0	16.5 mA	16.6 mA	19.6 mA	19.6 mA		
High	90.0	90.0	90.0	90.0	20.0 mA	20.0 mA	20.0 mA	20.0 mA		
Inter 1	68.8	67.3	66.9	66.4	15.9 mA	16.0 mA	15.9 mA	16.0 mA		
Inter 2	43.6	43.1	40.8	40.3	10.0 mA	10.1 mA	10.1 mA	10.2 mA		
Inter 3	17.4	17.4	14.2	13.2	7.3 mA	7.5 mA	7.4 mA	7.5 mA	N	N
Inter 4	13.3	11.8	10.6	10.1	4.0 mA	4.1 mA	4.0 mA	4.2 mA	O	O
Inter 5	-	-	-	-	-	-	-	-	T	T
Inter 6	-	-	-	-	-	-	-	-		
Inter 7	-	-	-	-	-	-	-	-	O	O
Inter 8	-	-	-	-	-	-	-	-	P	P
Inter 9	-	-	-	-	-	-	-	-	T	T
Inter 10	-	-	-	-	-	-	-	-	I	I
Inter 11	-	-	-	-	-	-	-	-	O	O
Inter 12	-	-	-	-	-	-	-	-	N	N
Inter 13	-	-	-	-	-	-	-	-	E	E
Inter 14	-	-	-	-	-	-	-	-	D	D
Inter 15	-	-	-	-	-	-	-	-		
Start	9.2	10.7	0.1	0.1	4.0 mA	4.1 mA	4.0 mA	4.2 mA		
Close	0.0	0.0	0.0	0.0	4.0 mA	0.0 mA	4.0 mA	0.0 mA		
Golden Start	n/a	n/a	n/a	n/a	n/a	n/a	n/a	n/a		
F.G.R.	n/a	n/a	n/a	n/a	n/a	n/a	n/a	n/a		

Figure 2.18.19.2v

To Upload into a Mini Mk7 EVO enter commission mode and enter the commissioning password. The press the Upload button on the Upload/Download software and Figure 2.18.19.2.vi will appear on screen. Select the Fuel Air Ratio to upload the download data into the Mini Mk7 EVO. Once the upload is complete the unit will automatically restart. If the unit does not restart then the upload has failed and will need to be re-attempted. Once the upload is complete ensure that all fuel air ratio positions, options and parameters have been uploaded successfully before firing the burner.

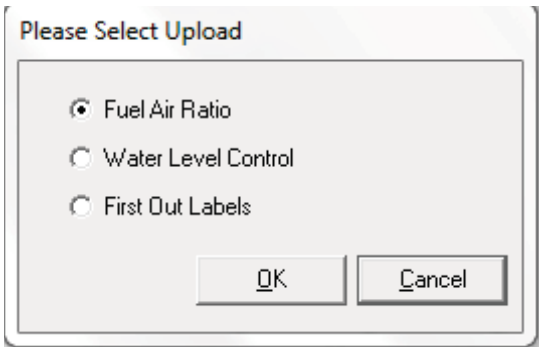

Figure 2.18.19.2vi

IT IS THE RESPONSIBILITY OF THE FACTORY TRAINED TECHNICIAN TO ENSURE THAT AFTER AN UPLOAD ALL THE OPTIONS, PARAMETERS AND FUEL/AIR RATIO COMMISSION DATA ARE CHECKED FOR CORRECTNESS. FAILURE TO DO SO WILL RESULT IN SERIOUS EQUIPMENT DAMAGE, CRITICAL INJURY OR DEATH.

SECTION 3: EGA – EXHAUST GAS ANALYSER

3.1 INTRODUCTION

3.1.1 Mk7 Exhaust Gas Analyser

3.1.2 Features and Benefits

3.1.3 Overview of System Operation

3.1.4 3 Parameter Trim

3.1.4.1 EGA Mk7 An Inside View

3.1.4.2 EGA Mk7 An Inside View Schematic

3.2 SENSOR CHARACTERISTICS

3.2.1 O_2 Sensor

3.2.2 CO, NO, SO2 and NO2 Sensors

3.2.3 CO2 Sensor

3.3 COMMISSIONING AND SETTING UP PROCEDURES

3.3.1 Introduction

3.3.2 Programming Fuel Air Positions (Systems With an EGA)

3.3.3 EGA Combustion Trim Operation

3.3.4 Channel 5 Trim

3.3.5 Trim Timing Operation

3.3.6 Graphical Trim Operation

3.3.7 Combustion Efficiency Calculations

3.4 ERROR CHECKING, SELF DIAGNOSTICS

3.4.1 Keys to Errors Detected

3.4.2 Other Possible Problems

3.4.2.1 Fuse Keeps Blowing

3.4.2.2 Continuous O2 Reading at 23%

3.4.3 Assembly of Dry Filter

3.5 ELECTRICAL SCHEMATICS

3.5.1 Interconnection between EGA and MM module

3.5.2 Interconnection Between Stand Alone EGA Modules and DTI Unit

3.6 INTERACTING WITH THE MK7 EGA INTERFACE

3.6.1 Sampling Screen

3.6.2 Emissions History Screens

3.6.3 CEMS Screen

3.6.4 EGA Settings
3.6.5 Cell Status Screen
3.6.6 Fault Log
3.6.7 Factory Settings Screen
3.6.8 4-20mA Setup
3.6.9 Operating Mode
3.6.10 Cell Calibration
3.6.11 Time And Date
3.6.12 Pinch Valve Setup
3.6.13 Change Password
3.6.14 Test and Calibration Setup

3.7 LIMITS ON FIVE MEASURED COMBUSTION PARAMETERS

3.7.1 Overview of Limits of Combustion: Features and Benefits
3.7.2 Standard Limits
3.7.3 Absolute Limits
3.7.4 Limits of Combustion Control Functions
3.7.5 Example of Limits on O2 Measurements
3.7.6 Example of Limits on CO2 Measurement
3.7.7 Example of Limits on CO Measurement

3.8 EGA DIMENSIONS

3.9 SAMPLING PROBE

3.9.1 Installation and Maintenance
3.9.2 Sampling Probe Assembly
3.9.3 Sampling Probe Internal Filter
3.9.4 Maintainance of the Sampling Probe
3.9.5 Servicing EGA Sampling Probe

3.10 TECHNICAL SPECIFICATION

3.11 ANCILLARY EQUIPMENT

3.11.1 External Particulate Filter
3.11.2 Air Inlet Filter
3.11.3 Chilled Enviromental Enclosure

3.12 SHIPPING THE EGA

3.1 INTRODUCTION

3.1.1 Mk7 Exhaust Gas Analyser

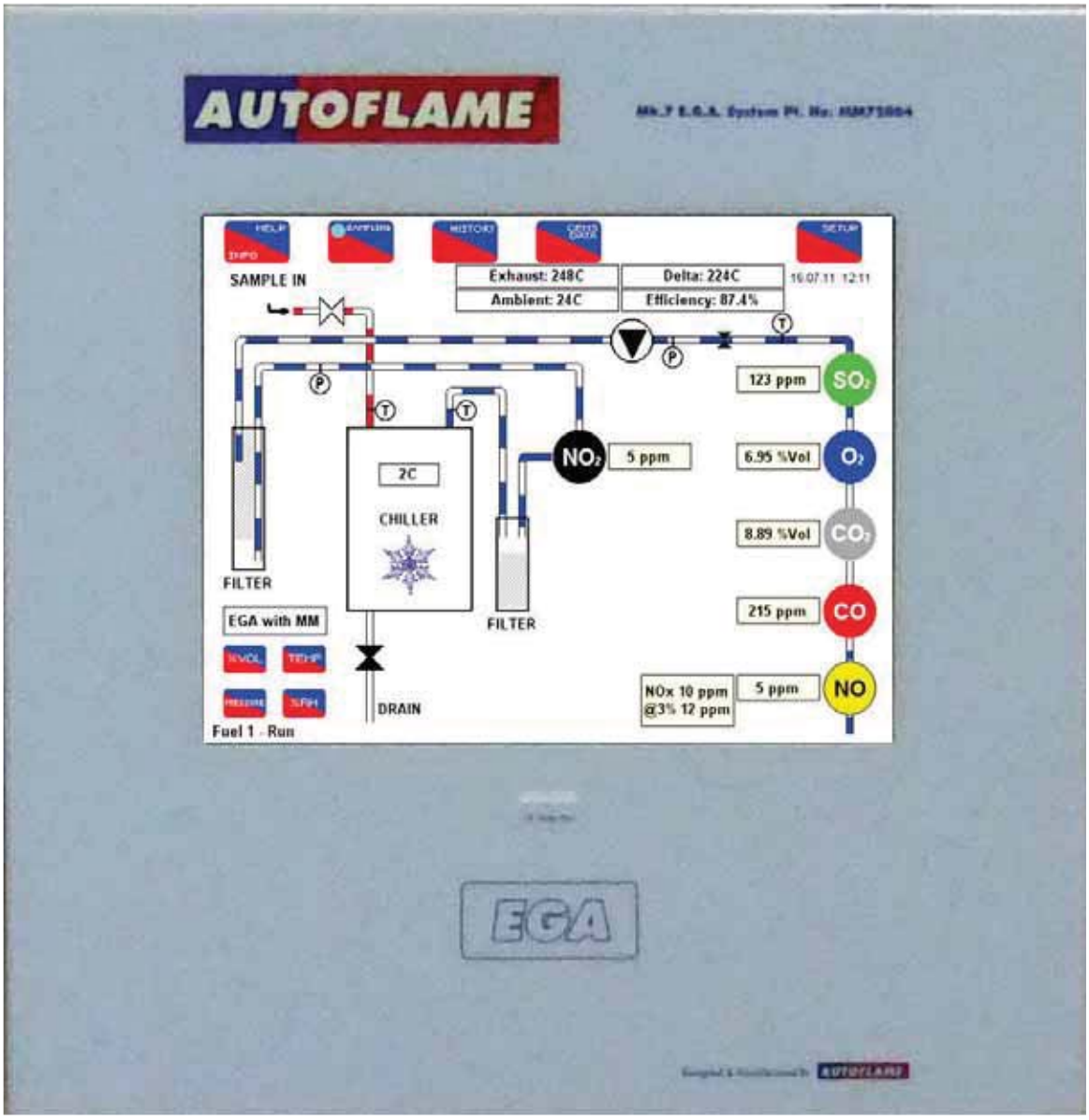

3.1.2 Features and Benefits

The EGA Mk7 is the accomplishment of thirty years on-going research and development for the exhaust gas sampling system. The EGA can be used for three separate applications:

Application 1: EGA Stand Alone

Stand alone sampling system. The emissions levels can be accessed via:

A full colour touch screen on the EGA.
The 6 channel 4-20 mA signals, user configurable (max. Load 250 Ohms each).
The Data Transfer Interface (DTI), this enables connections to a PC, BMS etc.

Application 2: EGA Combustion Trim

Interfaced with a Micro Modulation (MM) system enables 3 parameter combustion trim. The emissions levels can be accessed via:

A full colour touch screen on the EGA.
The MM unit. This displays the commissioned and the actual values.
The 6 channel 4-20mA signals, user configurable.
From the MM unit via the DTI, this enables connections to a PC, BMS etc.

Application 3: EPA compliant Continuous Emission Monitoring Software (CEMS)

Ability to monitor the exhaust gases and determine the exact amounts (volumetric and weight) of each of the exhaust gas parameters. These values are dependent on the fuel input, the calorific value of the fuel and the exhaust gas values (%/ppm).

Monitoring Capabilities

O2	Oxygen	% By Volume
CO	Carbon Monoxide	ppm
CO2	Carbon Dioxide	% By Volume
NO	Nitrogen Oxide	ppm
SO2	Sulphur Dioxide	ppm
NO2	Nitrogen Dioxide	ppm
Combustion Efficiency		% (A calculation of CO2 and delta temperature)
Exhaust Gas Efficiency		Degrees Celsius or Fahrenheit
Ambient Temperature		Degrees Celsius or Fahrenheit
Delta Temperature		Degrees Celsius or Fahrenheit

NO and SO2 or NO2 are monitored only, not used for combustion trim, although limits can be set for NO.

3.1.3 Overview of System Operation

The analyser samples the combustion gas via the stack mounted sampling probe purchased separately from the analyser (Part Number MM10033). The exhaust gas is drawn from the stack by a pump mounted internally within the analyser. Ensure that the supplied sample tubing is used between the sampling probe and analyser. The internal diameter of the sample tubing is 3mm; if a larger diameter tubing is used the sample gas remains resident in the tubing for a longer period. This will seriously affect the correct operation of the combustion trim. Contact Autoflame sales team for advice on applications.

Once the exhaust gas has entered the analyser the gas is reduced in temperature by the chiller block. The chiller block serves two functions; firstly reducing the gas temperature and secondly removing the condensation from the gas prior to the gas entering the sensors. The condensate accumulated in the chiller unit is drained every 40 minutes automatically through the drain solenoid.

The exhaust gas is then filtered through the dry filter. This is a fine filter which removes any dust particles carried over from the cooling process. On leaving the filter the exhaust gas is checked to ensure a vacuum is maintained prior to entering the pump. On exiting the pump the exhaust gas is again checked to ensure the pump is producing a pressure. Both pressure sensors modulate the flow rate of sample into the EGA to ensure consistent operation.

This process conditions the exhaust gasses ready for an accurate sampling by sensors. Once the gas has been sampled by all the sensors it is pumped out of the EGA from the clear tubing at the bottom of the EGA casing.

Important Note:

The exhaust gas is vented into the air stream leaving the EGA unit. This is located on the outside of the EGA enclosure next to the drain solenoid outlet. It is extremely important that the exhaust gas is vented into the atmosphere, i.e. do not install the EGA unit within a sealed enclosure. This would cause the EGA unit to self calibrate on contaminated gas. The EGA will self calibrate every 12 hours of running or when the burner starts and stops.

If the EGA unit is to be installed in an area of harsh environmental conditions outside those as quoted for the EGA module then an environmental enclosure is required. Please contact Autoflame sales for further information on this unit.

3.1.4 3 Parameter Trim

When the Autoflame EGA is used in conjunction with an Autoflame MM module it is possible to control the combustion via the 3 Parameter trim function. The trim function in its basic form controls the combustion of the burner by adding air (air rich) or taking away air (fuel rich) from the commissioned fuel air ratio positions to keep the volume of O2, CO2 and CO as close as possible to the commissioned values without compromising safety. To do this the Autoflame system creates a combustion map to map out how the burner will react when air is added or removed from the combustion process during commissioning. Unlike other systems on the market the Autoflame system continually monitors 3 parameters (O2, CO2 and CO) to create the safest and most efficient way of trimming the combustion process.

An ingress of tramp air through an ill fitting boiler or flue section will distort the O2 reading and show an increase in this value. This is now not measuring the combustion gases but in fact measuring the influence of the tramp air.

Single parameter O2 trim systems would see both of these conditions as rich (excess air) combustion and start to trim back the air damp position by closing the air damper. In reality this trim process is not trimming the combustion gases at this point, but is in fact trimming the exhaust gases which have a higher influence of O2. This can potentially lead to the formation of excessive amounts of CO but more importantly this can lead to the formation of dangerous combustion conditions, i.e. incomplete combustion.

Similarly single parameter CO2 trim systems would see an ingress of air as lower CO2 levels in the flue, inflicting similar dangerous conditions in the boiler.

Another benefit of the 3 parameter trim is that the EGA is continually measuring the formation of CO. The online CO value is compared to the commissioned value. A higher CO reading can be contributed to both lean and rich combustion. A lack of air will produce incomplete combustion and the formation of CO. Also, excess air around the flame envelope has the effect of chilling the flame edge causing incomplete combustion and higher CO levels.

By referencing all 3 parameters against mapped combustion performance the burner can be trimmed back to the original commissioned values whilst maintaining the highest degree of safety.

An added benefit of mapped combustion is 'feed forward trim'. In a fuel rich situation where air is being added, as the burner modulates to a new position the deviation in the air damper is added to each air position and so maintaining optimum combustion during modulation.

As a safety feature during lean (lack of air) combustion, where air is being subtracted, when modulating the fuel and air ratio will return back to the commissioned fuel and air mix for every 10 degrees of fuel valve movement. Once this new position is held the system will determine whether closing the air damper is still required at this new position. This ensures safe combustion at all times and the safety is never compromised by efficiency.

3.1.4.1 EGA Mk7 An Inside View

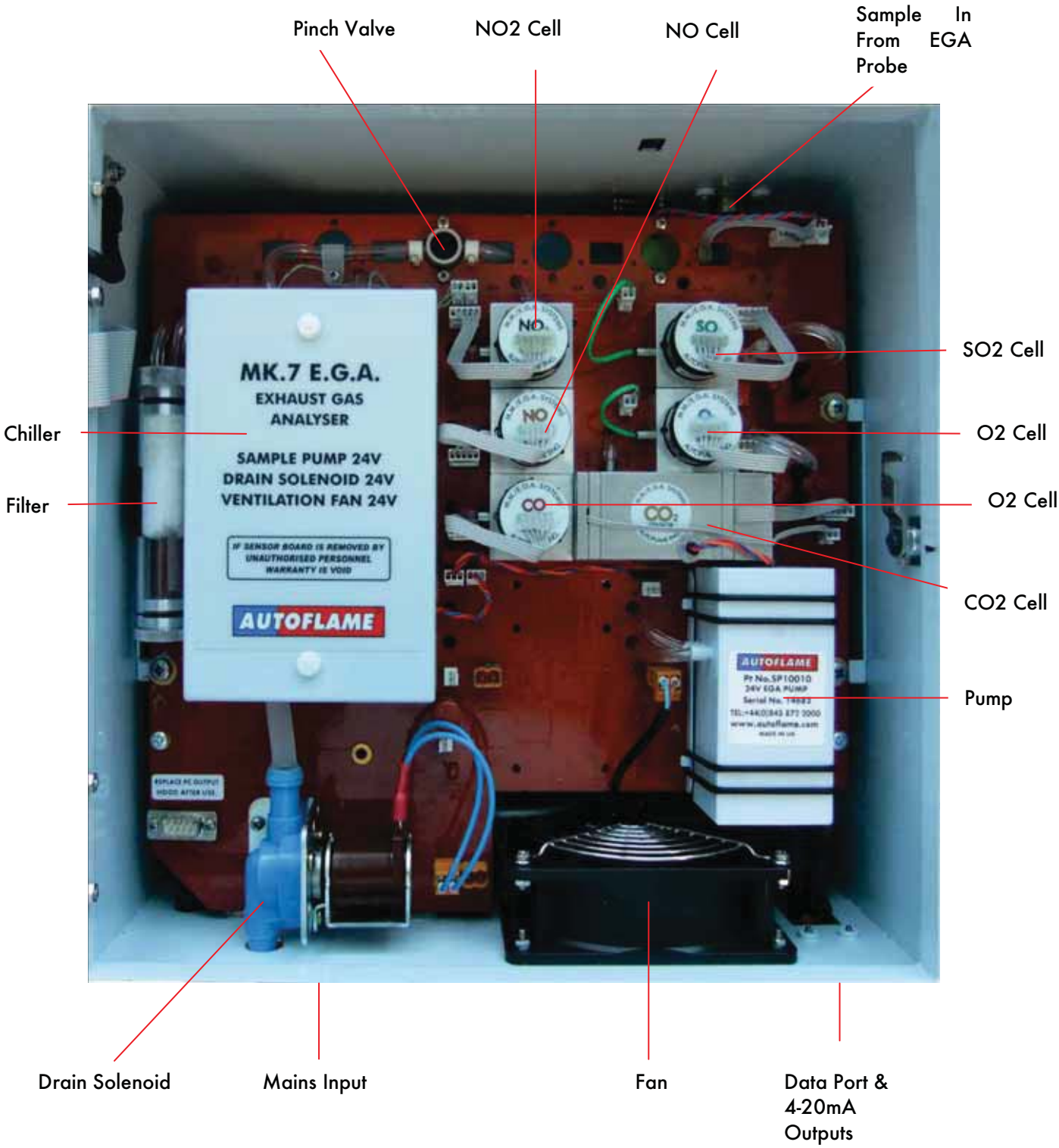

3.1.4.2 EGA Mk7 An Inside View Schematic

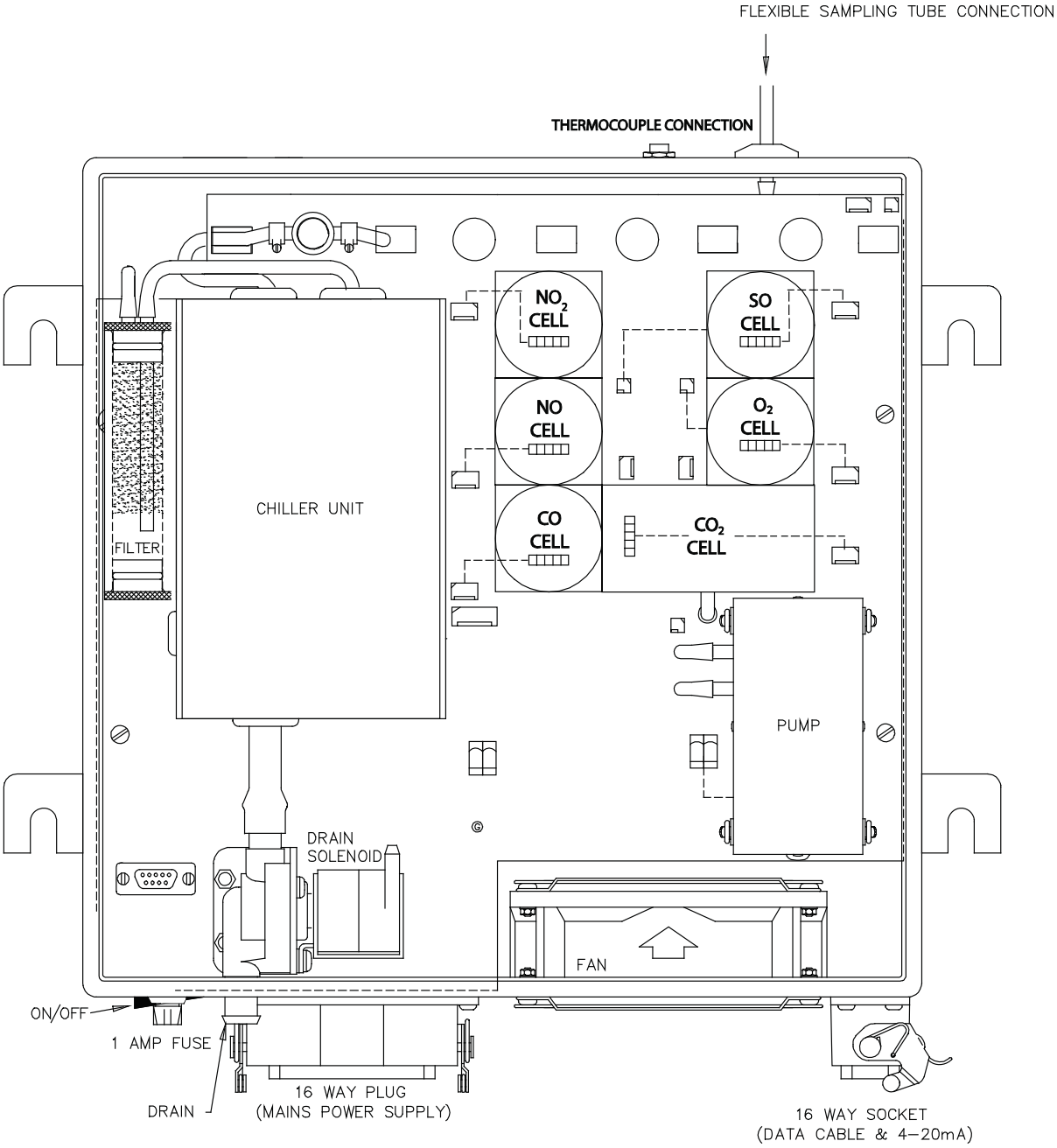

3.2 SENSOR CHARACTERISTICS

3.2.1 O_2 Sensor

This electrochemical cell is used for the detection of oxygen covering a concentration range of 0 to 30%. Due to the construction of the sensor they offer a long life and a high resistance when used with high sulphur content fuels. It is therefore perfectly capable of analysis when firing heavy or light fuel oil. The cell employs the principles detailed below;

The oxygen sensor incorporates a Lead oxygen cell with a Lead anode and a Gold cathode, using a specific acid electrolyte. Oxygen molecules which diffuse through a non porous Teflon membrane into the electrochemical cell are reduced at the Gold electrode. The current flow between the electrodes is proportional to the oxygen concentration in the flue gases measured.

Features:

Virtually no influence from CO, H2, S, NOx, and SOx i.e. no cross sensitivity.
No warm up time required.

Operation Ranges:

Detection Range	0 – 23 % O2
Accuracy	± 0.3 % Vol O2
Operating Temperature	5°C to 40°C (41°F to 104°F)
Shelf Life	6 months from date of dispatch
(In normal operation the sensor has a life expectancy of 2 years & is guaranteed for 6 months)	
Long Term Output Drift	< 1% signal/month typically
	< 10% over operating life

3.2.2 CO, NO, SO2 and NO2 Sensors

These sensors are electrochemical cells which are specifically managed by the calibration philosophy within the EGA unit. The accuracy of these sensors are within ± 5% at 100ppm. From experience we would expect to see a drift of ± 10ppm per annum without calibration. In our view this drift would not be detrimental to the operation or application of the EGA. The life of the sensors is a function of the concentration of gases measured over time. In order to optimise the life of the CO cell, the electronics will detect when the signal level from the cell reaches or exceeds 1000 ppm and will isolate the CO cells. The gas flow to these cells is restored once the O2 and CO2 readings are restored to a level within the pre-programmed limits.

CO Measurement:

On Gas Fuel	Measuring Range 0-1000 ppm
On Fuel Oil	Optional, CO is not normally measured as standard
Resolution at 20°C	1ppm
Repeatability	1% of signal
Shelf Life	6 months from date of dispatch

NO Measurement:

On Gas Fuel	Measuring Range 0-1000 ppm
On Fuel Oil	Optional, NO is not normally measured as standard
Resolution at 20°C	1ppm
Repeatability	2% of signal
Shelf Life	6 months from date of dispatch

SO2 Measurement:

On Gas Fuel	Optional, SO2 is not normally measured as standard
On Fuel Oil	Measuring Range 0-1000 ppm
Resolution at 20°C	1ppm
Repeatability	1% of signal
Shelf Life	6 months from date of dispatch

NO2 Measurement:

On Gas Fuel	Optional, NO2 is not normally measured as standard
On Fuel Oil	Measuring Range 0-200 ppm
Resolution at 20°C	0.5ppm
Repeatability	2% of signal
Shelf Life	6 months from date of dispatch

3.2.3 CO2 Sensor

This is manufactured by Autoflame and the technology employed is non-dispersive Infra-red. This sensor has no moving parts and is not an electrochemical cell. The exact description of how this works is commercially sensitive. The accuracy of the reading is ± 0.3% of reading. The cross sensitivity is virtually zero to other gases due to the method of calibration within the EGA unit. The lifetime is usually no less than two years on gas firing. The lifetime on oil firing is dependent on the Sulphur content of the fuel.

Measuring Range	0-20%
Shelf Life	12 Months from date of dispatch

3.3 COMMISSIONING AND SETTING UP PROCEDURES

3.3.1 Introduction

Commissioning with the EGA is an extension to commissioning with the MM and is required if the trim function is to be used. The factory trained technician must be completely familiar with the commissioning of the MM unit before commissioning with the EGA. Section 2.17.2 of the Technical Manual clearly explains commissioning with the MM unit.

The commissioning procedure as described must be strictly adhered to. Anybody commissioning an MM/EGA system must have an adequate understanding of combustion plants and be officially certified by Autoflame Engineering or their registered Distributors. **In the wrong hands, hazardous conditions could be made to exist that could lead to product damage, critical injury or death.**

The fundamental idea of the system is to set a fuel valve position and then set a corresponding air valve position. Care must be taken when adjusting the fuel and air positions so as not to create any unstable or dangerous combustion conditions, e.g. moving the fuel valve to the open position without increasing the air valve correspondingly.

Commissioning a system with a EGA does not require a combustion monitor as the EGA performs all normal exhaust gas measurements. When burning oil a smoke detection device is required to check that the smoke generated is within government guidelines.

Ideally, to implement commissioning as quickly as possible arrange for a substantial load on the boiler. The commissioning procedure can be interrupted due to excess temperature or pressure, causing the burner to turn off. In these instances the commissioning data accumulated so far is not lost. When the burner is called back on, the system starts up automatically and commissioning can proceed from where it left off.

Once the burner has been fired the maximum fuel position is entered first then descending fuel positions are entered consecutively until finally a minimum fuel position is entered. The CH1 and CH2 positions must always be less than the ones previously entered. However with CH3 – CH6 it is possible to move the position above or below the previously entered points. This is important if these channels are used to control FGR (Flue Gas Recirculation) or atomisation of oil.

On a newly installed system the following procedures should be carried out as listed:

1. Check all interconnecting wiring between the MM and external components are correct.
2. Set the Options required (See Section 2.17.2.4).
3. Set up positioning motors.
4. Programme fuel/air positions.

3.3.2 Programming Fuel Air Positions (Systems With an EGA)

CH1, CH2 etc. Refers to the rows of buttons with CH1 top.

Note: Throughout the commissioning procedure the 'COM' LED is illuminated.

1. Ensure 'stat' control circuit is closed, i.e. ensure there is an input on Terminal 53 of the MM.

2. Select Fuel. 'CLOSE' LED will flash. Use the keypad or the CH1 and CH2 buttons to enter the access code and press CLOSE button.

Note: If fuel selected is being re-commissioned, press COM button during start up of the MM.

3. The display indicates angular position of servomotors. After internal checks are made the CLOSE button LED will flash. Press the CLOSE button to start entering the close position.

4. Use CH1 to CH4 buttons (as optioned) to set positioning motors to 0.0. Press ENTER MEMORY button.

5. Press OPEN button.

6. Use CH1 to CH4 buttons to set positioning motors to their fully open positions. This is normally 90.0 for gas butterfly valves and burner air dampers, but may be set to less than 90.0 degrees if there are mechanical stops/limits. The EGA unit will now carry out a calibration for 2 minutes. Press ENTER MEMORY to set the open position and the system will purge.

7. Press START button to begin entering the start position.

WARNING

Do not enter the START position before reducing fuel input. This could result in a potentially dangerous situation.

8. Use CH1 to CH6 buttons to set positioning motors to a light off position.

9. Press ENTER MEMORY to light off the burner and HIGH will now flash.

10. Press HIGH to begin entering the high position.

11. Use CH1 and CH6 to set maximum firing input (it is not possible to exceed the OPEN position values). Always increase the air first followed by the fuel angular positions.

12. Press E.G.A. to view the online combustion readings. If the readings are satisfactory go to step 14, otherwise go to step 13.

13. Press M.M. to make adjustments to fuel and/or air valve positions and go back to step 12.

14. Press ENTER MEMORY to enter the position.

The system will now carry out 'autotrim' routines. No operator intervention will be permitted during this time and will take approximately 2 minutes. While the auto commission is taking place the EGA and MM LEDs will flash initially to indicate the fuel rich period of the autotrim. Then run and MM will flash to indicate the air rich period of the auto commission. When finished INTER flashes or INTER and START flashes.

Note: Only INTER flashes if the number of INTER positions entered so far is less than or equal to three, there after INTER and START flash.

15. Press INTER or START

16. Use CH1 to CH6 to reduce the fuel and air positions. Always reduce the fuel first followed by the air angular position.

17. Press E.G.A. Observe the combustion readings. If the readings are satisfactory go to step 19, otherwise go to step 18.

18. Press M.M. to go back to the valve positions screen to make adjustments go to step 16.

19. Press ENTER MEMORY to confirm the positions of the fuel and air valves.

The system will now carry out 'autotrim' routines. No operator intervention will be permitted during this time. This takes approximately 2 minutes. While the autotrim is taking place the EGA and MM LEDs will flash initially to indicate the fuel rich period of the auto commission. Then run and MM will flash to indicate the air rich period of the auto commission. When finished INTER flashes or INTER and START flashes.

If the Position entered was the START position, go to step 21, otherwise go to step 20.

20. Press

or

and go to step 16.

21. Press

to set the system into normal modulating mode.

Note: If an EGA error occurs in commissioning mode, it cannot be reset using the press "close/open button." If the fault in the EGA can be cleared the error will reset automatically.

3.3.3 EGA Combustion Trim Operation

With the EGA trim facility it is possible to expand the MM so it will measure and display O2, CO, CO2 and exhaust gas temperature, together with boiler temperature or pressure. It is also possible to use these values for 3 parameter trim in order to optimise the burner combustion capabilities throughout the firing range of the burner in a safe manner. This means that the safety is never compromised by efficiency, but the best burner/boiler efficiency is maintained.

During commissioning, for every paired value of fuel and air, the corresponding values of O2, CO and CO2 are stored. These values are known as the commissioned values. The system will then automatically induce an 'autotrim' cycle in which the air damper will close 5% of the entered air damper position and then hold its position for 60 seconds. This is known as the fuel rich part of the autotrim cycle. After 60 seconds the values of O2, CO, CO2 are stored. The 60 seconds allows the combustion gases to move through the EGA in order to obtain new combustion values. After these values have been stored then the EGA will stop sampling from the stack for 25 seconds and sample from atmosphere (through the solenoid valve) in order to clear any CO residue that may have been produced during this fuel rich autotrim. During this time the air damper will now open 5% of the commissioned air damper position and following the air flush time the air damper will be held in this position for 60 seconds. This is known as the air rich part of the autotrim cycle. After the 60 seconds the values of O2, CO, and CO2 are stored. It is now possible to move to the next position in the fuel and air curve to be entered. This same process will occur for every fuel and air position entered. This builds up a complete map of the burner's combustion performances (see graphs in Section 3.3.6).

During the normal run mode, the on-line sample at any position within the burner's firing rate is compared to the commissioned values. There are 3 individually sampled parameters (O2, CO, CO2) in order to verify the combustion performance either side of the commissioned value. The software within the MM unit will inflict minute corrections to the channel 2 air damper positions or the channel 5 variable speed drive in order to maintain the commissioned values. These small changes ensure that the originally entered commissioning data is adhered to, irrespective of variations in stack pressure, ambient temperature/pressure fluctuations, barometric conditions or fuel pressure changes.

The system trim function is achieved by every paired value for air and fuel having stored values for O2, CO2, and CO at the commissioned value. Deviations from these ideal values are held and accessiable via the Combustion Map button the Mk7 MM. This data shows the commissioned values of the emissions, the current values of the emissions and the amount of trim that is being used.

3.3.4 Channel 5 Trim

When trim is set on channel 5, changing the Options will make a difference between errors occurring or not. For the purposes of trim, the Mk7 needs to know how the VSD will behave, in terms of: a change in the VSD input and its effect on the feedback (output) signal, which is why the VSD Options (90 – 97) must be set exactly – i.e. input/output voltage/current ranges and input/output min/max Hertz. If the system is already commissioned and if any of the VSD drive input/output voltage/current ranges or input/output min/max Hertz are altered then re-commissioning will be necessary as the stored feedback values for each MM entered point will now be incorrect. These stored feedback values are used by the MM as the starting point for working out the expected feedback signal – whether trim on channel 5 is optioned or not.

3.3.5 Trim Timing Operation

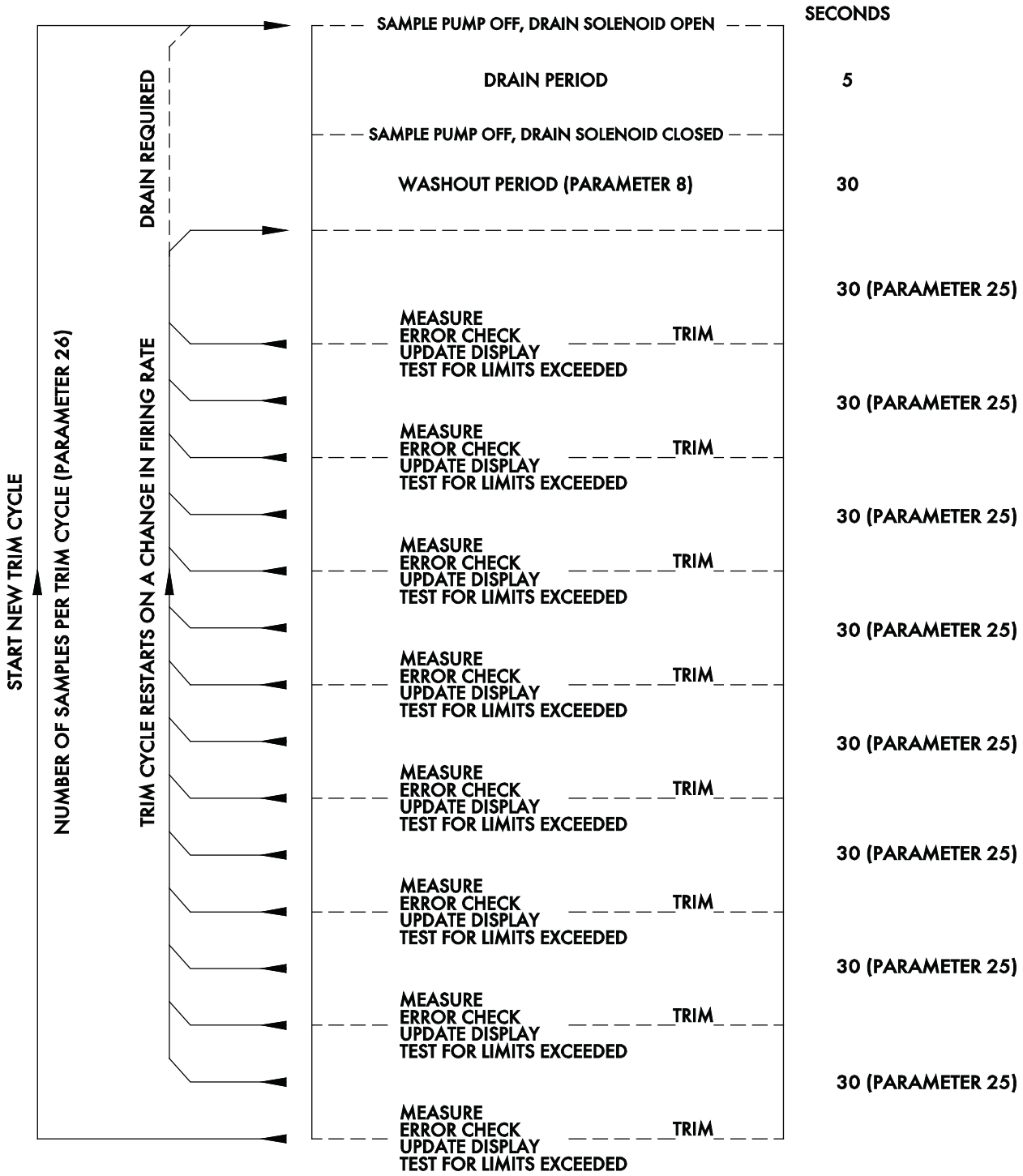

3.3.6 Graphical Trim Operation

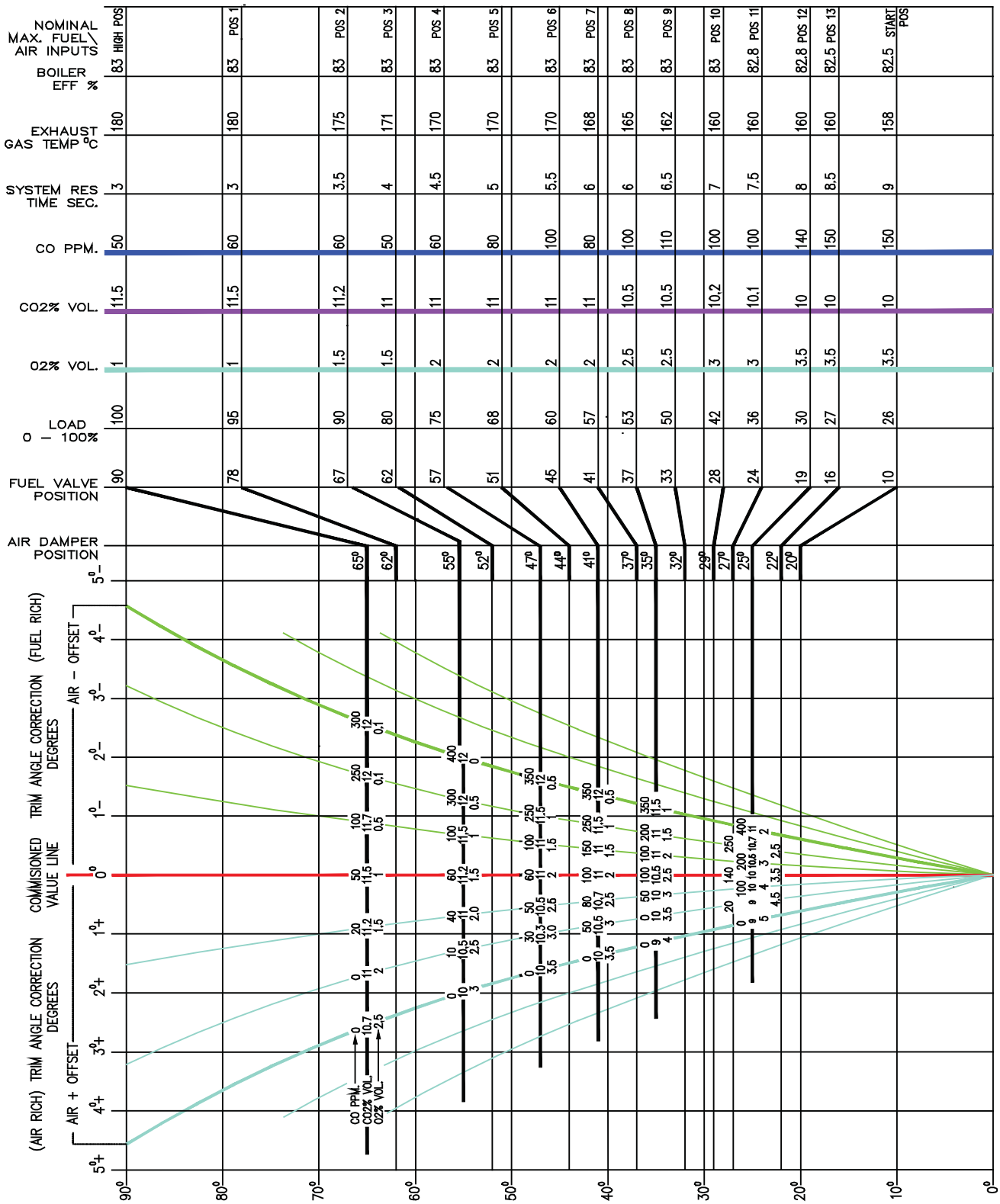

3.3.7 Combustion Efficiency Calculations

Based on dry gas.

English Calculation:

% Combustion Efficiency = 100 – (sensible heat loss + Hydrogen and moisture loss).

$$= 100 - \left[\frac{K1\ (TG\text{-}TA)}{\%CO2} + \left(K2\left(1121.4 + (TG\text{-}TA)\right)\right)\right]$$

K1 = 0.38 Natural Gas (F1/F4)
K1 = 0.56 Fuel Oil (F2/F3)

K2 = 0.0083 Natural Gas (F1/F4)
K2 = 0.0051 Fuel Oil (F2/F3)

European Calculation:

% Combustion Efficiency = 100 – sensible heat loss

$$= 100 - \left[(TG\text{-}TA) \times \left(\frac{A}{20.9 - \%O2} + B\right)\right]$$

A = 0.66 Natural Gas (F1/F4)
A = 0.68 Fuel Oil (F2/F3)

B = 0.009 Natural Gas (F1/F4)
B = 0.007 Fuel Oil (F2/F3)

TG : Flue Gas Temperature

TA : Ambient Air Temperature in Boiler House

Note: To use these equations temperatures must be converted to °C.

3.4 ERROR CHECKING, SELF DIAGNOSTICS

3.4.1 Keys to Errors Detected

Errors detected in the EGA part of the system are indicated when COM or EGA display modes are selected on the MM. In the event of an EGA failure, an error will appear on the EGA screen of the MM. All other screens on the MM are still viewable whilst there is an EGA error. The switched neutral alarm output Terminal 79 can be set to become active or remain inactive in the event of an EGA error (see Option 12 in Section 2.17.2.4). Depending on the setting of Option 12 will determine how the burner will operate, i.e. continue to run based on the original commissioned values (trim and limits testing disabled) or become disabled until the EGA error is reset and becomes fully operational once again.

Error Number	Fault Description
01	No Communications to EGA. Check communications between Terminals 23/31 on the EGA and Terminals 25/26 on the MM module. Ensure that the EGA is earthed (grounded)
08	O2 Upper Limit Exceeded Check Option 19 and Section 3.7.2
09	CO2 Upper Limit Exceeded Check Option 20 and Section 3.7.2
10	CO Upper Limit Exceeded Check Option 21 and Section 3.7.2
11	O2 Lower Limit Exceeded Check Option 22 and Section 3.7.2
12	CO2 Lower Limit Exceeded Check Option 23 and Section 3.7.2
14	O2 Absolute Value Exceeded Check Option 25 and Section 3.7.2
15	CO2 Absolute Limit Exceeded Check Option 26 and Section 3.7.2
16	CO Absolute Limit Exceeded Check Option 27 and Section 3.7.2
20	Pump Fault – Pump Failed/Sample System Blocked Check that the sampling probe is not blocked (filter in probe). Remove sample inlet tubing and press Open/Close buttons on the MM (Mk6 mode if using Mk7) via the EGA screen in order to force the unit into a re-calibration. If the error is cleared then the blockage is in the probe/sampling tube. If the error persists check the flow through the EGA module. Isolate each section and test the flow (this should be 550 – 650 cc/min). If error still persists then remove the inlet to the pump (lower pipe connection). If the error is resolved then check the filter (Section 3.4.3) and sampling line with the EGA. If error persists replace the pump.

21	O2 Cell Failure Check terminal voltage on the wires from the cell
22	CO2 Cell Failure Check terminal connections on the wires from the cell Ensure the temperature sensor is plugged in (right side of the cell)
23	CO Cell Failure Check Terminal connections on the wires from the cell
30	NO Upper Limit Exceeded Check Parameter 94 and Section 3.7.2
33	Exhaust Temperature Upper Limit Exceeded Check Parameter 96 and Section 3.7.2
35	Exhaust Temperature Absolute Limit Exceeded Check Parameter 97 and Section 3.7.2

Should the fault require the EGA to be returned to Autoflame ensure the EGA sampling system should be carefully packed into the carton in which it was supplied and marked "Fragile – Scientific Instruments" and "Do Not Drop".

It is possible to remove and re-install the EGA at a later date without the burner needing to be re-commissioning if using the trim function with an MM module. After removing the EGA set Option 12 on the MM module to 0. Once the EGA module is ready to be re-installed reset Option 12 back to the required setting, provided the combustion has not been changed either through commissioning mode or single point change the MM module will load up as normal and will not be required to be re-commissioned.

When an error code appears on an MM module it is required that the error is reset on the MM module as well as the EGA. If the error is not reset on the MM module then the EGA and MM will not communicate with each other until the error is reset. This will mean the EGA will display "No Fuel Selected" when in run with MM mode until the error is reset on the MM module and communications restored.

When first going into commissioning mode, the MM invokes an EGA calibration. If an error occurs at this stage it will be necessary to fix the error and restart the commissioning procedure.

3.4.2 Other Possible Problems

On the MM display there are 4 lines of text that may appear when the EGA is awaiting various parameters to be met.

1. Ambient Temperature – This will read Ok, High or Low. This must be between 5 – 40C (40 – 140 F) or the settings of Parameters 27/28. The temperature is measured by a sensor on the electronics PCB and is cross referenced with the sensor on the side of the CO2 cell.

2. EGA Trim Threshold – This will be Ok or Low and is looking at the setting of Option 28. This value is an offset from the set point, before which the EGA will not operate. This ensures that the EGA does not pull in high amounts of condensation.

3. Chiller – This will be Ready or Not Ready. There is a temperature sensor on the chiller unit and this chiller must get down to a set temperature before the pump will start to draw a sample from the stack. If the chiller is not decreasing its temperature then check the operation of the fan. When the EGA is powered the fan is the first component to start-up and the purpose of this is to cool the chiller unit. Ensure that the door of the EGA is closed and that the 24V DC is present on the fan. If the ambient air in the boiler house is high, it may be necessary to draw cooler air into the EGA. Check that the cable to the right if the chiller is connected and all pins follow through. Check the voltage selector switch is set to the correct voltage, i.e. if set for 230V and the mains input is 120V, the fan will run slowly and not cool the unit.

4. Comms – This can read Ok or Not Ok and this is checking for continuity between the EGA and MM. Check the wiring between the MM and EGA modules.

3.4.2.1 Fuse Keeps Blowing

If the EGA is mounted in an excessively dusty environment a build up of particles on the terminals can cause arcing. If the particles are corrosive then any attack to the conformal coating on the printed circuit boards can cause tracks to arc and component failure. Any sign of this activity and the unit should be returned to the supplier.

3.4.2.2 Continuous O2 Reading at 23%

Check all piping is airtight.
Check sample tube is not blocked.
Check that there are no leaks on the flue.
Check the Pinch Valve tubing for leaks.

3.4.3 Assembly of Dry Filter

If pump faults are occurring on the EGA it is advised to check the dry filter in the EGA and check it for any blockages and make sure that the filter material has not become saturated.

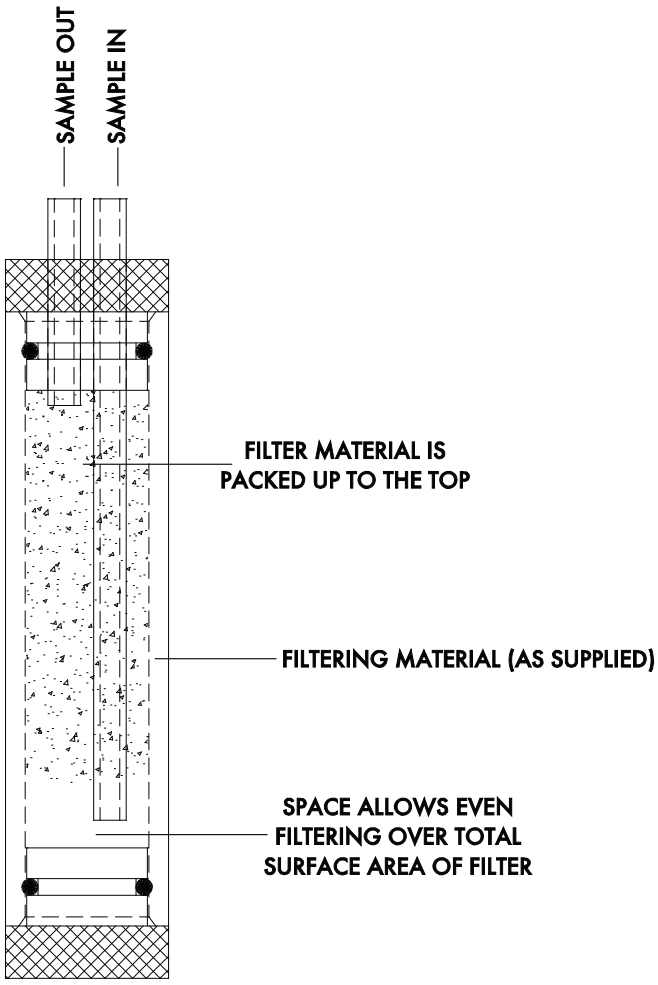

N.B. FREE SPACE MUST BE LEFT AT BOTTOM TO STOP ANY PREMATURE BLOCKAGE
THE SAMPLE IN & OUT PIPES MUST BE CONNECTED CORRECTLY OR BLOCKAGE
WILL OCCUR WITHIN A FEW HOURS.

3.5 ELECTRICAL SCHEMATICS

3.5.1 Interconnection between EGA and MM module

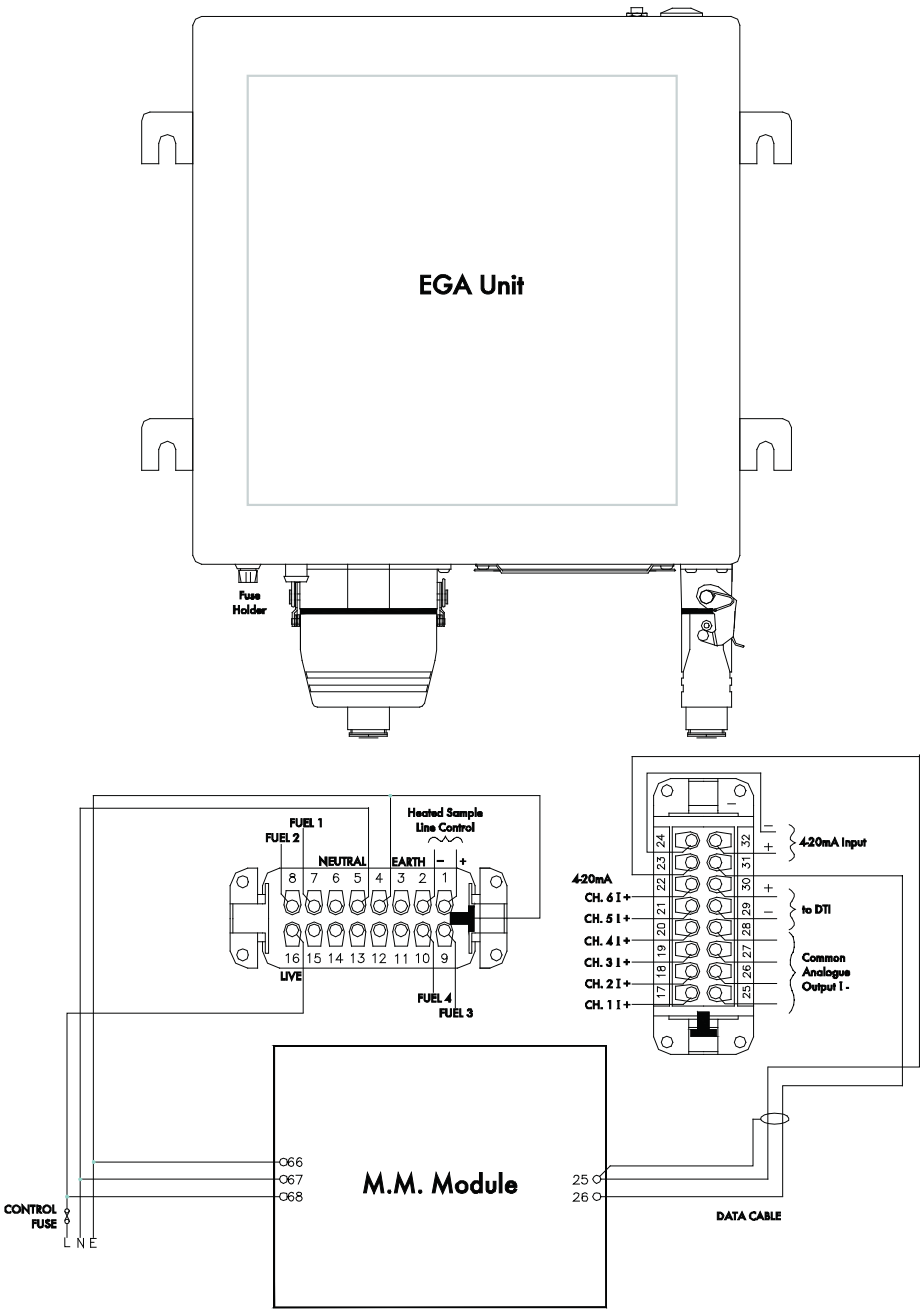

3.5.2 Interconnection Between Stand Alone EGA Modules and DTI Unit

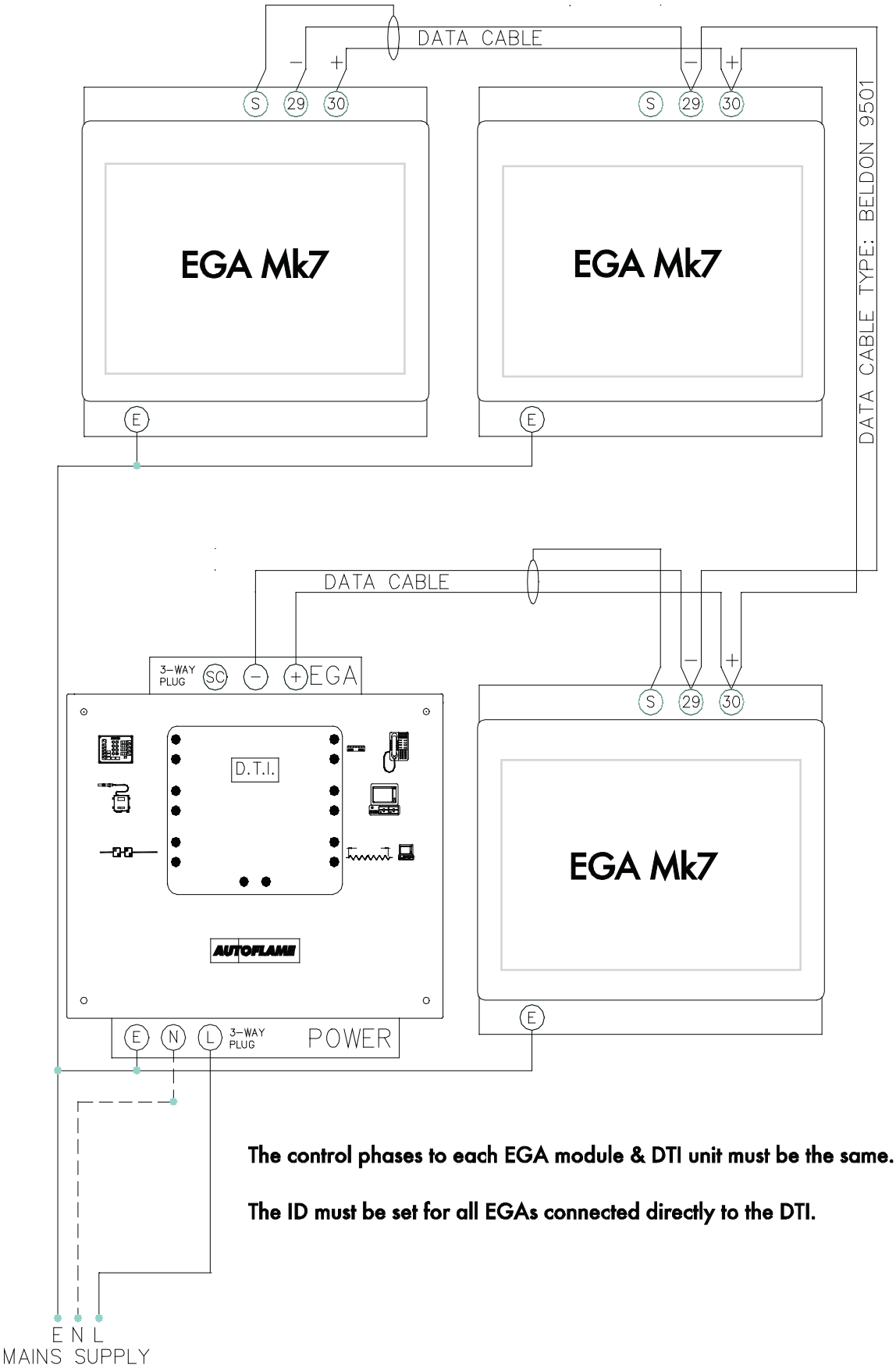

The control phases to each EGA module & DTI unit must be the same.

The ID must be set for all EGAs connected directly to the DTI.

3.6 INTERACTING WITH THE MK7 EGA INTERFACE

3.6.1 Sampling Screen

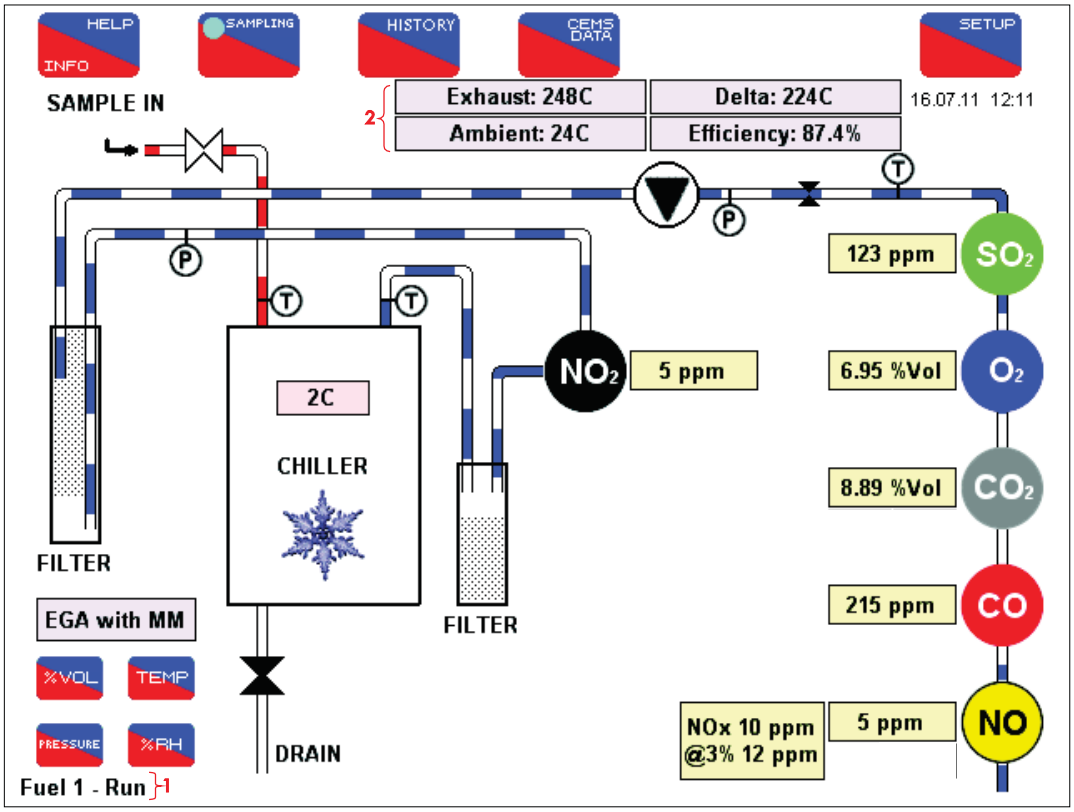

Figure 3.6.1 Sampling Screen

The sampling screen presents the user with detailed information about the current operation of the EGA. Components shown on this screen:

1. Fuel being fired and current EGA status (Air calibration, run etc.)
2. Exhaust: Temperature of the exhaust gas.
   Ambient: Ambient temperature of the air surrounding the EGA.
   Delta: Difference between the exhaust and ambient temperatures.
   Efficiency: Current burning efficiency (See Section 3.3.7 for efficiency equations).

Cells

Carbon Monoxide

Nitric Oxide

Oxygen

Carbon Dioxide

Nitrogen Dioxide

Sulphur Dioxide

System Components

	Piping (no flow)		Piping (gas flowing)
	Piping (water/condensate draining or air sample flowing)		Pump
	Pinch Valve Open		Pinch Valve Closed
	Temperature Sensor		Pressure Sensor
	Chiller Status		Restrictor

Note: Components that are not ready/malfunctioning are denoted by a

Display Buttons

%VOL	Concentration display button	TEMP	Temperature display button
PRESSURE	Pressure display button	%RH	Relative humidity display button

Typical Readings

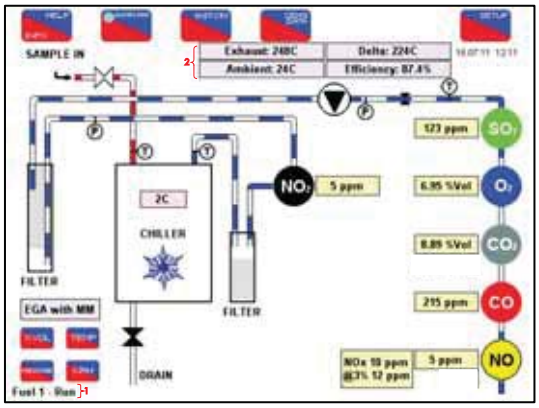

Concentration
Standby

O2: 20.9 %
CO: 0 ppm
CO2: 0 %
NO: 0 ppm
SO2: 0 ppm
NO2: 0ppm

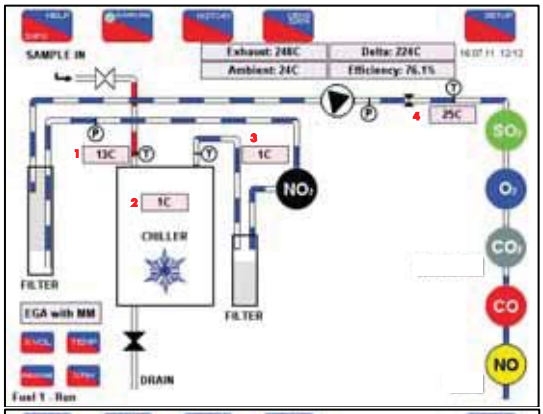

Temperature

At 1: Below ambient
At 2: Around 2°C/ 36°F
At 3: Varying – though usually higher than 2.
At 4: Around Ambient

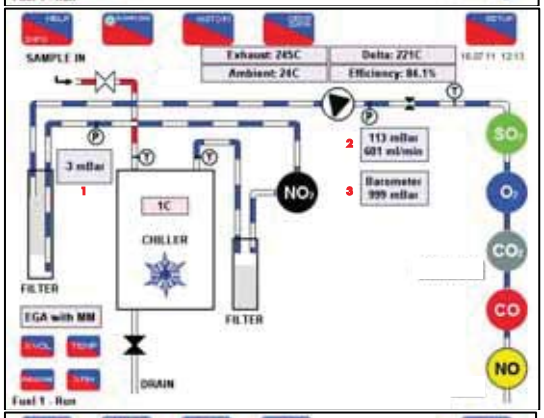

Pressure

At 1: -5mBar to 0mBar
At 2: 110mBar to 120mBar
Approx. 600ml/min
At 3: Barometer – Varies with ambient conditions.

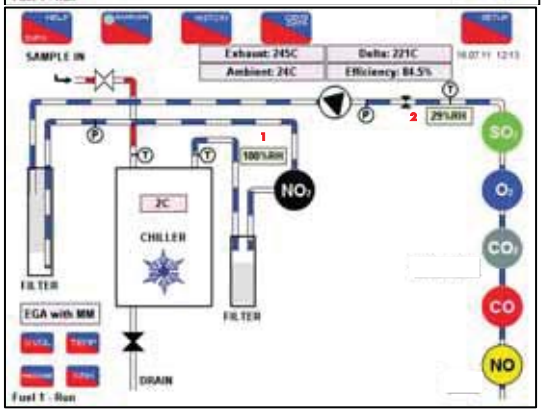

Relative Humidity - RH

At 1: 100%
At 2: 25 – 30%

3.6.2 Emissions History Screens

- Pressing this button opens up the emissions history screens. Pressing this button will bring up the recent gas emissions history screen.

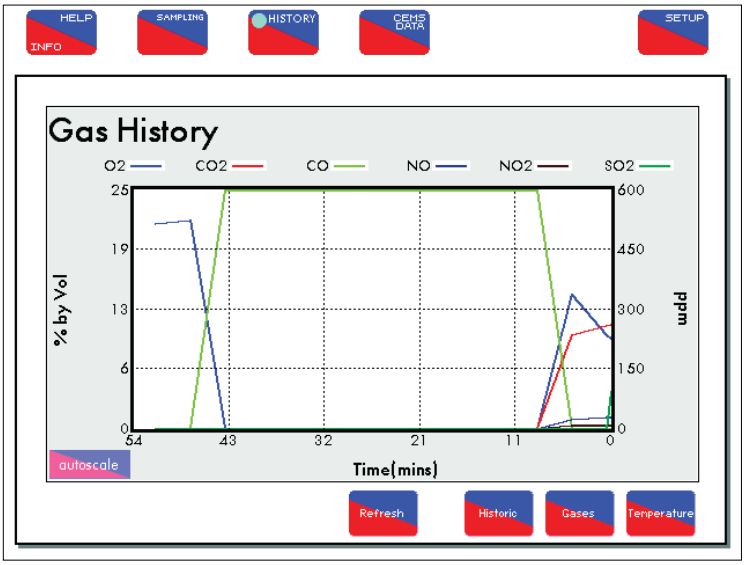

The graph displays the concentration of each gas for the last 24 hours. This graph can be manipulated by pressing on the axis and moving the axis to either expand the graph or focus in on certain points of the graph. It is possible to select/deselect which gas concentrations are shown on the graph by pressing which gas you wish to select/deselect at the top of the graph.

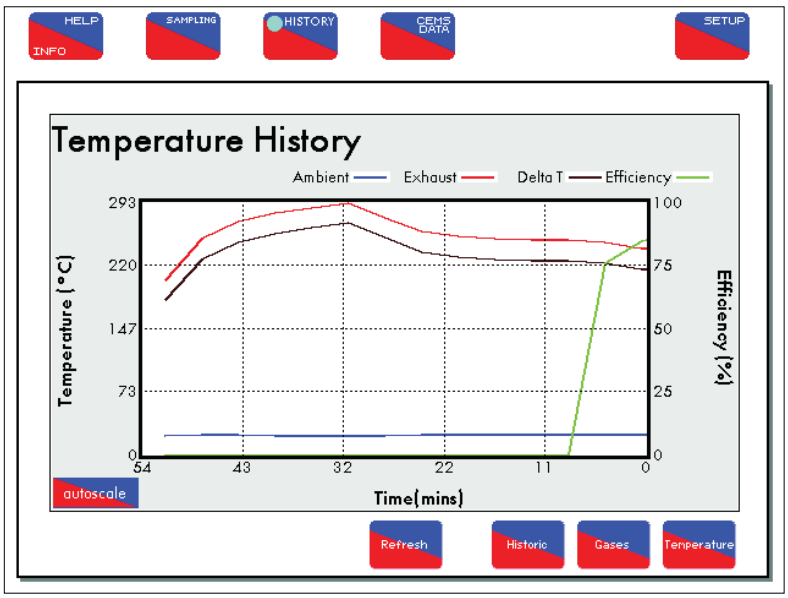

Pressing the

button will display the recent temperature history graph. This graph shows the ambient temperature, exhaust temperature, delta T and effecicney from the past 24 hours. As with the gas history graph the graph can be manipulated and it is also possible to select/deselect what data is shown on the graph.

Historic Screens

Pressing the

button will display the displays the gas concentration and firing rate information for the past 365 days. This information is sepreated across four levels: yearly, monthly, weekly and daily.

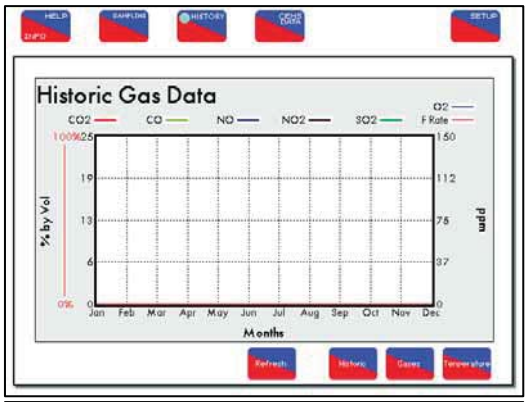

Yearly – The first screen displayed shows the gas and firing rate information for the past 365 days, split into months. To display all data for a particular month press the vertical line corresponding to the desired month. The graph will be updated to show data for that month.

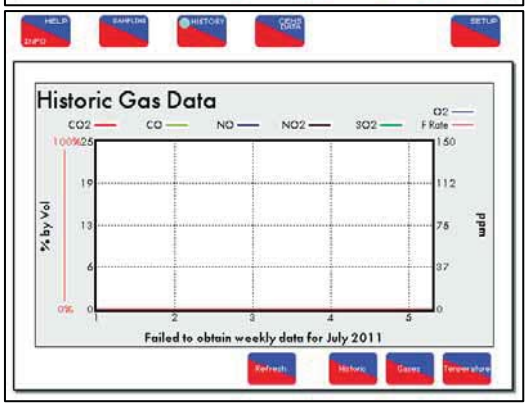

Monthly – The monthly data is split into weeks. To view the data for a particular week, press on the vertical line corresponding to the desired week.

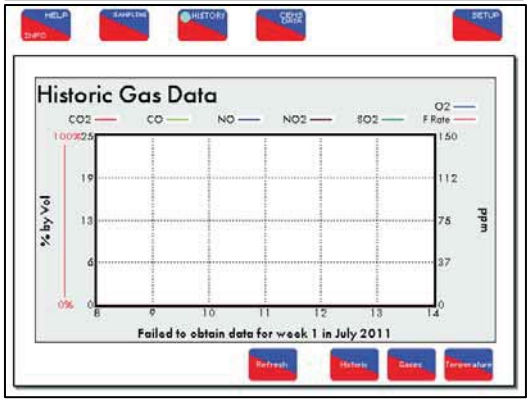

Weekly – The weekly data is shown as the 7 separate days for that week. To view the data for each individual day press on the vertical line that corresponds to the day you wish to view.

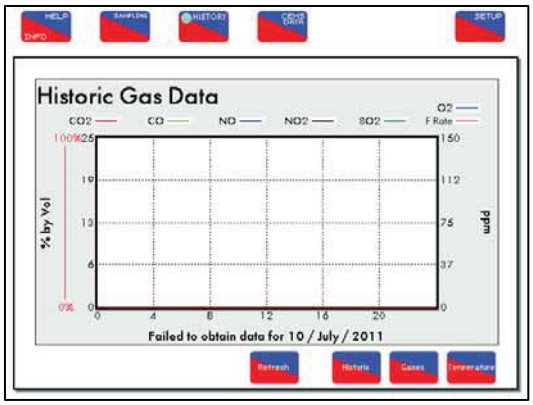

Daily – The daily data shows the 24 hour data for the day selected. To return to the yearly view press the

button again.

3.6.3 CEMS Screen

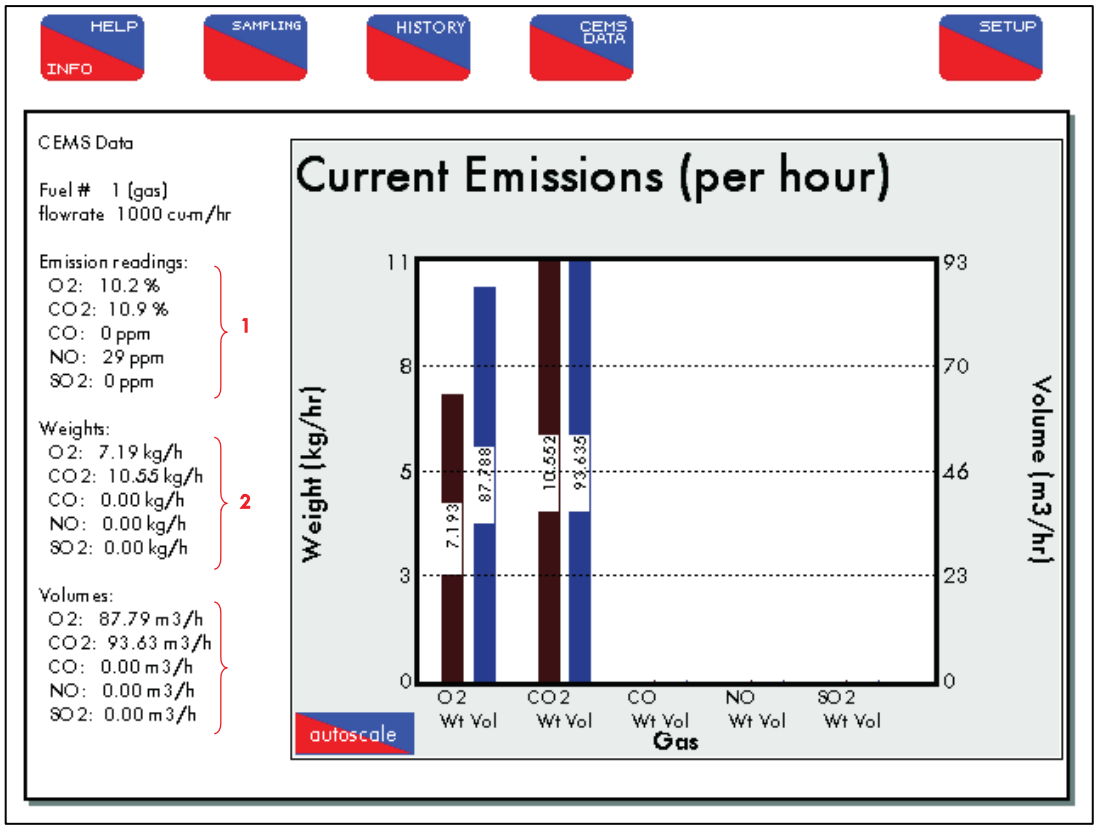

Figure 3.6.3 CEMS Screen

The Continuous Emissions Monitoring screen provides instantaneous emissions data for the current fuel being fired and the calculated hourly emissions. This information is displayed in the following way:

1. Instantaneous emissions.
2. Hourly emissions by weight.
3. Hourly emissions by volume.

The graph displayed provides a visual representation of this data.

3.6.4 EGA Settings

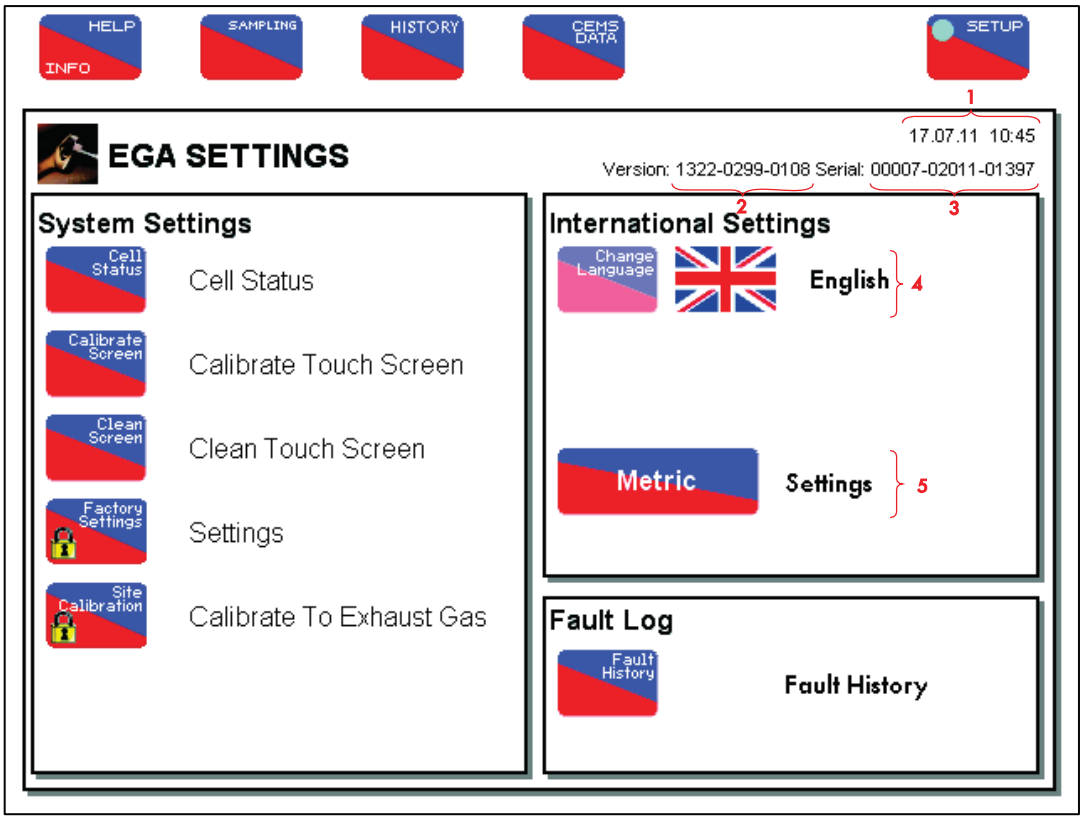

Figure 3.6.4 EGA Settings Screen

The EGA settings screen is the first of two main settings screens. It displays the following information:

1. Date and time.
2. Software versions.
3. Serial number of the unit.
4. System language.
5. Units being used (Imperial/Metric).

Note: Buttons with the symbol are password protected. By default the password required to access Factory Settings is **EGA**. This password can be changed, see Section 3.6.13.

Change Language — Press this button to change the language.

Metric or Imperial — Press either of these buttons to toggle the units used by the system. The text displayed indicates the unit currently selected.

Calibrate Screen — Press here to calibrate the touch screen. Follow the on screen commands to calibrate the touch screen.

Clean Screen — Press this button to clean the touch screen. Pressing this button will lock the screen for 30 seconds to allow the screen to be cleaned.

3.6.5 Cell Status Screen

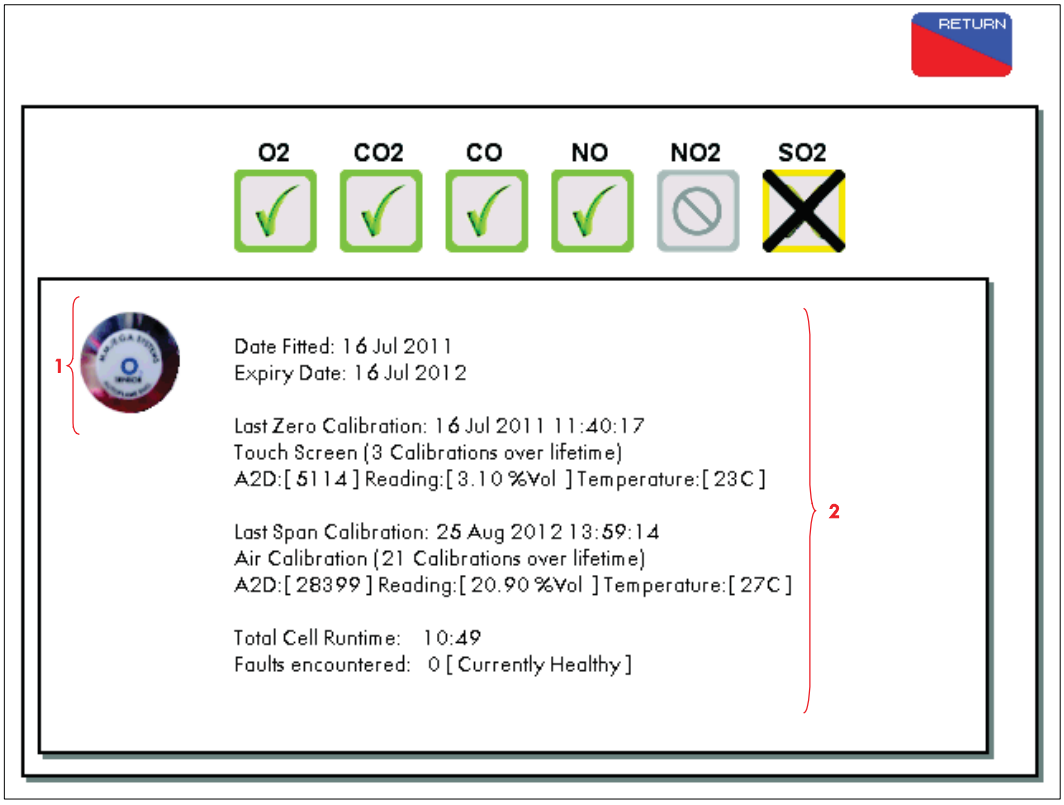

Figure 3.6.5 Cell Status Screen

The cell status screen displays information of all fitted cells. This information is arranged as follows:

1. Image of the cell currently selected.
2. Detailed information on the cell currently selected.

The status icons are:

OK – Indicates the cell is healthy.

Not Fitted – Indicates the cell is not fitted. Refer to Section xxxx on how to enable cells if they are present.

Error – Indicates there is an error with the cell. Press to get further information.

3.6.6 Fault Log

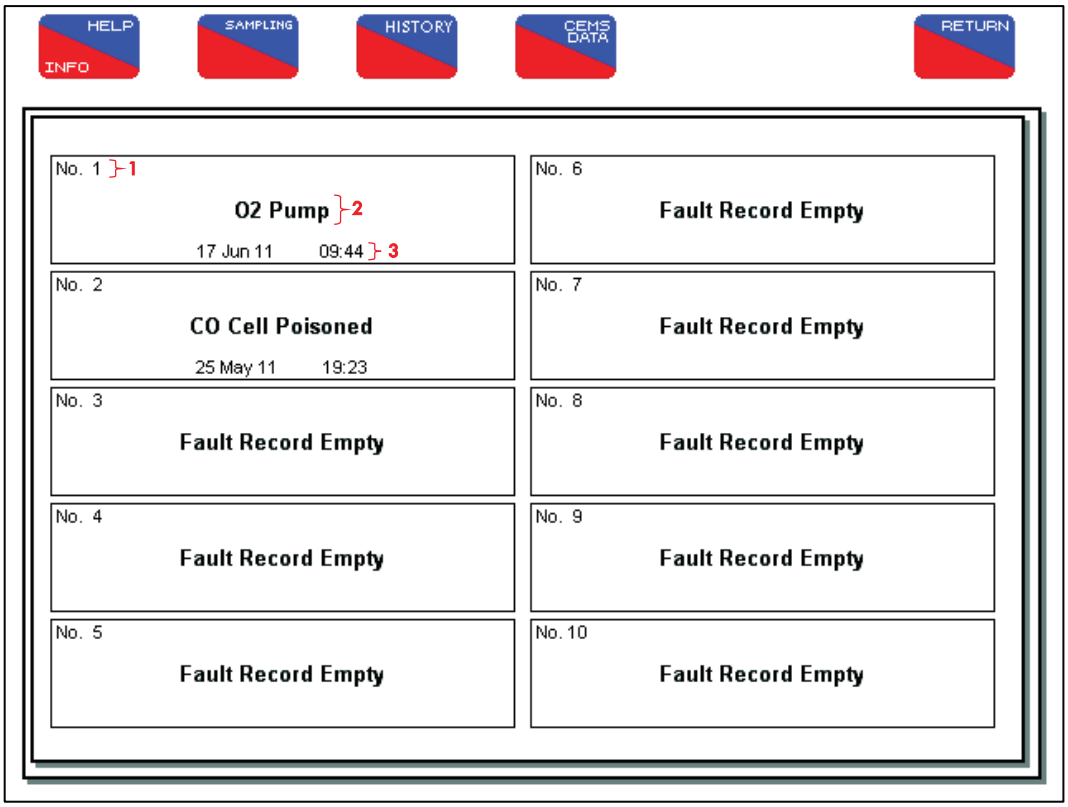

Figure 3.6.6 Fault Log Screen

When a fault is detected a popup box will appear with information on the error. This error is then logged onto the Fault Log and can be accessed at any time by pressing the

button on the settings screen.

The last 10 faults are logged on this record and can be downloaded through an MM (if used). Each fault contains the following information:

1. Fault number (in reverse chronological order).
2. Type of fault.
3. Date and time at which the fault occurred.

See Section 3.4 for possible faults and solutions.

3.6.7 Factory Settings Screen

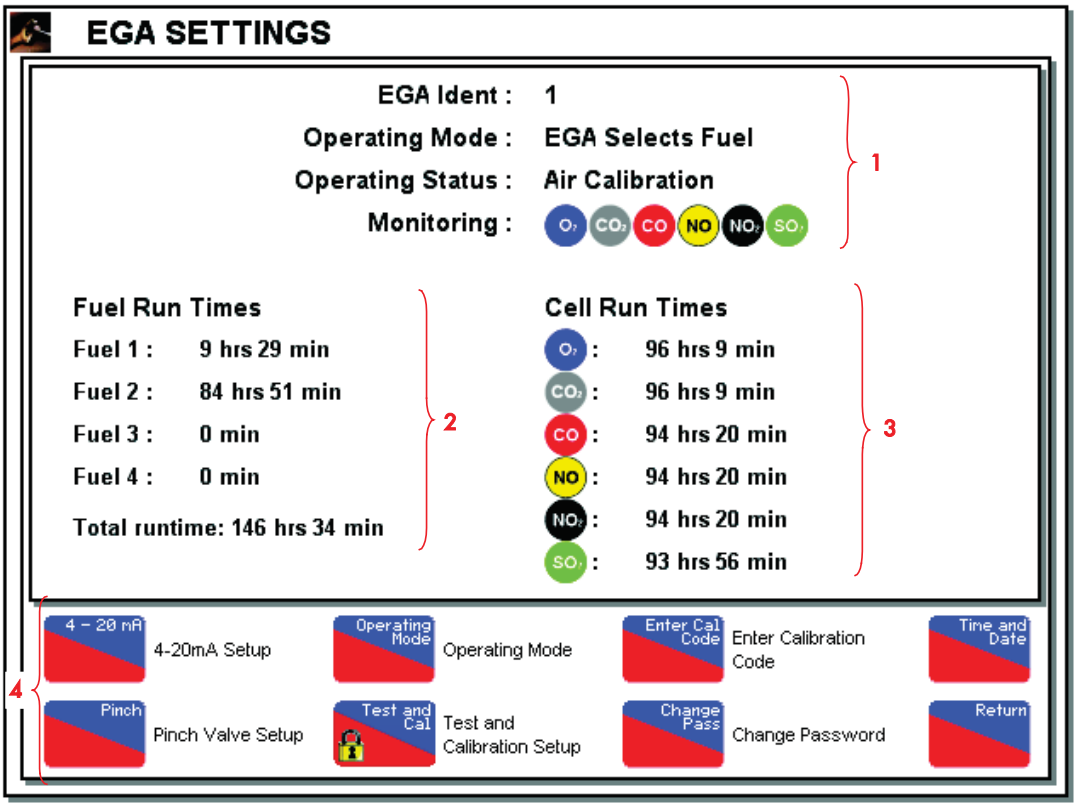

Figure 3.6.7 Factory Settings Screen

To access this screen press the

button from Figure 3.6.4 and enter the password on the keypad displayed. The default password is **EGA**.

Upon entering the factory settings screen, an overview of the EGA since first start-up will be displayed. The factory settings screen displays the following information:

1. The EGA ID, current operating mode, EGA status and cells selected.
2. The run times for each fuel and totalised run time.
3. Each cells run time.
4. Navigational Keys.

Use the navigational keys to select the following screens.

3.6.8 4-20mA Setup

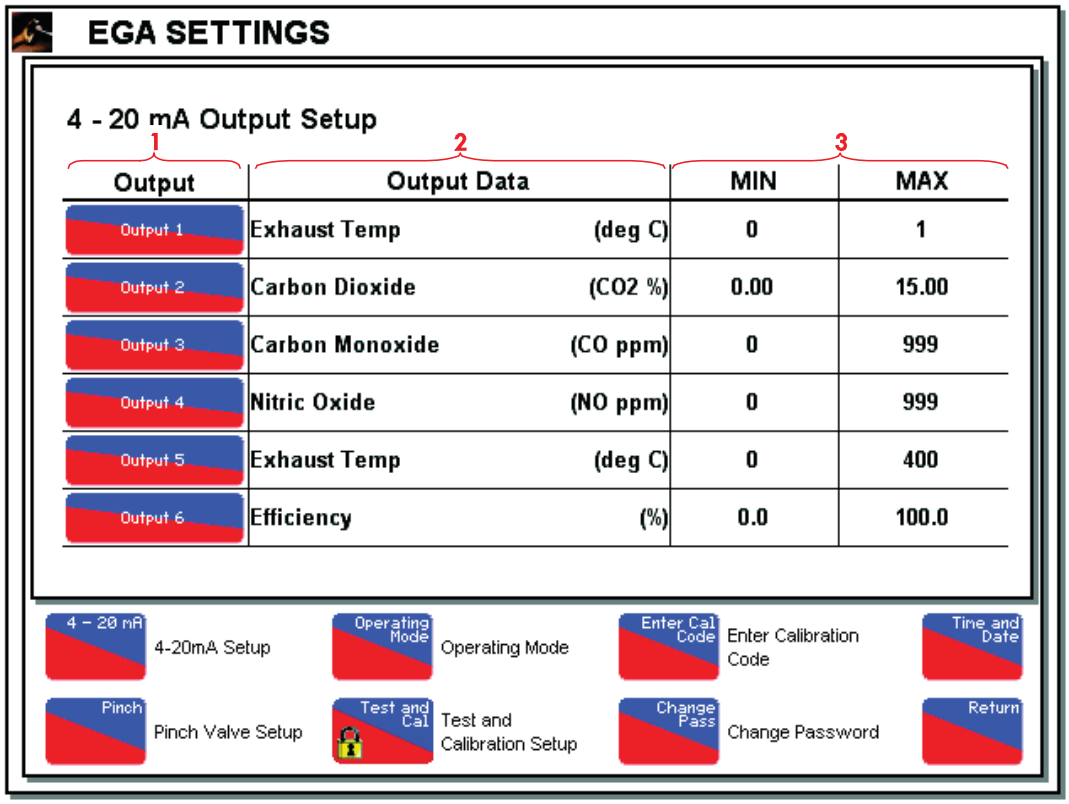

Figure 3.6.8 4-20mA Setup Screen

Press the 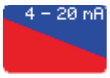 button to display the screen above. The above screen is used to set-up the 4-20 mA outputs from the 4-20mA terminals specified in Section 3.5.1. The 4-20mA setup screen has the following layout:

1. Output number.
2. Data to be outputted with units being used.
3. Minimum and maximum value of outputted data (range).

To setup each 4-20mA output:

1. Press . This will display a menu showing all possible data types that can be outputted.

2. Select the desired data to be outputted by pressing on the appropriate button from the menu.

3. A number pad will now appear allowing the minimum value of the data selected to be entered. Enter the minimum value on the key pad followed by to confirm. If the value is entered incorrectly press the button on the keypad to delete the last number entered. To cancel entering the minimum value press the button.

4. Once the minimum value has been entered the system will require the maximum value for the data to be entered. This is the same procedure as entering the minimum value.

5. Repeat steps 1 to 4 for each output as desired. **Note:** All changes will be stored if immediate effect.

3.6.9 Operating Mode

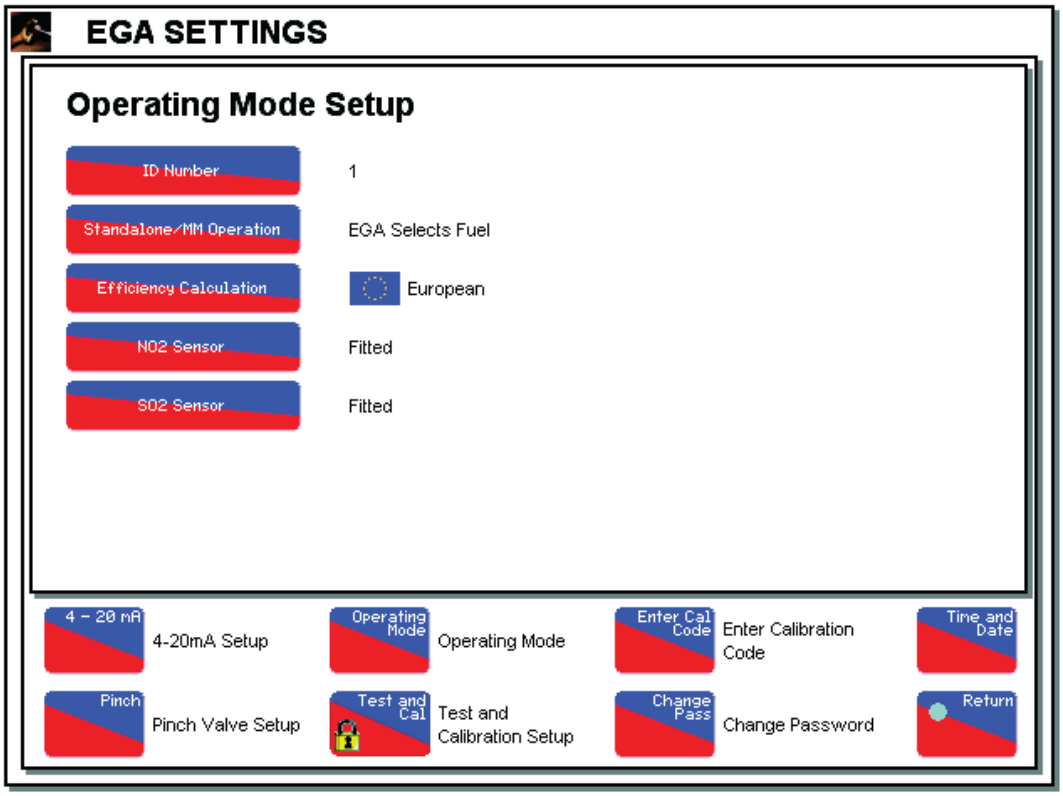

Figure 3.6.9 Operating Mode Screen

Pressing the mode button will display the above screen. The Operating Mode screen is used to setup the EGA. The following settings can be changed at this screen:

1. ID number (1-10). If using an EGA in standalone mode with a DTI it is necessary to give each EGA a different ID number.
2. Mode of operation (EGA with MM, EGA selects fuel).
3. Efficiency calculation (European, English).
4. Presence of NO2 and SO2 cells (Fitted, Not Fitted).

To change any of the settings above, press the corresponding button and select from the available options.

3.6.10 Cell Calibration

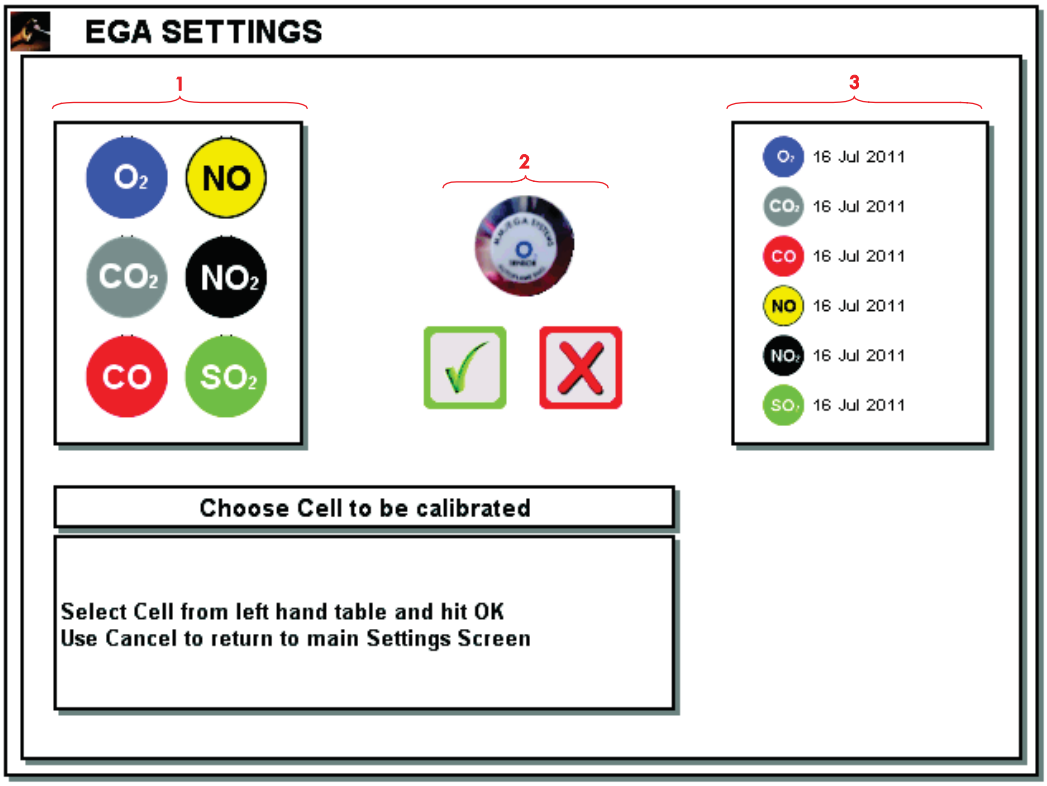

Figure 3.6.10 Cell Calibration Screen

Pressing the

button will display the screen above. This screen is used to calibrate cells using calibration codes and is divided into three main sections.

1. Available cells.
2. Currently selected cell
3. Each cells date of last calibration.

To return to the previous screen press the button.

To enter a calibration code follow the steps below:

1. Select the cell to be calibrate by pressing on the cell symbol from the section labelled 1 above.
2. Verify the correct cell has been selected with the image shown in section 2. Press the button to begin entering the calibration code.
3. A keyboard will appear allowing the cell code to be entered. Enter the 30-digit cell code supplied by Autoflame on the keyboard.

   Note: The cell code is case sensitive. Use the

button to switch between upper case and lower case.

4. Once all 30 digits have been entered the keys will be disabled. Ensure the code has been entered correctly. If a mistake has been made use the Del to delete digits. If the code has been entered correctly press the Accept button to confirm the entered button. Alternatively press Cancel to discard the entered code and return to the previous screen.
5. A text block will now appear to confirm if the code has been accepted or was incorrect. Press the ✓ button to return to the factory settings screen.

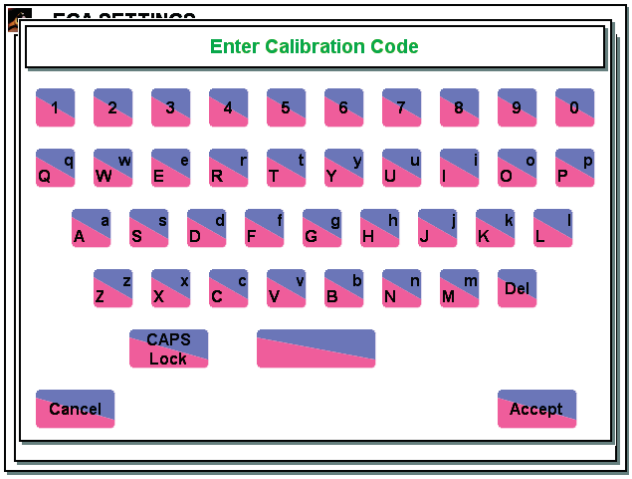

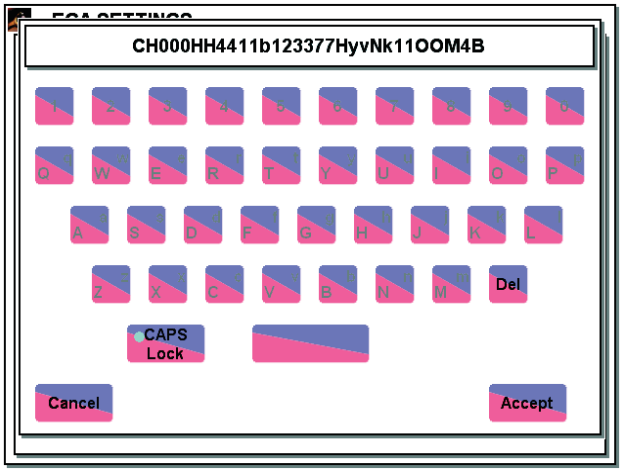

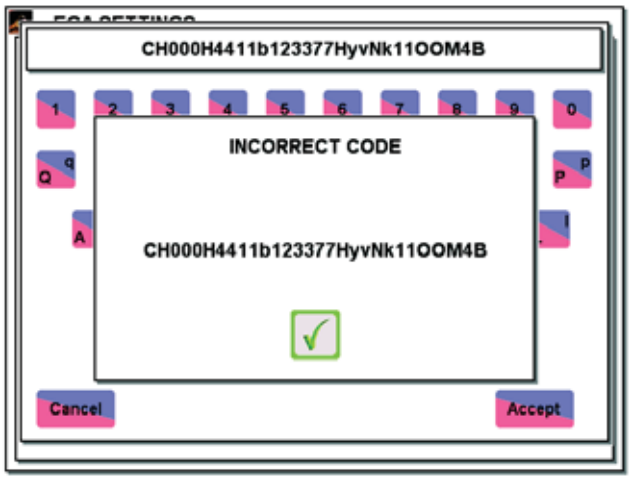

3.6.11 Time And Date

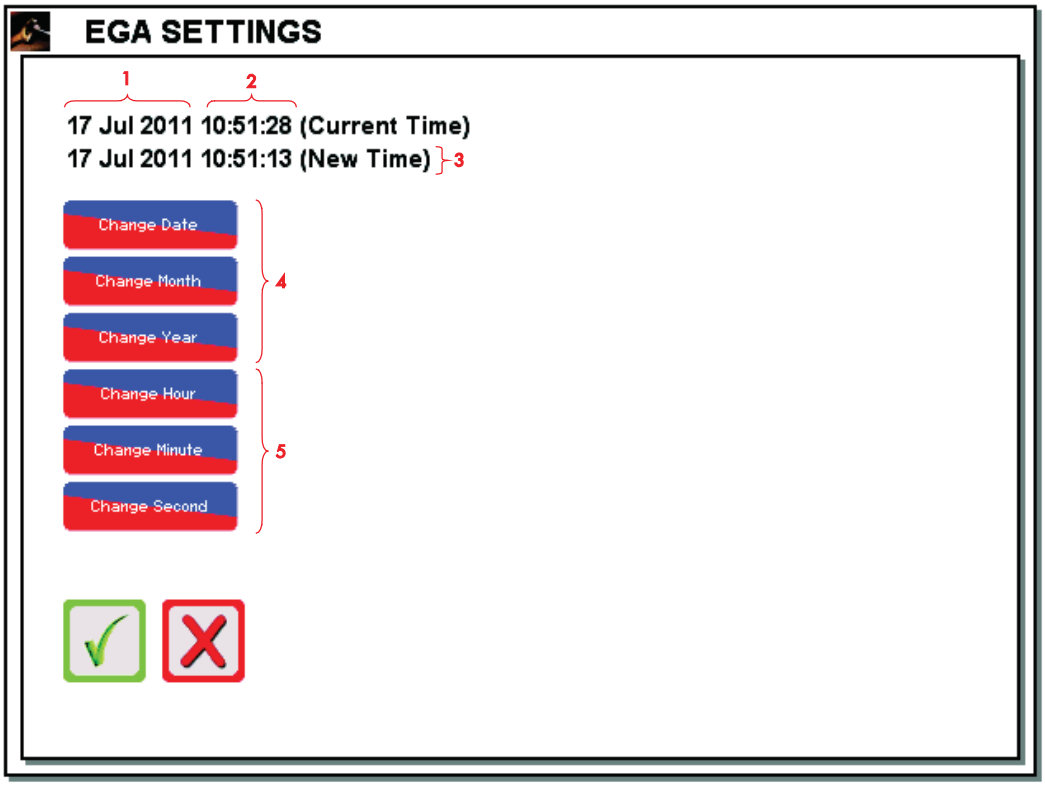

Pressing the

button will display the screen above, where it is possible to change the time and date. The screen displays the following:

1. The currently set time.
2. The currently set date.
3. The new time and date to be set.
4. Buttons to set a new date.
5. Buttons to set a new time.

To change the time or date press the relevant button to what you want to change. Enter the required value into the keypad that appears. Each button has the following ranges:

Range: 1 – 31

Choose from the available options.

Range: 0 – 99 (20## is automatically appended upon entering the value).

Range: 0 – 24.

Range: 0 – 59.

Range: 0 - 59.

3.6.12 Pinch Valve Setup

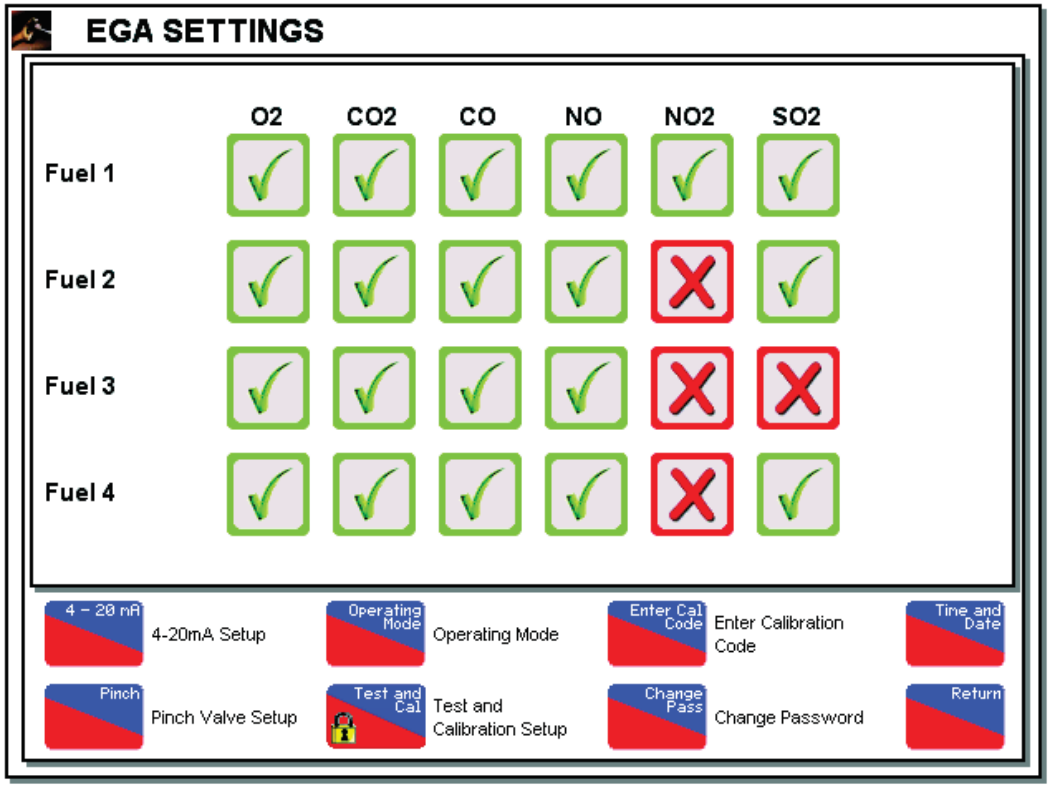

Pressing the button will display the screen above. On this screen it is possible to select which cells will sample on up to four different fuels.

To enable/disable a cell for a particular fuel press on its status button.

- Cell to sample.

- Cell not to sample.

Note: O2 and CO2 cells cannot be disabled.

3.6.13 Change Password

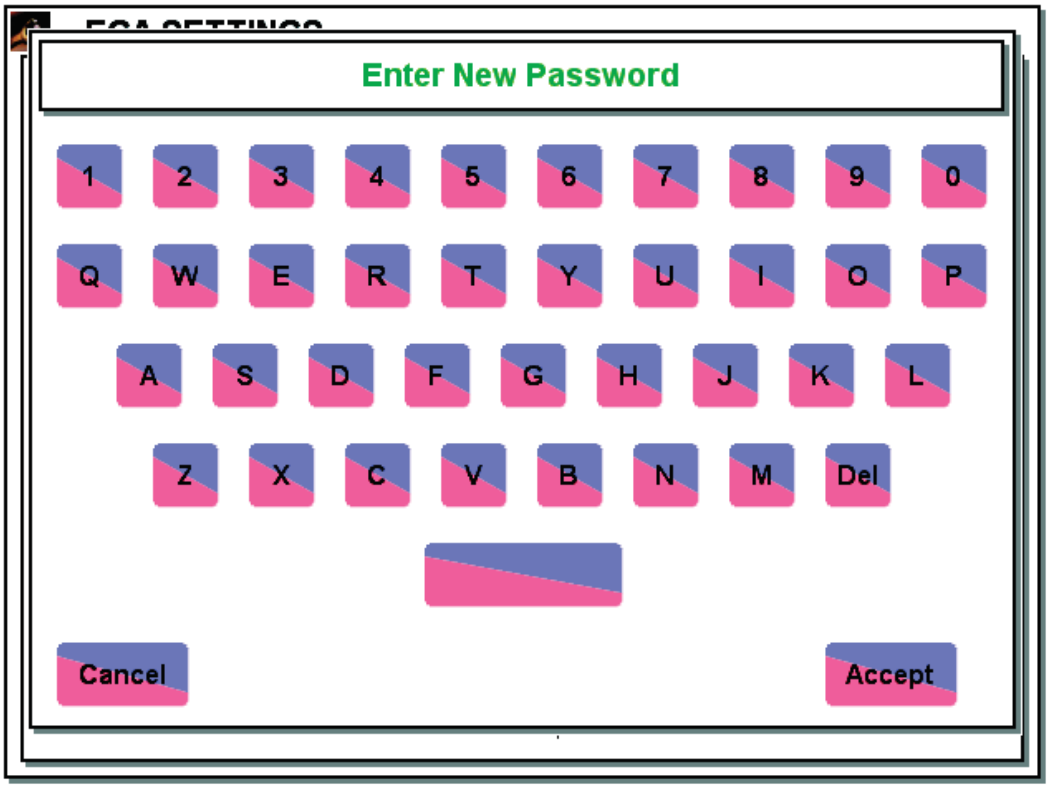

It is possible to change the password from its default by pressing the

button. To exit this screen without changing the password press the 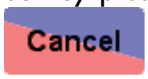

button at any time. To proceed with changing the password:

1. Enter the new desired password using the keyboard. Note this password down for future reference.
2. Press

.
3. A prompt stating "Retype New Password" will appear. Re-enter the password entered in 1 and press 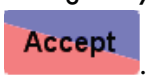

.

If the passwords entered in 1 and 3 are identical a box will appear stating "Password Changed". Should the passwords not match or if the

button is pressed a box will appear stating "Password Not Changed".

3.6.14 Test and Calibration Setup

This button is password protected as denoted by the symbol. This screen contains options and data that is only required by Autoflame Engineers.

3.7 LIMITS ON FIVE MEASURED COMBUSTION PARAMETERS

3.7.1 Overview of Limits of Combustion: Features and Benefits

The limits of combustion are only available when the EGA system is used with an MM controller and further extends the application and control possibilities of the system. The limits of combustion allow the end user or commissioning engineer to insert upper, lower and/or absolute limits on 5 parameters: O2, CO2, CO NO and exhaust gas temperature.

Either configuration is a user variable selection via the Options and Parameters on the MM controller (Options 19 – 27, Parameters 94 – 97). Option 12 on the MM controller must be set so that the limits of combustion are checked before the burner is commissioned.

3.7.2 Standard Limits

Standard limits are a set percentage volume, ppm (parts per million) or temperature above or below the commissioned values of O2, CO2, NO and exhaust gas temperature. In the case of CO, it is a specific amount of ppm above the commissioned value. These values are entered when commissioning of the EGA system has been completed throughout the load index of the burner.

3.7.3 Absolute Limits

Absolute limits are a specific percentage volume, ppm or temperature. In this form only an ultimate low value may be put on O2 and exhaust gas temperature in percentage volume and temperature respectively. In the case of CO2 only an ultimate high value may be entered in percentage volume. For CO and NO a ultimate high in ppm may be entered.

These values are entered when commissioning of the EGA system has been completed throughout the load index of the burner to avoid the burner locking out when commissioning.

3.7.4 Limits of Combustion Control Functions

Using Option 12 on the MM controller it is possible to have two distinct control functions on how the system will react when the limits of combustion are exceeded.

Control Function 1

Once the limits of combustion are exceeded the trim function is disabled automatically and the system runs on the fuel air ratio positions that the MM controller was commissioned on. A error will also appear on the MM controller and until the error is reset on the MM controller the trim function will remain disabled until the error is reset even if the limits of combustion are no longer exceeded.

Control Function 2

Once the limits of combustion are exceeded the MM controller will lockout i.e. turns the burner off. The MM controller will also display an error message and until the error is reset on the MM controller the system will remain in a lockout condition.

The following drawings give a graphical representation of how the standard limits of combustion works.

3.7.5 Example of Limits on O2 Measurements

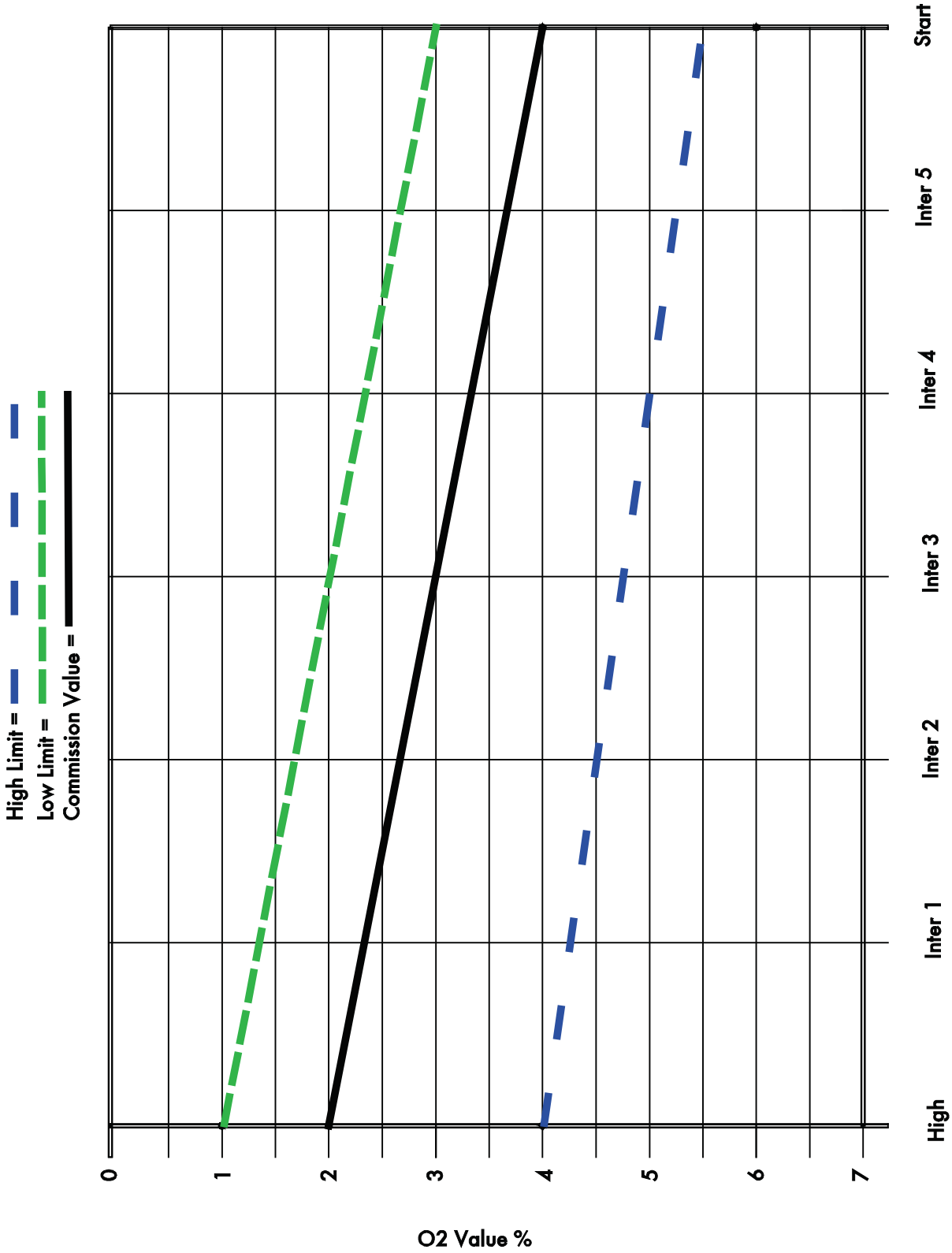

3.7.6 Example of Limits on CO2 Measurement

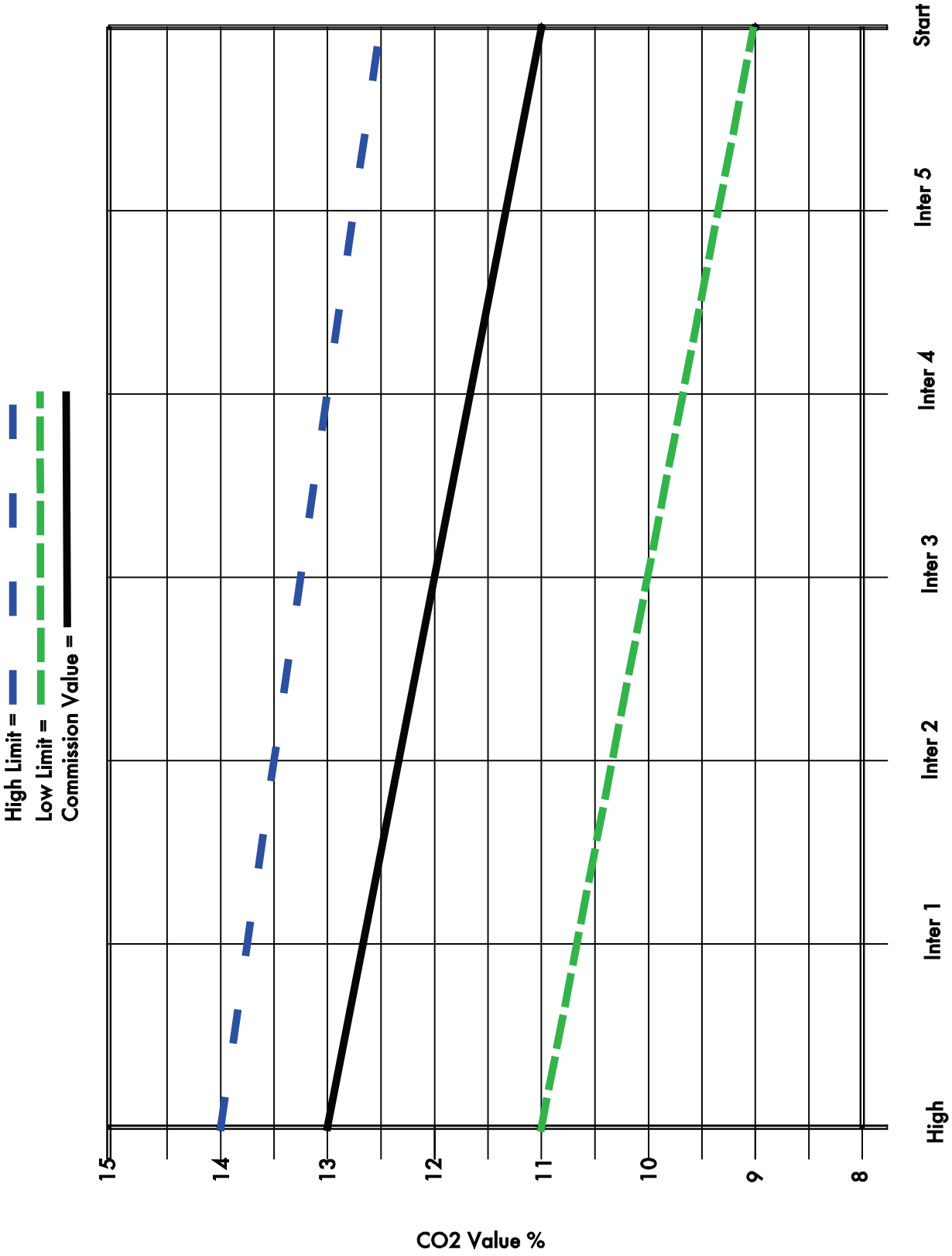

3.7.7 Example of Limits on CO Measurement

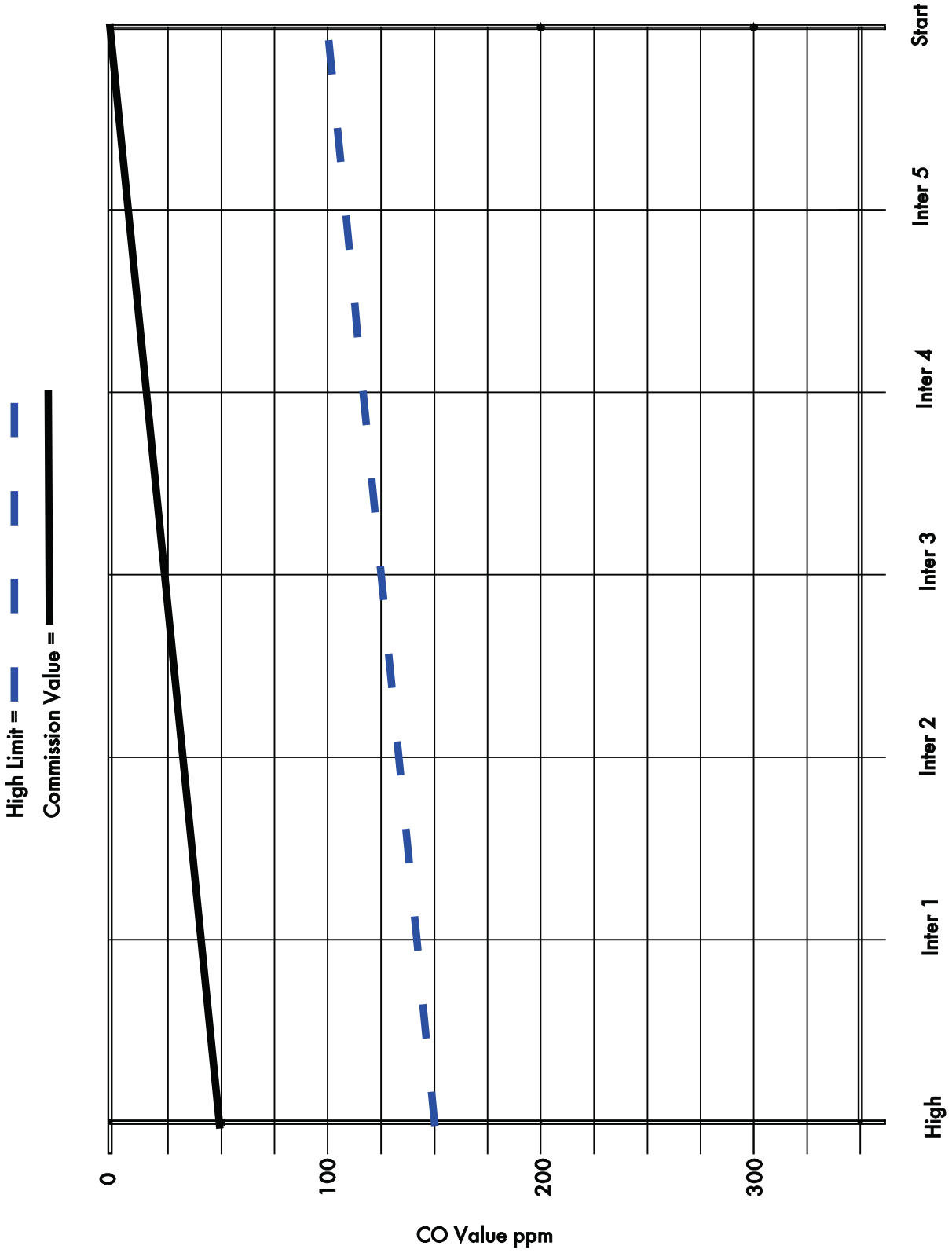

3.8 EGA DIMENSIONS

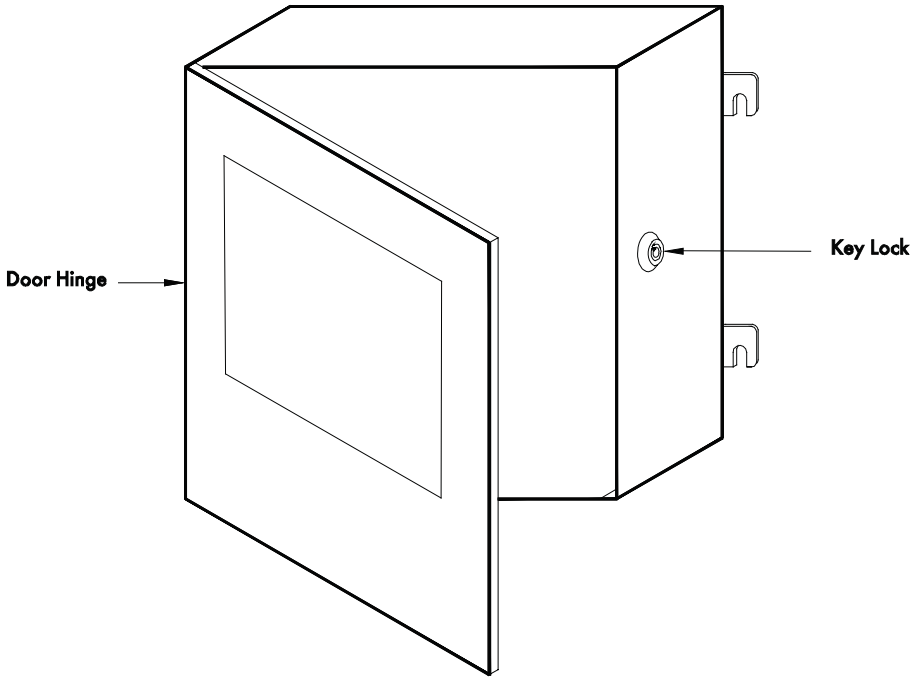

Note:
Depth Of Panel With Fixing Bracket = 180 mm (7.125")

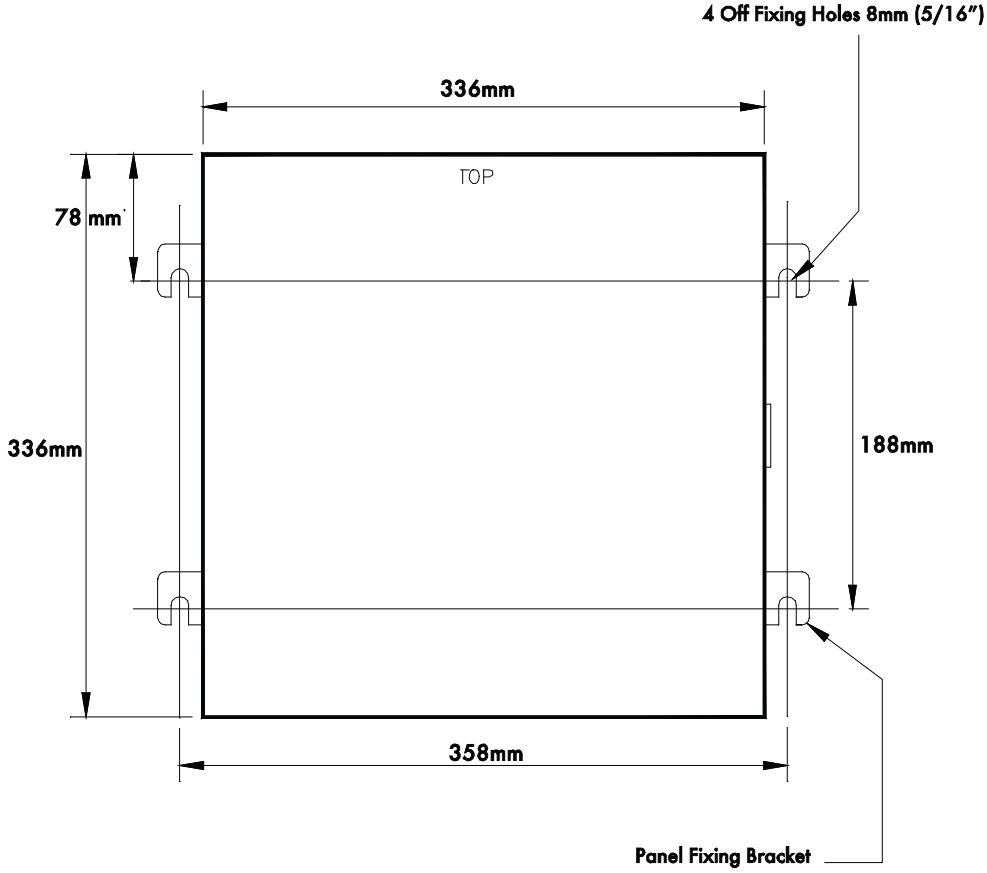

3.9 SAMPLING PROBE

3.9.1 Installation and Maintenance

EGA Sampling Probe Installation

Mount the sampling probe at an angle of approximately **45 degrees**.

Install a 1.5″ BSP socket on the flue or other point that the sampling probe is to be positioned.

Mount the main body of the probe as far in as possible; adjustment is made by loosening the grub screws in the flats of the 1.5″ BSP bush supplied on the probe.

Keep the thermocouple cable and sample tube away from hot surfaces.

Note: For correct EGA operation the probe must be positioned without air leaks as this will give incorrect readings on all sensors.

EGA Sampling System Unit Installation

Push the sample tube onto the inlet tube. Plug the thermocouple connector into the socket and tighten the screw.

To obtain optimum performance and reliability do not mount the unit in ambient temperatures above 40°C (104°F) or areas of direct heat radiation. Ensure that the air flow to the intake in the bottom of the ega unit is not impeded and the air temperature is less than 40°C (104°F).

Do not mount the units were excessive vibration occurs (floor standing racks are available from Autoflame Engineering Ltd).

Position the sample tube so that the sample slopes down to the EGA unit at all times. The EGA unit must always be mounted lower than the EGA probe. This helps drain excessive condensate from the flue gases and cause blockages in the sample tube.

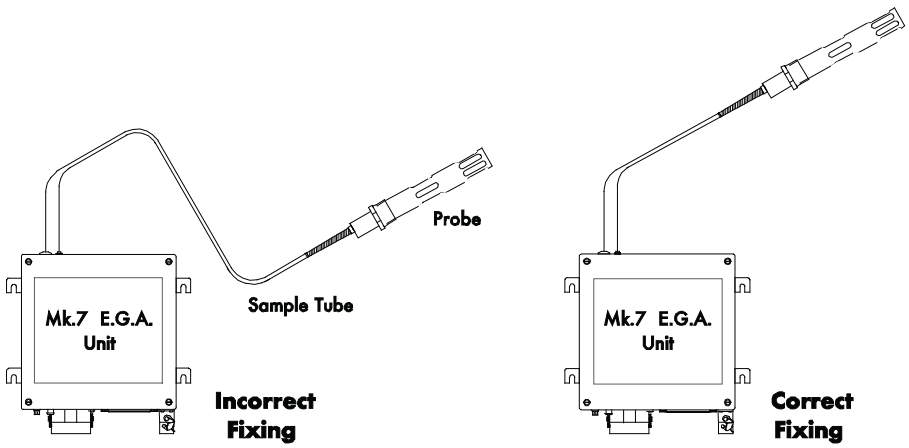

Figure 3.9.1 Incorrect and Correct Installation of a EGA Unit.

3.9.2 Sampling Probe Assembly

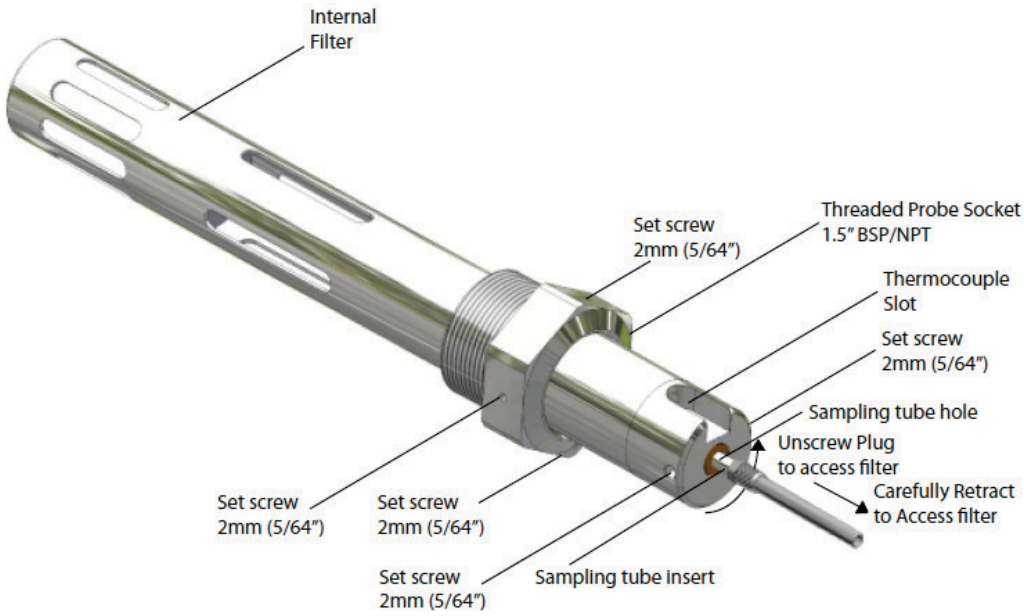

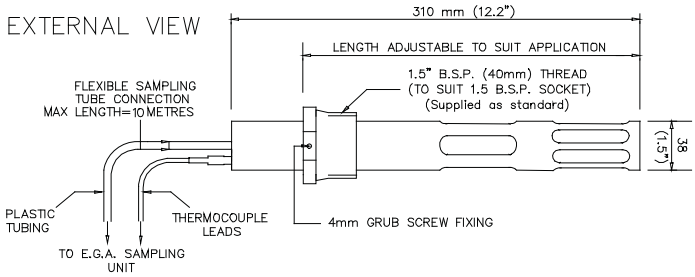

ASSEMBLY OF E.G.A. PROBE

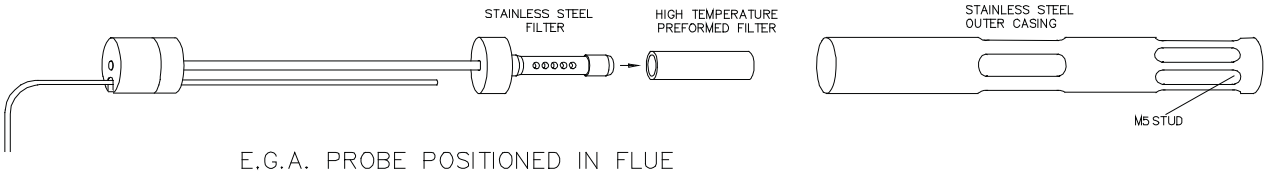

E.G.A. PROBE POSITIONED IN FLUE

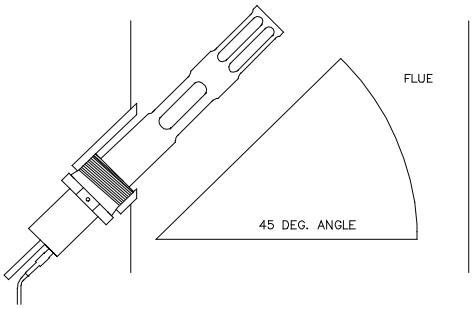

3.9.3 Sampling Probe Internal Filter

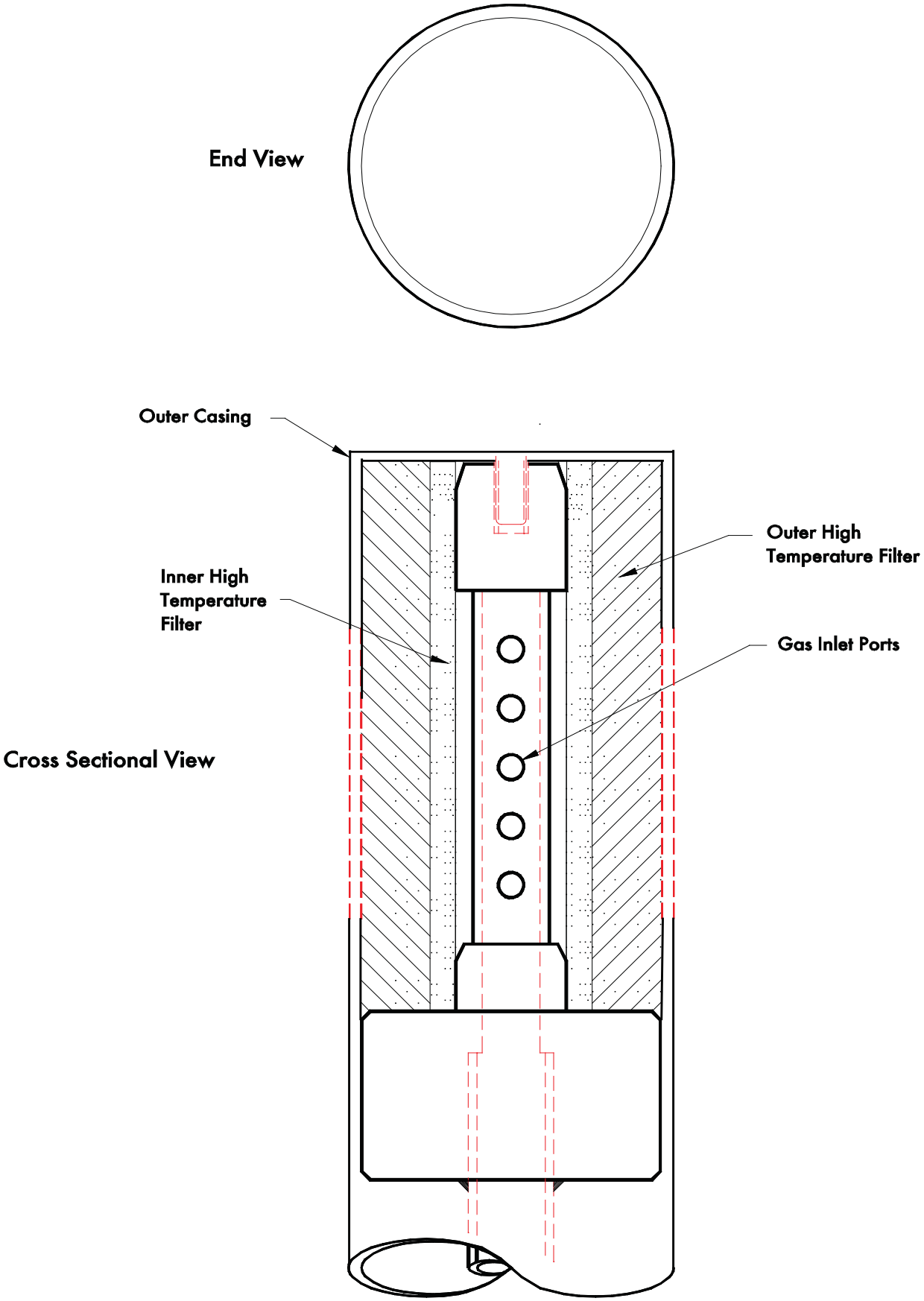

All Parts Manufactured From Stainless Steel

3.9.4 Maintainance of the Sampling Probe

On gas only applications it is unlikely that there should be continual maintenance required on the stack mounted probe. It is advised that the probe is checked annually on the gas firing applications in order to ensure that the probe is free of any blockages. On heavy or solid fuel applications, deposits may build up in the outlet part of the tube. If a blockage in the tube occurs a 'O2 pump fault' will appear on the EGA (See Section 3.4).

The deposits can be cleared by running a long drill (7mm/0.275") up into the outlet tube by hand. Twist and withdraw the drill often so as to pull out the deposits, otherwise the deposits will be pushed further into the probe assembly.

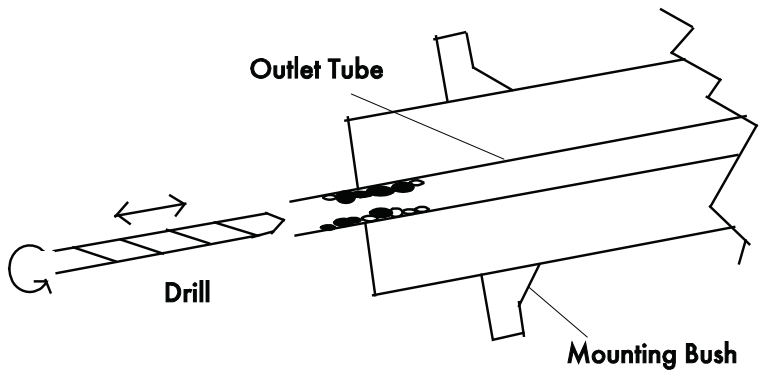

Figure 0 Diagram to Show Method of Cleaning a Blocked Outlet Tube

3.9.5 Servicing EGA Sampling Probe

If the filter assembly in the EGA sampling probe is blocked then it is necessary to disassemble the probe and fit a new pre-formed fine filter and coarse filter (Part Number SP70012). To check if the probe is blocked connect the probe to the EGA and allow the EGA to sample. If the pump pressure or flow rate drops below 110mBar or 550 ml/min respectively then the filtering material should be replaced.

To disassemble the probe, unscrew the casing from the base of the probe. See diagram in section 3.9.2. The whole of the internal assembly can now be withdrawn from the sample connection end. Remove all traces of the filtering materials from the stainless steel filter. Check that the ways in the stainless steel filter are clear and also the inner sample tube. Very carefully (the pre-formed fine filter slide is delicate) push the pre-formed filter onto the stainless steel filter. Slide the inner assembly back into the stainless steel outer casing. Pack the void between the fine filter and the outer casing with coarse filtering material, as shown on the filter assembly diagram. Use a small rod to pack the material down a little at a time. Reassemble by sliding the assembly into the casing, and screw together.

After reassembly connect the probe to the EGA and check that the pressure and flow from the pump is ok.

3.10 TECHNICAL SPECIFICATION

Electrical Supply	230/110V 50/60 Hz
Pump Flow	110 – 120 mBar 600ml/min
Environmental Rating	IP20 NEMA 1
Air Conditioned Unit	IP 54 NEMA13

Temperature Range

EGA	Min : 5°C (40°F) Max: 40°C (104°F)
Ceramic Sampling Probe EGA 20105	0 – 1600 °C (32 – 2912°F)
Type "K" Thermocouple SP 1044	0 – 400°C (32 – 752°F)

3.11 ANCILLARY EQUIPMENT

3.11.1 External Particulate Filter

The External Particulate filter (Part Number EGA 70105) is designed to be used when there is excessive moisture from the flue gasses or if there is excessive particulates from the flue gasses that may cause damage to the EGA. The External Particulate filter stops excessive moisture from getting into the EGA as it has its own drain solenoid which will drain any excess moisture at the same time intervals as the normal drain solenoid on the EGA. The External Particulate filter also has its own filter which is more capable at filtering excess particulates from the flue gasses than the internal EGA filter. As such this product is ideal for installations where there are excessive particulates from the fuel being burnt i.e. Oil. Due to the nature of this product it can only be installed by Autoflame and cannot be retrospectively fitted on site. The External Particulate Filter can be ordered with a new EGA or retrofitted onto an existing EGA at Autoflame London.

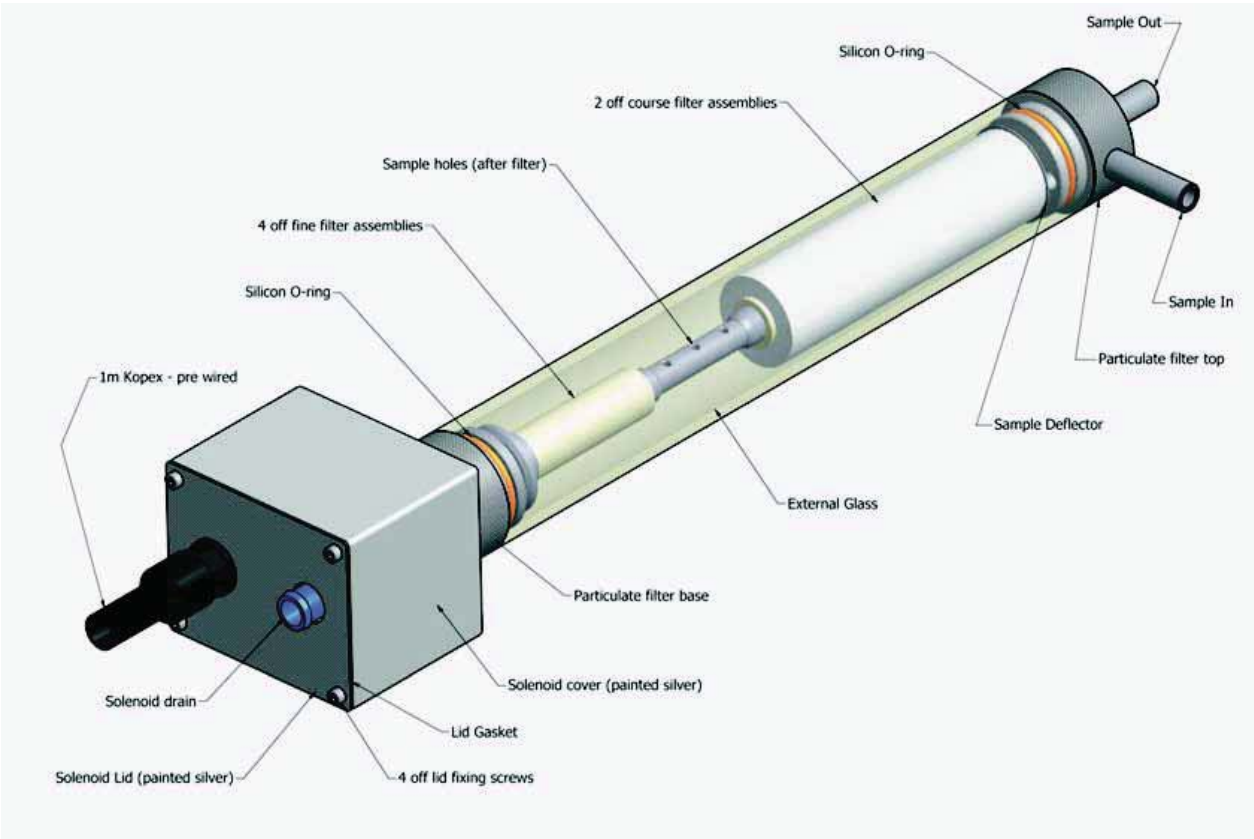

Figure 3.11.1 External Particulate Filter Drawing

3.11.2 Air Inlet Filter

The Mk7 EGA Air Inlet Filter (Part Number EGA 70106) is designed to protect the EGA from dust and other particles that may cause damage or reduce the performance of the EGA over time. The Air Inlet Filter will fit over the fan that cools the EGA and stop dust and particles from getting inside the EGA. The Air Inlet Filter is easy to maintain with only the Air Filter material needing replacing once it has become saturated. The time between each change of Air Filter will vary on the location of the installation. The Air Filter Material has a separate part number (EGA 70107) and can be ordered separately at any time.

3.11.3 Chilled Enviromental Enclosure

In areas of harsh ambient conditions, or excessive heat, it is necessary to utilise an environmental enclosure with the EGA module. This allows protection to the EGA from excessive heat and dust and ensures that the EGA is well protected. Utilising the enclosures allows the EGA to operate under optimal operating conditions.

Autoflame manufacture a chilled environmental enclosure that uses a chiller module and control panel in order to maintain the EGA installed within the enclosure at a set temperature. The temperature is user adjustable by means of a thermostat counted on the unit but is nominally set for 35°C (95°F), which ensures ideal operating conditions for the EGA.

Please see the diagram below showing information on the chilled environmental enclosure. If you require further information please contact Autoflame Sales Department. salesinfo@autoflame.com

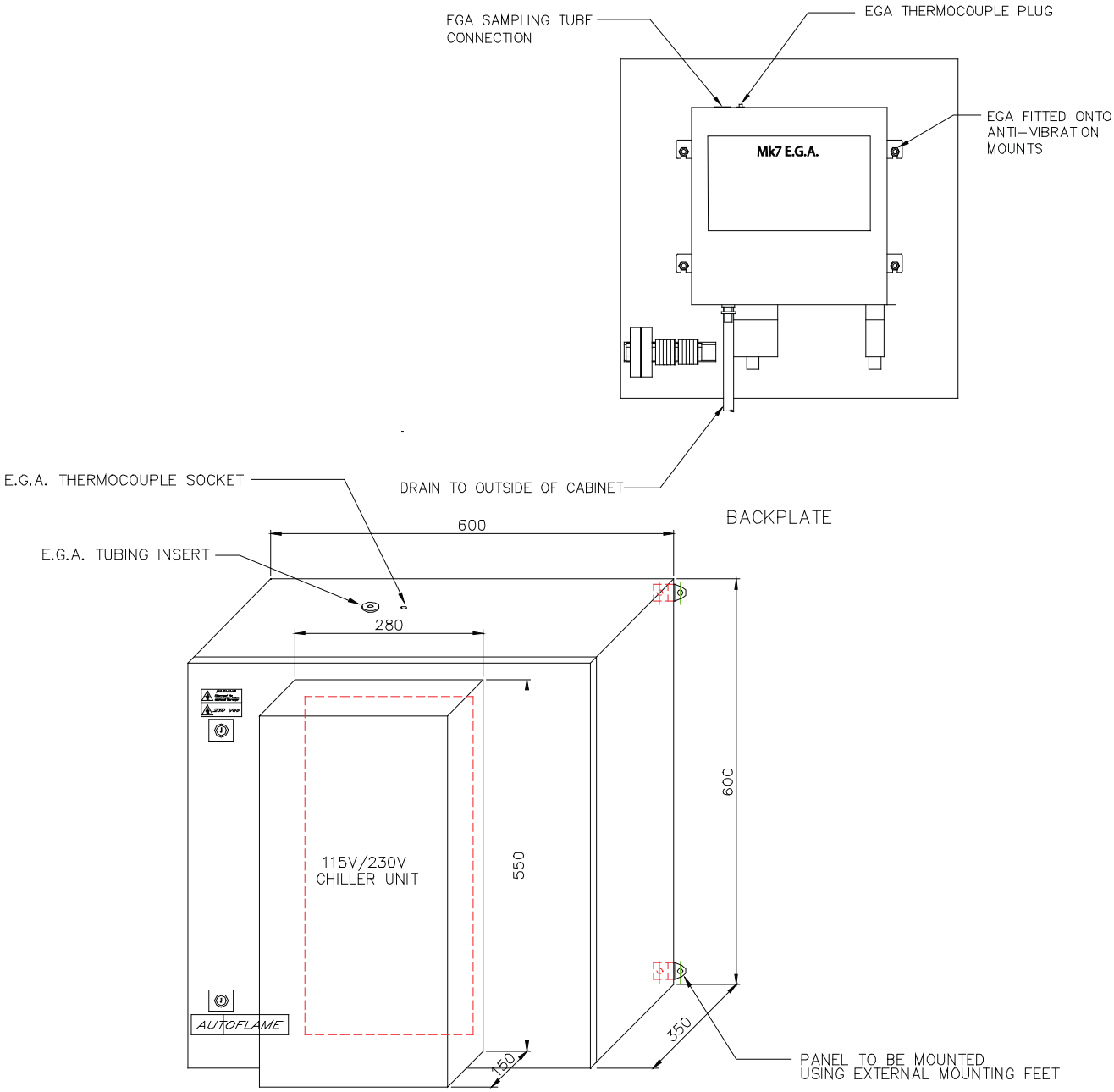

Figure 3.11.3 Schematic of Chilled Environmental Enclosure

3.12 SHIPPING THE EGA

The EGA is a scientific instrument with delicate components. Whenever the EGA is shipped it is essential that the EGA is packed carefully in an Autoflame EGA shipping carton as originally supplied.

Ensure that couriers treat the package appropriately. Label the package as containing a delicate scientific instrument.

If the EGA is damaged in transit, repair costs will be incurred.

Please contact Autoflame or your local Tech Centre to obtain a new Autoflame EGA carton.

SECTION 4: IBS – INTELLIGENT BOILER SEQUENCING

4.1 OVERVIEW – FEATURES & BENEFITS IF IBS CONTROL

4.1.1 Overview of System Operation: Features and Benefits

4.1.2 Hot Water Boilers Sequential Control

4.1.3 Steam Boilers Sequential Control

4.2 SEQUENCING OPTIONS AND PARAMETERS

4.3 GUIDE TO COMMISSIONING SEQUENCING

4.3.1 Implementing Hot Water Sequencing

4.3.2 Implementing Steam Sequencing

4.4 ELECTRICAL SCHEMATICS

4.4.1 Sequencing Connection Diagram

4.4.2 DTI Sequencing Connection Diagram

4.5 IBS EXAMPLES

4.5.1 Hot Water Sequencing Example

4.5.2 Single/Twin Burner Example

4.5.3 Example Of IBS Communications

4.1 OVERVIEW – FEATURES & BENEFITS OF IBS CONTROL

4.1.1 Overview of System Operation: Features and Benefits

The Intelligent Boiler Sequencing feature (IBS), which is included in every MM module, further extends the application possibilities of the system. The objective of this control form is to ensure that the minimum number of boiler/burner units is in operation at any one time to satisfy the heat requirement imposed upon the boiler plant, particularly in the case of multi boiler installations.

4.1.2 Hot Water Boilers Sequential Control

A maximum of ten MM and EGA modules may be interconnected by a two wire screened data cable (See interconnection drawing 4.4.1). Any MM interconnected may be selected as the lead boiler for the sequencing. This identifying of 'lead' boiler is achieved in two ways:

1. Connecting a mains voltage onto Terminal 88.
2. Instructing the modules via the DTI module (Data Transfer Interface) by software.

Once a lead boiler has been selected the system works in the following way:

Every scan time (set in Option 35) the sequencing software in the lead boiler identifies its own firing rate by looking at the fuel flow metering data the unit has. Having established percentage firing rate, and maximum heating capacity, the IBS software calculates the amount of heat being contributed to the system by the boiler. The IBS software in the lead MM module then contacts in turn each of the modules connected to this loop and gathers similar information from each. The lead MM's IBS software then calculates the minimum number of boiler/burner units that need to be operational to satisfy the building load, imposed upon the plant at that time and switches the remainder off. Terminal 78 on the MM is a switched neutral connection for controlling a two port valve that would normally be installed in the boilers return pipe connection to the common return header. This facility ensures that boilers that are switched 'offline' do not contribute return temperature water to the flow header thereby diluting the flow temperature to the building.

4.1.3 Steam Boilers Sequential Control

When the IBS software control package is applied to steam boilers, it's operation is exactly the same as above but with additional features and enhancements as explained in the following.

In the case of heating boilers only two states in the control form exist, either on or off. When steam boiler variations of IBS are optioned there are three states which are controlled sequentially.

The first is 'online', this is when the boiler is operating purely under the control of the MM modules internal PID load controller.

The third state is 'standby warming'. In this case the boiler is operated at a reduced pressure setpoint and runs for a number of minutes each hour. E.g. if the online boiler or boilers are set a setpoint of 7 Bar (100 PSI) the standby warming boiler controls at a setpoint of 5 Bar (72 PSI). In this way if the load increases the standby warming boiler can begin to contribute steam quickly. The reduced setpoint is a user variable option in the same way as the normal control pressure setpoint. The number of minutes run time is also adjustable.

The third state is 'Offline', this is with the burner shut down and the boiler cold. If the load on the boiler house increases, this boiler would move into a 'warming' condition.

Apart from the variations detailed above, the steam sequencing works in precisely the same way as the heating boiler sequencing: The sequencing software package ensures that at all times the minimum number of boilers are operational to satisfy the load imposed on the boiler house.

Note:

It should be appreciated that all data and control variables can be shown on a computer via the addition of a DTI module to the data loop. The computer can be sited locally in the boiler house or the whole system can be addressed remotely. In the software of the DTI there is a histogram facility which shows the firing rate and state of each boiler in the boiler house.

4.2 SEQUENCING OPTIONS AND PARAMETERS

Note: The Options and Parameters must only be changed by factory trained and certified technicians who have a thorough appreciation of the Autoflame combustion systems and the combustion process in general. Any person changing the Options and Parameters who does not have the correct factory training and understanding of these settings/adjustments may place themselves and others in a potentially dangerous situation.

Option No.	Factory Setting	Option Value	Description
16	**0**		**Lead/Lag (IBS) and DTI:** A lead boiler can be selected by connecting a line voltage to terminal 88 on the appropriate MM. Only 1 MM may be selected as lead boiler at a time, or the sequencing will not operate. The lead boiler can be selected via the DTI. However, for this to be effective all the MM units on the system must have terminal 88 volt free. Line voltage on Terminal 88 overrides the DTI command.
		0	No sequencing - MM units still communicate and can be seen on the DTI.
		1	Sequencing enabled - MM units will respond to sequencing commands. Lead boiler is selected by a line voltage on terminal 88.
		2	Setpoint & enable/disable commands accepted from DTI.
		3	Both 1 and 2.
			Note: *Accurate fuel flow metering must be entered for sequencing to operate. An RS485 data cable (Belden 9501) must be connected between each MM unit (see Section 2.17.2.11.5 for correct connection).*
33	**1**		**MM Identification:** The identification number must be set on all MM Units in the boiler house. If not, then problems will occur with sequencing/twin burner and with the DTI communications. Each unit must have a different identification number.
		1 -10	Identification number
34	**5**		**Rating of Burner:**
		1 - 999	See option 77 for units.
35	**10**		**Sequence Scan Time:** This is the time period between sequencing requests from the lead MM. On the sequence scan time, the lead MM will demand lag burners to be brought online or offline, depending on load requirements. See parameters 86 and 87 for thresholds.
		1 - 100	Sequence scan time (minutes).
			Note: *Accurate fuel flow metering must be entered for sequencing to operate. An RS485 data cable (Belden 9501) must be connected between each MM unit (see section 2.17.2.11.5 or correct connection).*
40	**0**		**Warming Facility for Low Pressure Steam Sequencing:** For lead/lag (sequencing) applications where check (non-return) valves are not installed, it is not possible to use a phantom setpoint to keep the boilers in a standby warming condition. Therefore, the facility exists to install a thermostat (aquastat) in the boiler shell. The thermostat will input 230V/120V on terminal 93 and this initiates warming (see option 41). The boiler will remain in a warming state based on the settings for options 53 and 54.
		0	Disabled
		1	Enabled
41	**0**		**2/3 State Sequencing:** This option sets 2 states of operation for the lag boilers. Either one boiler is kept in a standby warming state and the other boilers are off, or all lag boilers are kept in a standby warming state and there are no off boilers.
		0	3 State Sequencing: LEAD, STANDBY, OFF, OFF, OFF, OFF...
		1	2 State Sequencing: LEAD, STANDBY, STANDBY, STANDBY...

Option No.	Factory Setting	Option Value	Description
42	**20**		**Warming facility for medium/high pressure steam sequencing - phantom setpoint:** For lead/lag (sequencing) applications where check (non-return) valves are installed, it is possible to use a phantom setpoint to keep the boilers in a standby warming condition. This value is an offset below the normal required setpoint. When the phantom setpoint is in effect, the burner is held at a low flame position.
		0 - 100	If Centigrade, Fahrenheit or PSI units effective.
		0 - 10.0	If Bar units effective.
53	**0**		**Steam Boiler Sequencing Burner 'off' time:** The steam boiler type sequencing is enabled by setting option 1 to a respective pressure sensor. Options 42, 43 and 44 are relevant to the "standby" boiler operation.
		0	Off
		1 - 200	Burner "Off" time (minutes) during warm up cycle. Intelligent Boiler Sequencing - Steam boiler applications.
54	**5**		**Steam Boiler Sequencing Burner 'on' time:**
		1 - 30	Burner "On" time (minutes) during warm up cycle. Intelligent Boiler Sequencing - Steam boiler applications.
57	**0**		**Fuel Flow Metering:** Fuel flow metering is required for several functions to work correctly. Autoflame recommend entering dummy points if a fuel meter is not available to measure actual flow. Setting this to 1 will initiate fuel flow metering once the burner is firing. See section 2.17.7.21.
		0	No flow metering.
		1	Flow metering operates and recalibrated.
		2	Totalised flow metering reset to zero for selected fuel.
77	**0**		**Burner rating units:** Display purposes only for fuel flow metering.
		0	KW x 100 /hr
		1	Kg x 100 /hr
		2	MW /hr
		3	Btu x 100 /hr
		4	Hp x 100 /hr
		5	lbs x 100 /hr
		6	Btu x 1000 /hr
		7	Hp x 10 /hr
		8	lbs x 1000 /hr
		9	Btu x 1000 000 /hr

Parameter No.	Factory Setting	Parameter Value	Description
1	**3**	0 - 20	**Sequencing:** Offset value when unit goes offline. If the standby boiler fails to start the scan time will be decreased by the value set (minutes). i.e. Scan time is 10 minutes and value is 3 then the next scan time will be reduced to 7 minutes when the standby boiler fails to start.
2	**1**	1 - 10	**Sequencing:** Time between data requests (seconds). Bus driver requests information every 'n' seconds, MM's transmits every 'n' seconds, the DTI only listens to transmissions.
3	**1**	1 - 10	**Sequencing:** Number of boilers initally set on after powerdown.
5	**4**	1 - 50	**Sequencing:** Modulation time out (minutes). i.e. If the boiler is not modulating after being asked to contribute to the load after this time it is kicked out of the sequence loop. E.g. Burner must start to modulate in 4 minutes from being asked to contribute to the load.
57	**0**	0 - 10	**Sequencing:** Highest MM ID. This parameter speeds up communications between MM's when sequencing.
62	**0**	0 - 1	**Hot water sequencing:** If this Parameter is set to 1 then the hot water sequencing will operate in the same way as the steam sequencing (contact Autoflame before use).
83	**0**		**Display diagnostic values:**
		0	Disabled.
		1	Enabled.
84	**0**		**Display diagnostic values for IBS.**
		0	Disabled.
		1	Enabled
86	**0**	0 - 99	**IBS change down threshold:** If left at 0 change down threshold is 85% firing rate.
87	**0**	0 - 100	**IBS change up threshold:** If left at 0 change up threshold is 95% firing rate.
			Note: *If Parameter 86 is set greater than Parameter 87 then they will default to 85% to 95% respectively.*
101	**0**		**Shuffle sequencing:**
		0	Disabled
		1	Sequence order changed from DTI.

4.3 GUIDE TO COMMISSIONING SEQUENCING

Before any attempt is made to implement sequencing operation it is necessary that the fuel/air positions and fuel flow metering are already entered. Refer to the Mk7 and Mini Mk7 manuals for commissioning fuel/air positions and implementing fuel flow metering.

The following Options/Parameters are used for both hot water sequencing and steam sequencing.

Option 16 - 1 or 3 to enable sequencing.

Option 33 – Sets the ID number of the MM. No two MM's can have the same ID number in the same sequencing loop otherwise the two MM's will drop in and out of the sequencing loop.

Option 34 –Sets the rating of the burner and is used to calculate how much heat/pressure the boiler is contributing to the system. The units are set in Option 77.

Option 35 – Sets the scan time in minutes. This scan time has a critical effect on the responsiveness of the sequencing system as it is this time that dictates when the lead MM checks the system to turn burners on or off. Too long of a scan time and sudden demand can cause the header pressure to drop. Too short of a scan time and another boiler may be brought online before another boiler has started firing.

Parameter 57 – Set the value to the highest numbered MM in the sequence loop. This speeds up the communications between the MM's if less than 10 MM's are in the sequencing loop.

Parameter 86 – Sets the change down threshold. This change down threshold is the total firing rate of the last two boilers firing rate. For example three boilers are sequenced ID 1 is at 100% and ID's 2 and 3 are at 40%. Since the last two boilers in the sequencing loop have a combined firing rate of 80% which is below the 85% threshold then ID 3 will be shutdown and the load maintained by burners 1 and 2.

Parameter 87 – Sets the change up threshold. This is based solely on the firing rate of the last boiler to be brought online. Once the firing rate of this burner reaches the threshold the next burner in the sequencing loop will be brought online. For example once the firing rate reaches 95% in the lead boiler the first lag boiler will be brought online to contribute to the load.

4.3.1 Implementing Hot Water Sequencing

The following Options/Parameters are used for hot water sequencing and some need to be set to certain values to implement hot water sequencing.

Option 53 – MUST BE SET TO 0 for hot water sequencing. This disables standby warming which is only used in steam sequencing.

Option 41 – MUST BE SET TO 0 for hot water sequencing. This sets the 2/3 state sequencing to 3 state sequencing.

With hot water sequencing it is possible to use a Terminal 78 which is a switched neutral to control the two port valve. This works by switching to neutral once the burner has stopped firing but if the temperature of the boiler ever gets above the required set point then Terminal 78 will switch back even if the boiler is not firing.

4.3.2 Implementing Steam Sequencing

The following Options/Parameters are needed to setup steam sequencing.

Option 41 – Sets 2/3 state sequencing. The first state is online where the boiler is firing. The second state is standby where the boiler will run through its standby warming sequence as set in Options 53 and 54. The third state is offline where the boiler is cold.

Options 53 – Sets the standby warming off time. This is the time in minutes for how long the boiler will be off for during standby warming.

Option 54 – Sets the standby warming on time. This is the time in minutes for how long the boiler will be in low flame hold for to heat the boiler up to its phantom setpoint. Options 42, 43 and 44 set the phantom setpoint.

4.4 ELECTRICAL SCHEMATICS

4.4.1 Sequencing Connection Diagram

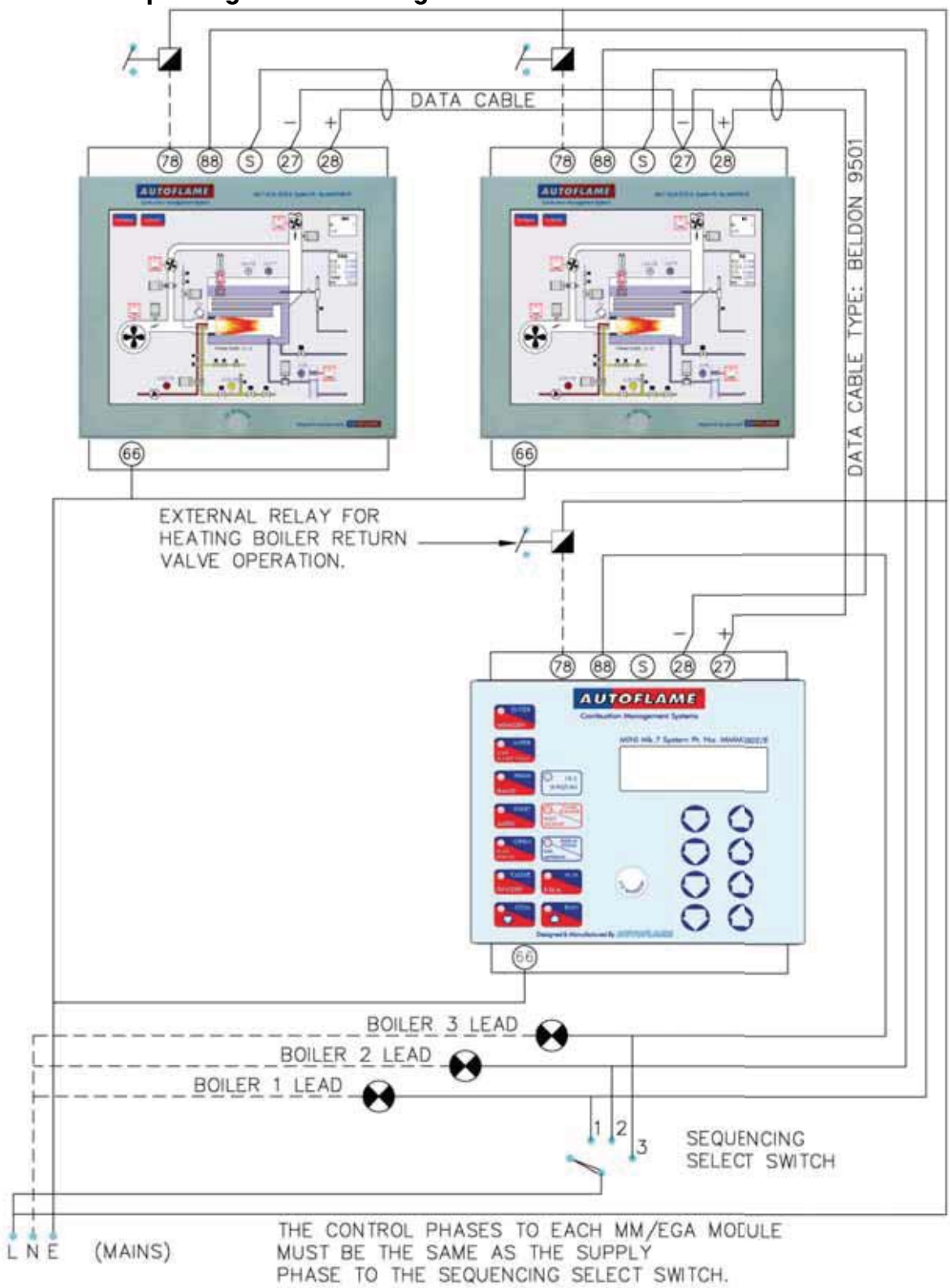

4.4.2 DTI Sequencing Connection Diagram

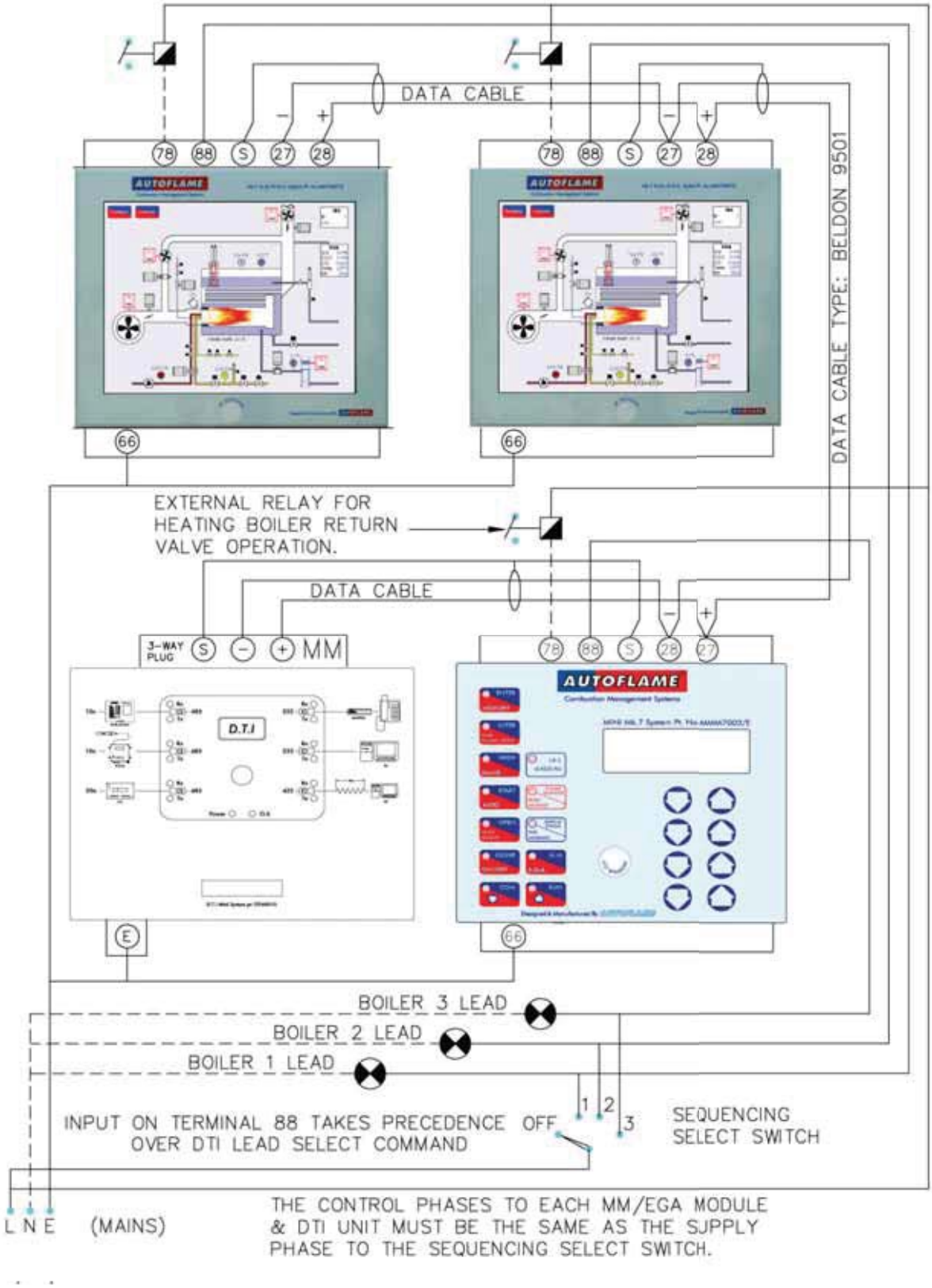

4.5 IBS EXAMPLES

4.5.1 Hot Water Sequencing Example

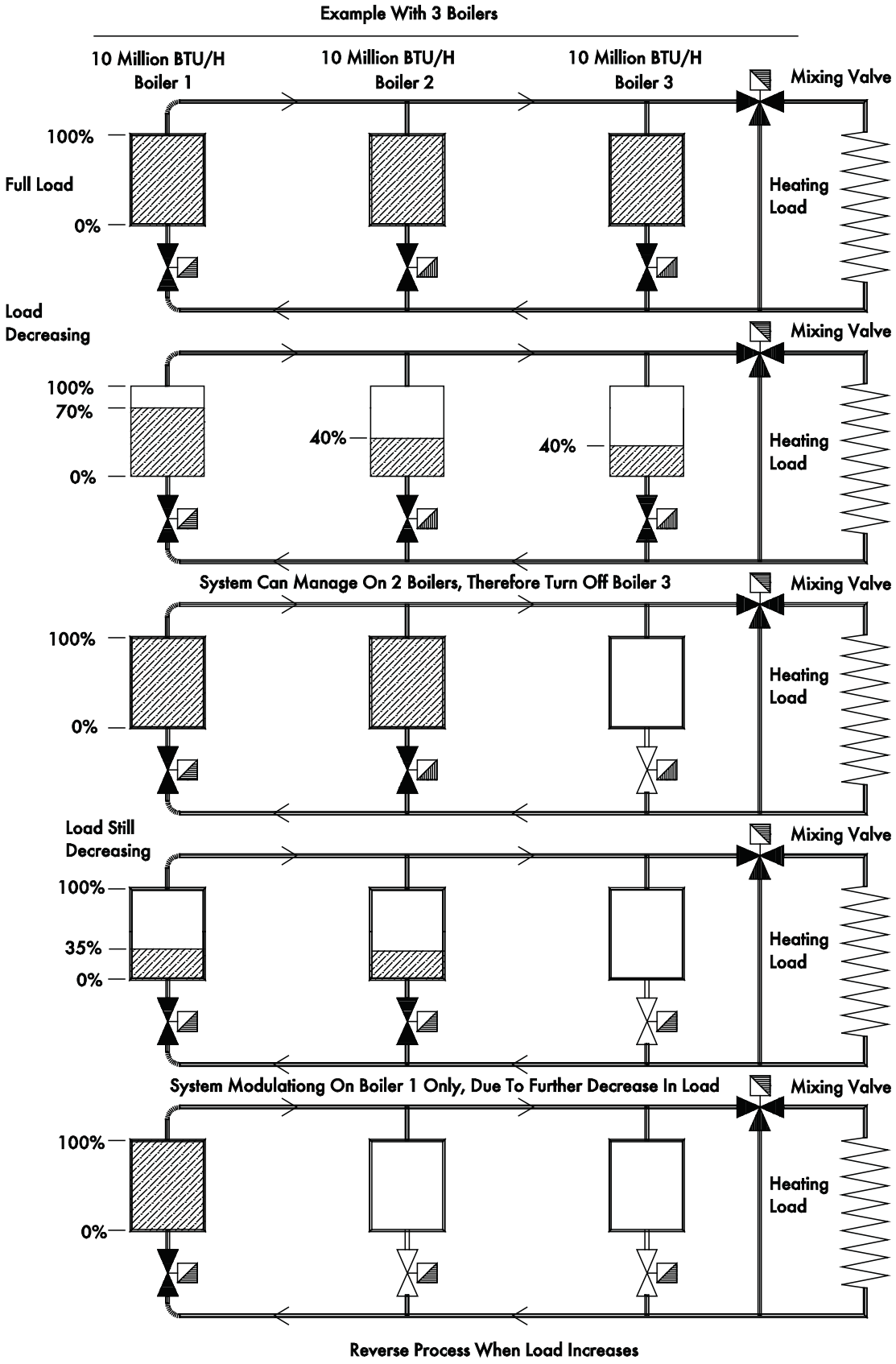

4.5.2 Single/Twin Burner Example

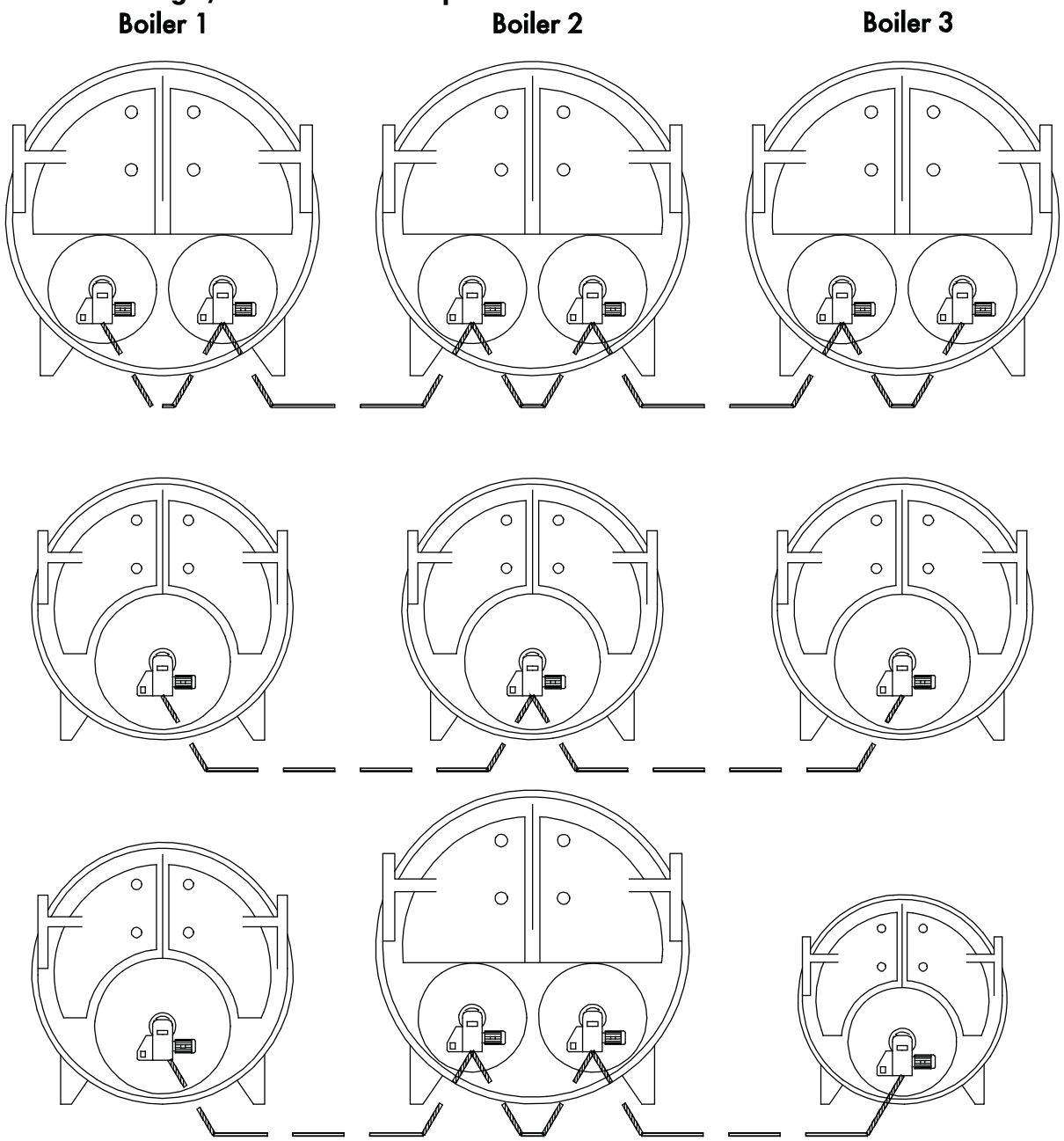

Note: To operate Autoflame sequencing a DTI unit is not required

4.5.3 Example Of IBS Communications

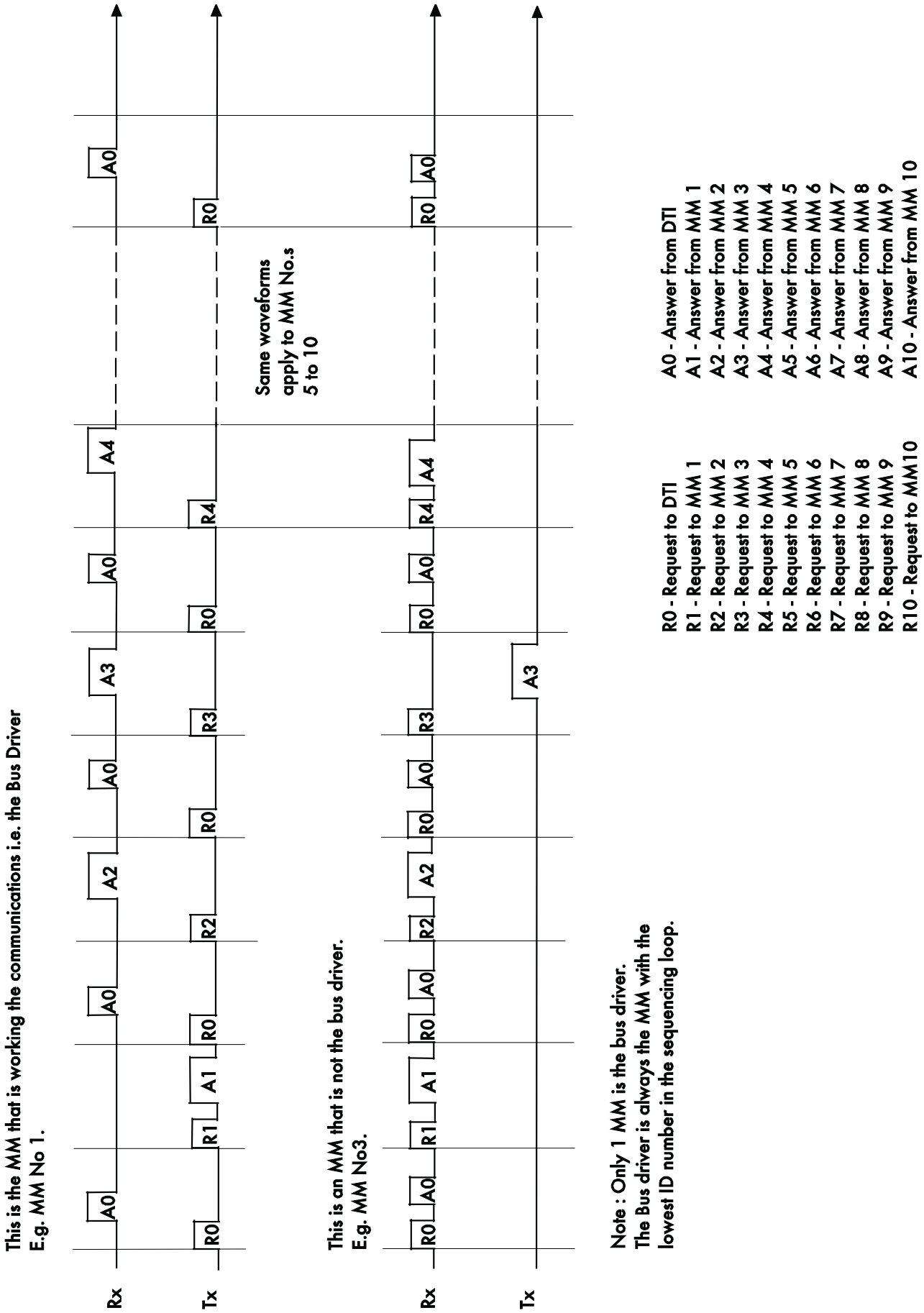

SECTION 5: WATER LEVEL CONTROL

5.1 INTRODUCTION

5.1.1 Water Level System Schematic

5.1.2 Method of Operation & Control Philosophy

5.1.3 Movement Detection of Water

5.1.4 Swell Management

5.2 2ND LOW SWITCHING PHILOSOPHY

5.3 SHUNT SWITCH AND BOTTOM BLOWDOWN MANAGEMENT

5.3.1 Shunt Switch Philosophy

5.4 HISTORICAL RECORD OF EVENTS ON AUTOFLAME WLC

5.5 FIRST OUT ANNUNCIATION

5.5.1 Procedure for wiring First Out Annunciator

5.6 INTEGRATING OTHER WATER LEVEL CONTROLS WITH AUTOFLAME

5.7 STEAM FLOW METERING

5.7.1 Steam Flow Metering Incorporating a Deaerator

5.7.1.1 Steam Flow Measurement for Multi Boilers with Steam Deaerators

5.7.2 Steam Flow Metering Incorporating a Deaerator, Calculations

5.7.3 Schematic For Steam Flow Application With A Deaerator

5.7.4 Schematic For Steam Flow Application Without A Deaerator

5.8 HEAT FLOW & HOT WATER FLOW METERING

5.8.1 Calculation for Heat Output & Volume Flow

5.8.2 Heat Flow & Hot Water Flow Metering

5.8.3 Schematic For Heat Flow Metering Application

5.9 WAVE SIGNATURE EXPLANATION

5.9.1 Breaking Bubble/Spray

5.9.1.1 Thermal Currents (heat energy in water)

5.9.1.2 Steam Flow Induced Surge

5.9.1.3 Foaming

5.9.2 Schematic Explanation of the Water Level Probe Operation

5.9.3 Schematic Of The Probe Sampling Hardware

5.9.4 Capacitance Probe - General Installation Information

5.9.5 Capacitance Probe - Externally Mounted Pots

5.9.6 Capacitance Probe - Internally Mounted Probes
5.9.7 Capacitance Probe - Installation Information For A Water Tube Boiler
5.9.8 External Probe Chamber Dimensions
5.9.9 Capacitance Probe Specification
5.9.10 Autoflame Modulating Feedwater Valve
5.9.10.1 Feed Water Valve Exploded Diagram
5.9.10.2 Feedwater Valve Specification
5.9.10.3 PTFE Liner
5.9.10.4 Replacing the PTFE liner
5.9.10.6 Feedwater Valve Sizing Calculations
5.9.10.7 Feedwater Valve GA Drawings

5.10 WATER LEVEL SETUPS

5.10.1 Selecting Water Level Setups Mode
5.10.1.1 Water Level Parameters
5.10.1.2 Resetting Water Level Setups and Parameters
5.10.2 Replacing the Servomotor / Actuator for a feedwater valve

5.11 WATER LEVEL WIRING

5.11.1 Water Level PCB Wiring Schematic
5.11.1.1 Terminals Description
5.11.2 Water Level Electrical Specification
5.11.2.1 Fuse Position and Rating
5.11.3 Capacitance Probe Connections
5.11.3.1 Photos of New Design

5.12 COMMISSIONING THE WATER LEVEL POSITIONS

5.12.1.1 Commissioning Screens
5.12.2 Operational Checks

5.13 BOTTOM BLOWDOWN CONFIGURATION

5.13.1 To Select Bottom Blowdown Configuration Mode

5.14 SHUNT SWITCH PHILOSOPHY

5.15 NORMAL OPERATION

5.15.1 End User Day to Day Operation
5.15.2 Water Level Operation
5.15.3 Water Level Display
5.15.4 Key to Alarms

5.16 DIAGNOSTICS SCREENS

5.17 TDS (TOTAL DISSOLVED SOLIDS) MANAGEMENT

5.17.1 The Philosophy of the TDS control system
5.17.2 TDS Probe Calibration
5.17.3 Control & Management of Total Dissolved Solids in a steam boiler.
5.17.3.1 Top Blowdown (Old Method - Using the Solenoid Valve)
5.17.3.2 TDS Continuous Blowdown (Motorized TDS Control using Autoflame Servo)
5.17.3.3 Installation of the T.D.S. probe assembly
5.17.4 Schematic Detail of the Measurement and Sample Routine
5.17.5 Relationship between Conductivity, Temp and TDS values
5.17.6 TDS Probe and Autoflame Sampling Vessel
5.17.7 Top Blow Down Management
5.17.8 Top Blowdown Adjusters
5.17.9 TDS Timing Diagram

5.1 INTRODUCTION

5.1.1 Water Level System Schematic

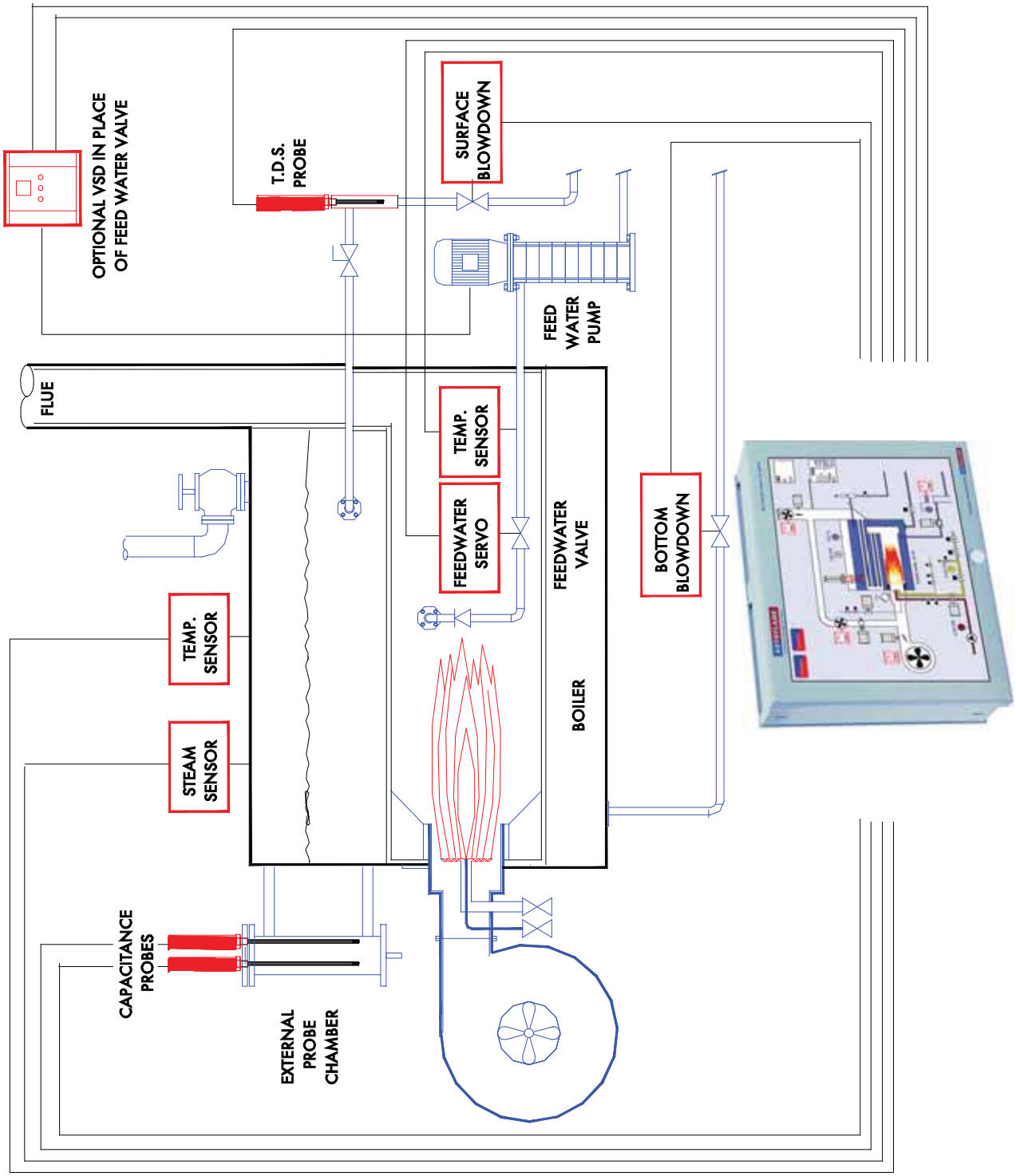

5.1.2 Method of Operation & Control Philosophy

The Autoflame level control is probably the safest and most accurate method of controlling water level in a steam boiler.

The system has a typical level control accuracy of + or – 2mm in still water. This accuracy is maintained during normal operation by Autoflame's patented "wave signature and turbulence management" software.

The system safety is guaranteed as the level measurement is managed by two identical capacitance probes both of which measure and control to the level switching points entered at the time of commissioning.

Both probes control typically "high level", "required level", "first low" and "second low". The level reading from both probes are constantly compared and checked against each other and the commissioned data. When controlling required level this data stream is combined with a PI algorithm which controls either the two port feedwater control valve or the variable speed drive to the feed pump. Each probe is self checked for electrical and mechanical integrity by hardware references and self checking software routines. Each probe and its control electronics are compensated for ambient temperature variations and component drift. It can be seen that this methodology guarantees absolute safety of operation.

By our method the probes control the required level by sampling and learning wave signature and of the turbulence within the boiler shell. This "wave signature management" takes into account the changes in burner firing rate and any variance in pressure in the boiler shell. Incorporated within the system hardware are all necessary electronic switching functions to control audible alarms, mute/reset and indication lights required to meet standard North American and European codes.
Safety, accuracy and integrity are guaranteed.

5.1.3 Movement Detection of Water

When the burner is running it is expected that a wave turbulence signature of in excess of 20Hz / 1mm will always be present (due to vibration of thermal energy). Both probes are checked for this value.
The default setting is 20Hz, a range of 0-100Hz is possible, if set to '0' this feature is turned off. This feature ensures that either probe cannot read a still water condition when the burner is running. This safety check ensures no static or stuck value can be accepted (i.e. probes are being checked that they are in water).

5.1.4 Swell Management

When there is a sudden drop in boiler pressure an increase in water level will be observed. This is due to the steam bubbles in the water expanding and so increasing the water level. It follows that the water feed would then turn off or to a low flow condition. The Autoflame system identifies this ambiguous condition and increases the "required water level" by up to 50% of the distance between normal "required level" and "high water level". When normal conditions are reinstated, "required level" returns to the normal setting. This stops spurious shut downs due to 1st low being switched during these transient conditions. The Autoflame system knows what the firing rate and boiler pressure is at any one time and uses this information to identify the above condition. This system is the only water level control in the world that can do this. This feature is one of the main elements in the patent claim.

5.2 2ND LOW SWITCHING PHILOSOPHY

"High" "normal level" and "1st low" operate with special software filtering to measure wave turbulence signature.

"2nd low" switches when either probe reads low for 10 seconds. This is an ultimate safety condition and so no filtering software is utilized.

5.3 SHUNT SWITCH AND BOTTOM BLOWDOWN MANAGEMENT

Blowdown Management can either be used for automatic bottom blowdown for the boiler or for automatic blowdown for the external probe chamber.

Up to 4 blowdowns can be accommodated in a 24 hour period. The duration of each blowdown can be programmed into the system, time 0-60 seconds. Each blowdown can be repeated by nominating the number in the last box on the display. In this way a pulsed effect can be implemented for maximum sludge evacuation effect.

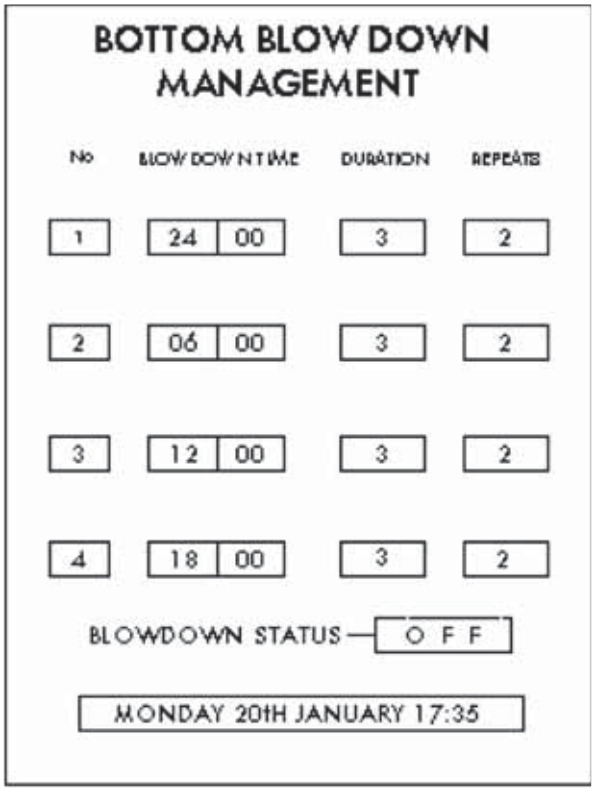

Each blowdown time is checked by on board software to ensure that not more than one boiler can blowdown at any one time (when units are data linked). An example of this would be where there are 4 boiler/burner units on a common header with one blowdown receiver.

5.3.1 Shunt Switch Philosophy

The ability to implement a controlled by-pass of the low water cut off's during a manual water column blowdown, boiler blowdown or evaporation test is available on the Mk7 with water level control. This is incorporated into the Autoflame controller so as to avoid the requirement for any additional push buttons/key switches on the control panel.
See section 5.14 for further details.

5.4 HISTORICAL RECORD OF EVENTS ON AUTOFLAME WLC

Within the system there is a dedicated screen for the recording of events relating to water level control & management of the boiler.
Each event is tagged for time, date and the type of incident, i.e. high water, 1st low, 2nd low and lockout.

	WL Alarms	Phase	Occurred	Reset
1	Probe Mismatch	Position to purge	19 Jul 2011 12:44	19 Jul 2011 12:44
2	Probe Mismatch	Purge	19 Jul 2011 12:43	19 Jul 2011 12:43
3	Probe Mismatch	Post purge	19 Jul 2011 12:02	19 Jul 2011 12:02
4	1st Low	Firing	19 Jul 2011 12:02	19 Jul 2011 12:02
5	Probe Mismatch	Standby	19 Jul 2011 11:51	19 Jul 2011 11:55
6	2nd Low	Firing	19 Jul 2011 11:50	19 Jul 2011 11:51
7	2nd Low	Idle	18 Jul 2011 12:26	18 Jul 2011 12:26
8	2nd Low	Post purge	18 Jul 2011 10:34	18 Jul 2011 12:26
9	1st Low	Firing	18 Jul 2011 10:34	18 Jul 2011 10:34
10	Control Cfg Mismatch	Recycle	17 Jul 2011 16:15	17 Jul 2011 16:15
11	Control Cfg Mismatch	Recycle	17 Jul 2011 16:14	17 Jul 2011 16:15
12	1st Low	Firing	17 Jul 2011 13:29	17 Jul 2011 13:30
13	Pre 1st Low	Firing	17 Jul 2011 13:29	17 Jul 2011 13:29
14	Pre 1st Low	Waiting Prove Cct Set	16 Jul 2011 16:12	16 Jul 2011 16:12
15	2nd Low	Standby	16 Jul 2011 16:06	16 Jul 2011 16:06
16	Control Cfg Mismatch	Recycle	16 Jul 2011 16:03	16 Jul 2011 16:05

The last 16 events will be kept in memory. This information can be accessed, monitored and logged via the D.T.I data transfer package.

5.5 FIRST OUT ANNUNCIATION

When the control circuit has a long series chain of various thermostat and switching elements, it is sometimes difficult to identify which element has opened the control circuit.
It is possible to monitor a maximum of 15 different inputs in a series control circuit. Each input responds to a signal voltage of between 100V to 250Vac. The first element in the loop that changes state will alter from "normal" to "fail" as detailed above. This first out fail status will remain until reset.

To set First Outs in a Mk7 it is required to use the IR Upload/Download software to label the First Outs and specify what action is taken if a First Out fails.

To setup a First Out a download of the MM must be taken. From this download you can setup the First Outs for the MM. On the IR Upload/Download software click the 'First Outs' tab to bring up the First Out screen below,

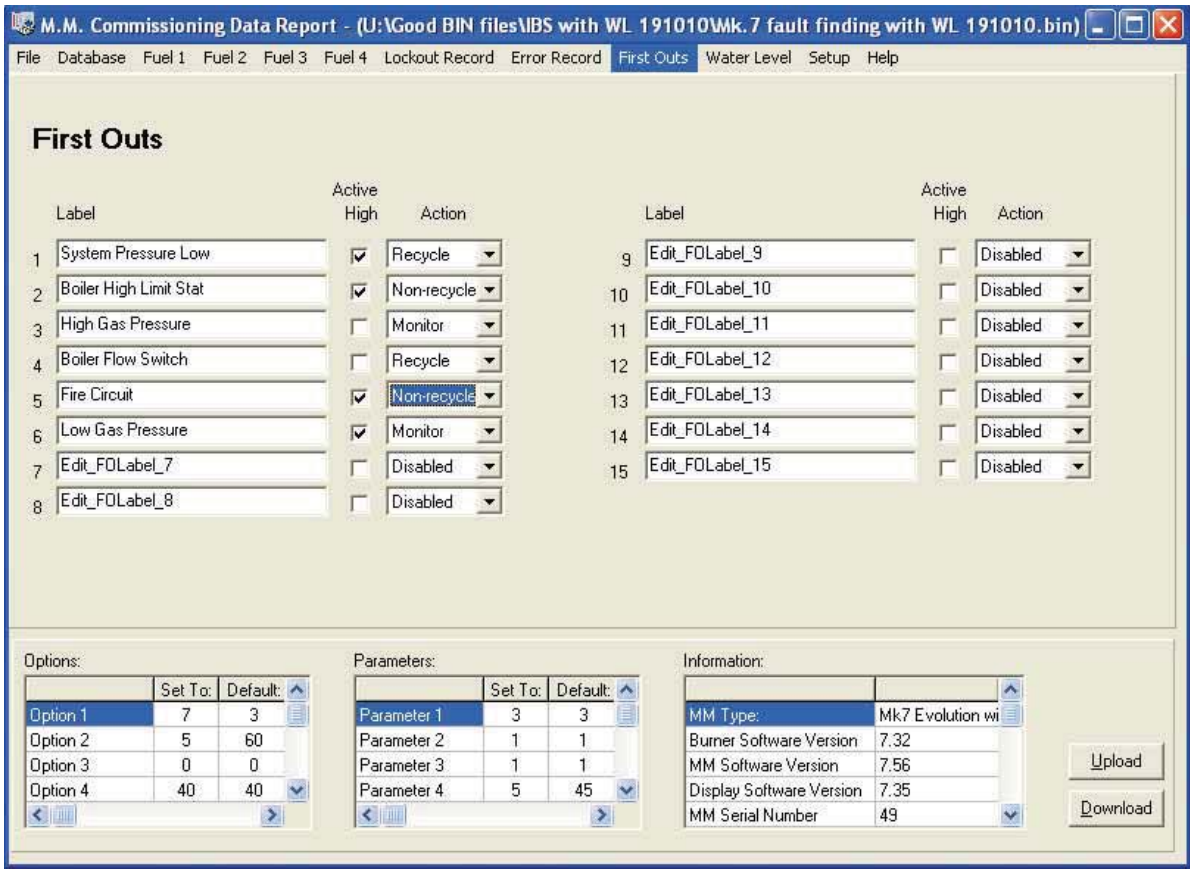

From this screen it is possible to programme the First Outs to each systems needs and label each First Out individually.

To label a First Out just type in the description of what the First Out is into the 'Label' box. This label will appear on the First Out screen of the MM so that it is easy to see what First Out has failed.
The Active High box is to define if a high voltage or a low voltage causes the First Out to fail. I.e. if the box is ticked, the MM will recognise the First Out as failing if there is a line voltage input into the relevant First Out terminal. If the box is un-ticked the MM will recognise the First Out as failing if there is no line voltage input to the relevant First Out terminal.

The Action box is to define what action the MM takes if the First Out fails.

Disabled – The First Out is disabled and the MM will not display the First Out or take any action if it fails.

Monitor – The First Out is only monitor, so the MM will display if the First Out if it fails but will not turn the burner off.

Recycle – If the First Out fails the MM will turn the burner off and the MM will turn the burner back on if the First Out is no longer failing with no manual reset required on the MM.

Non–Recycle – If the First Out fails the MM will turn the burner off and the MM will not turn the burner back on until a manual reset has occurred on the MM even if the First Out is no longer failing.

When using First Out Annunciation with a Mk7 MM it is not always necessary to tie in switches to the burners run circuits as the Mk7 MM is fully capable of turning off the burner if the First Out has been set to Recycle or Non-Recycle. However, local codes may require some First Outs to be tied to the burner run circuit. In this instance it is good practice to tie in the First Out switches into Terminal 53 (Burner On/Off) as shown in the diagram below.

The reason for wiring the First Out Annunciation into Terminal 53 is because a break in this circuit will turn off the burner but will not cause a lockout on the MM. Here, the First Out Annunciation will appear with what First Out has failed for better diagnosis of the problem. Wiring the First Out Annunciation into Terminal 54 (Air Proving Switch) for example, will cause the burner to turn off but the MM will lockout on having no air pressure rather than displaying the First Out that has failed.

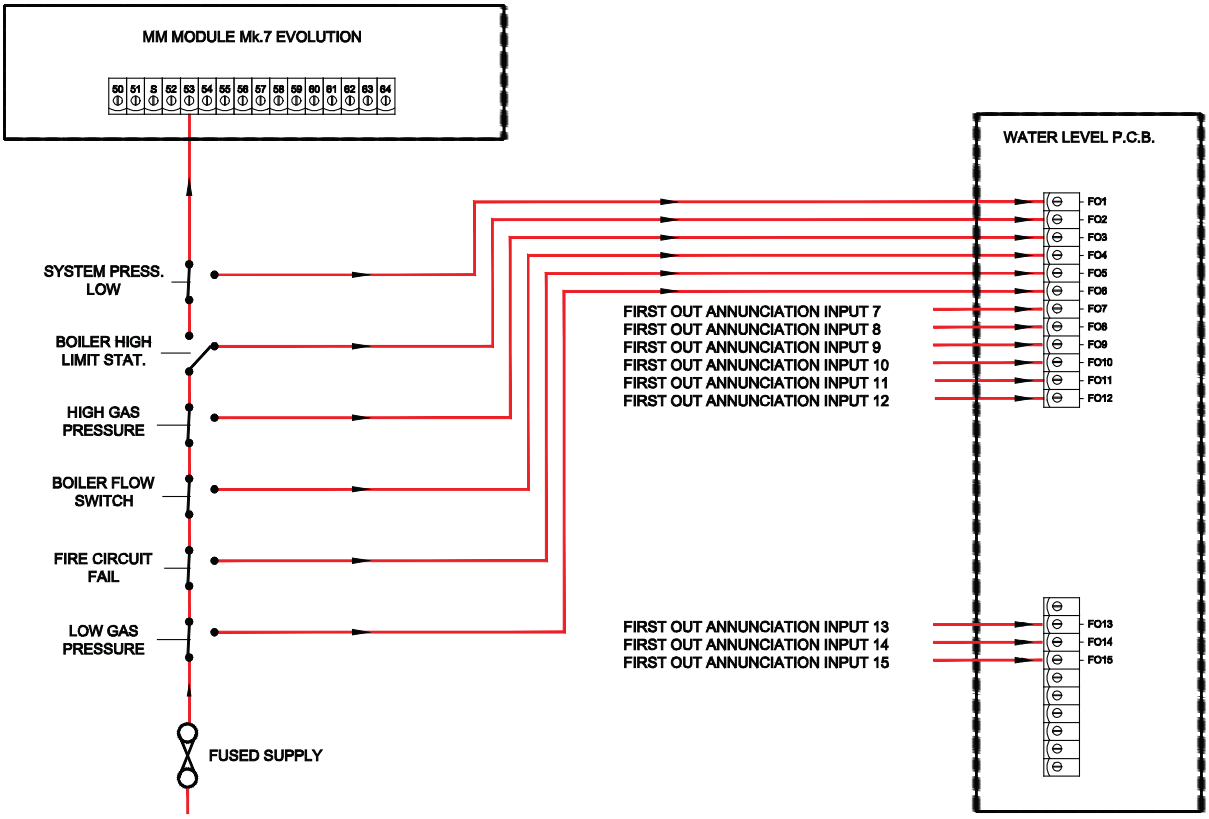

5.5.1 Procedure for wiring First Out Annunciator

The below diagram shows the correct procedure for wiring a field device to the Autoflame First Out Annunciator. The switch required is a double throw contact, this is one with a Common (C), Normally Closed (NC) and Normally Open (NO) contacts. Figure 1 shows the device being a gas pressure switch, announced on FO1.

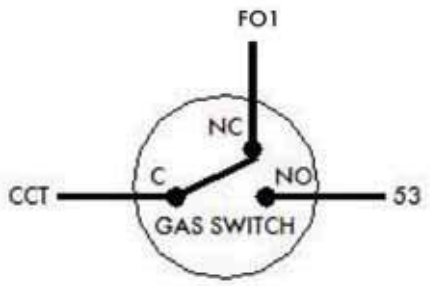

Switch shown in a failed condition

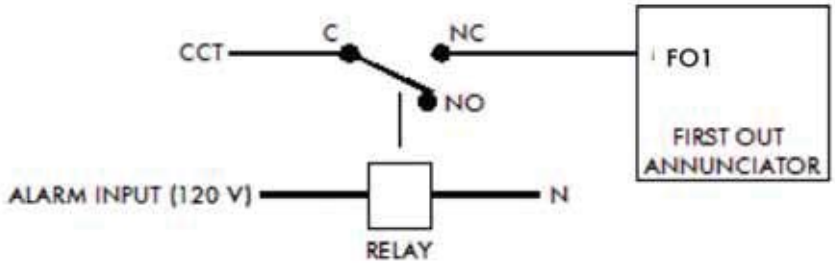

Alarm input shown inverse condition i.e. voltage input signal removed.

5.6 INTEGRATING OTHER WATER LEVEL CONTROLS WITH AUTOFLAME

As a confidence building exercise it is sometimes requested by a client that he would also like to retain his old float type level controls as a "belt & braces" solution. Autoflame have allocated 3 terminals to accommodate "high", "1st low" and "2nd low". This is a user selectable facility which can be accessed by the water level "SETUPS" in the MK7. Shown below is the connection schematic which shows how this can be implemented if required.

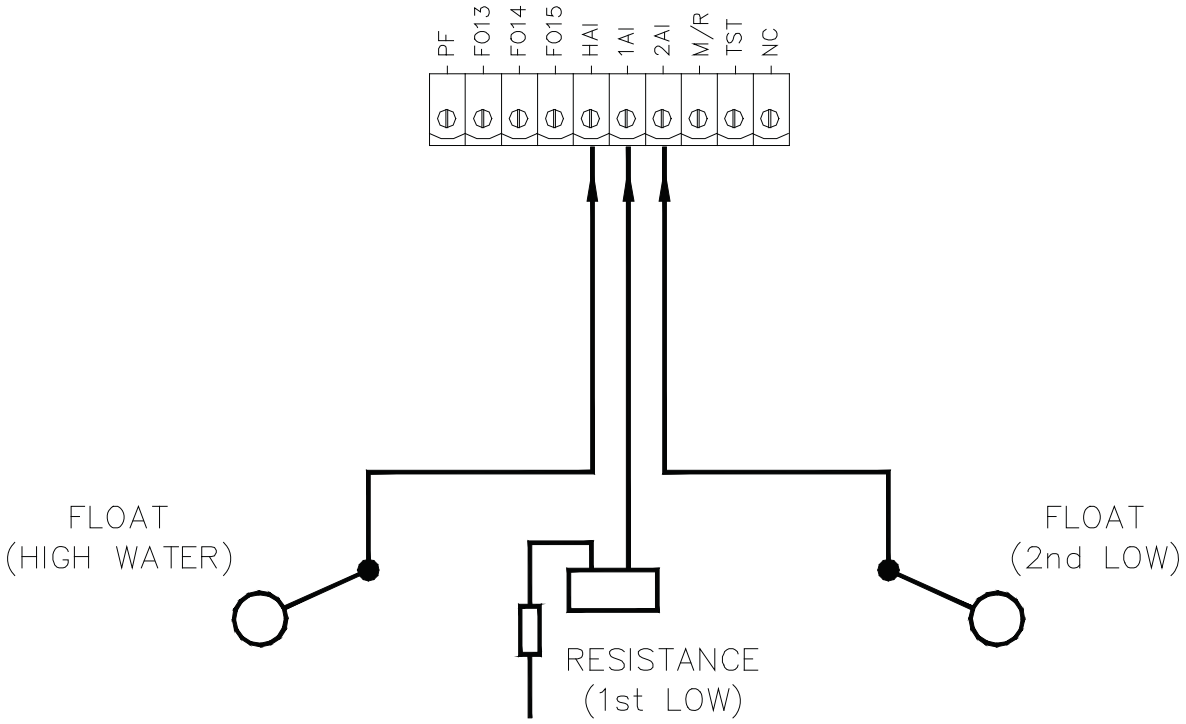

5.7 STEAM FLOW METERING

Steam flow metering is a very commercially attractive capability that exists within the Autoflame level control package. This unique idea for steam flow measurement and metering has been granted an international patent for the engineering concepts involved. By the addition of two temperature detectors it is possible to extrapolate accurately steam flow from a boiler both as an instantaneous value and a totalized amount over time. This means that by the addition in price of two temperature sensors, the end client can be offered the benefit of a full steam flow metering package. This avoids the cost of an expensive steam flow meter and orifice plate that is typically accurate at the higher firing rates only. An explanation of how this is achieved is detailed below.

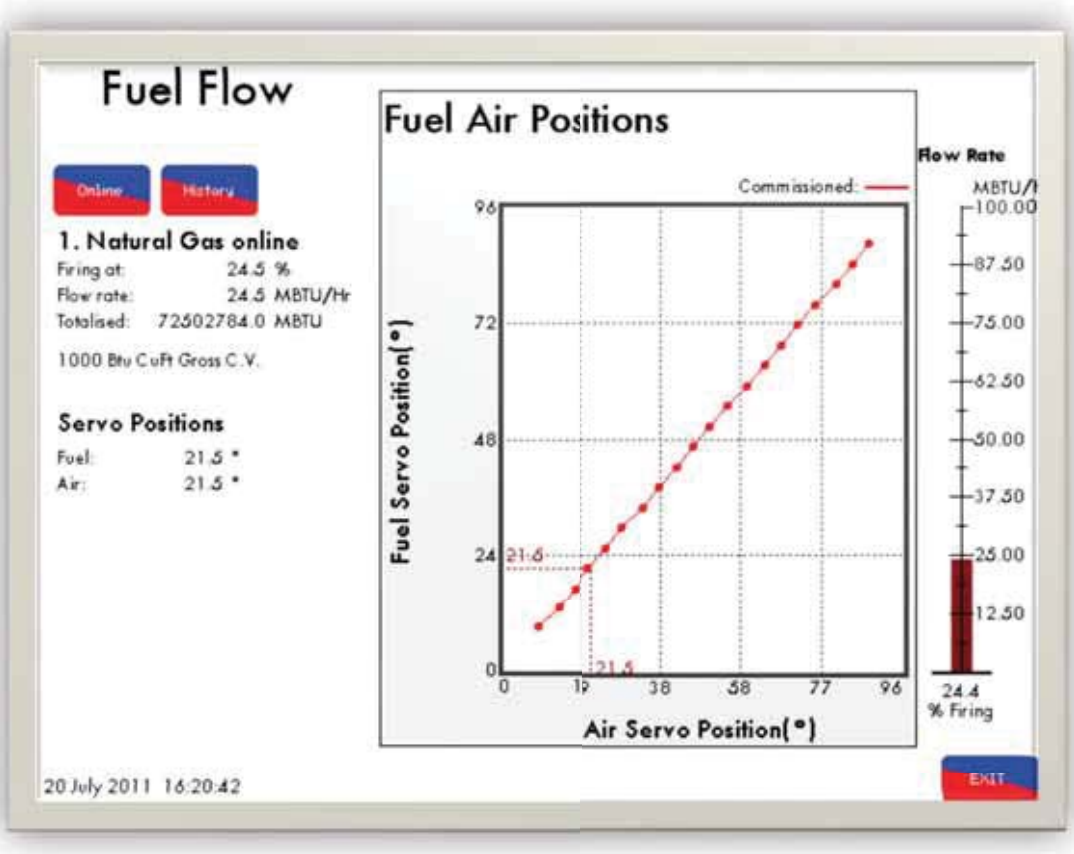

From Fuel Flow Metering it can be seen that the fuel gross calorific heat input is 24.5 million BTU/hr (example).

Therefore	24,500,000	BTU/hr	(gross fuel calorific value)
Less	245,000	BTU/hr	(1% loss standing losses)
Less	4,365,900	BTU/hr	(18% stack loss E.G.A)
Equals	19,889,100	BTU/hr	(net calorific value of the fuel into the wet side of the boiler)

From Steam Flow Metering it is possible to calculate the amount of heat necessary to raise 1lb of water from 180 degrees F (feed water temp) to 85 psi G steam at 327 degrees F. From standard steam tables held in memory the amount of heat required is calculated to be 1040 BTU. This figure is the latent heat of liquid into steam (gas) plus the sensible heat components.

Note feed water temperature and steam temperature are measured by the systems temperature sensors.

$$\frac{19{,}889{,}100 \text{ BTU}}{1040 \text{ BTU/hr of steam}} = 19{,}124 \text{ lb/hr}$$

If blow down losses are calculated to be 3% (example) the system allows this correction to be entered.

$$19{,}124 \times 0.97 = 18{,}550 \text{ lbs/hr Steam Flow}$$

Instantaneous values are calculated using the above. Totalized values for steam flow use the same mechanism but sample values are taken every 5 seconds and integrated over the run time of the boiler burner system.

5.7.1 Steam Flow Metering Incorporating a Deaerator

A common practice in steam generation is the use of a "deaerator" to remove the oxygen from the feed water and hence reduce the incidence of oxygen corrosion in the boiler, steam & condensate pipe work.

The principle of a deaerator is to mix the make-up water with the condensate return and live steam direct from the boiler in a tank. Flash steam may also be directed back to the tank. The effect is to mechanically "scrub" the oxygen from the feed water and also to preheat it before it is pumped to the boiler.

In the system as set out above it is no longer valid to measure the temperature of the feed water just before it enters the boiler as the inlet temperature for the "steam meter" calculation. This water has already been preheated by steam from the boiler and therefore this additional energy should not be taken into the software calculation.

The solution is to treat the boiler and deaerator as one system. The energy into the system is supplied by the burner and the inlet temperature is the "weighted average" of the condensate return temperature and makeup water temperature. The outlet steam temperature is measured by a temperature sensor in exactly the same way as in a system without a deaerator.

5.7.1.1 Steam Flow Measurement for Multi Boilers with Steam Deaerators

1) A flow meter is fitted into the condensate return and into the cold water makeup pipelines. A PT1000 temperature detector is fitted into both condensate and cold water make up pipelines (T1 & T1A).

2) Each flow meter has a 4-20mA output. In each case 4mA equals '0' gallons per minute or litres per second, 20mA equals the maximum range of the meter. The maximum range must be entered into the MK7 via setup options (GPM or L/sec)

3) From the information /data collected as in '2' the "weighted" temperature of the feedwater to the boilers can be calculated. The "weighted" temperature of the feed water is distributed to each of the MK7 (as in our example dwg no: 5211). The weighted temperature is sent digitally via the RS485 data transmission line to each MK7 (Terminals 27 & 28).

4) Each Water Level P.C.B. has its own steam temperature sensor mounted at the steam outlet on each boiler (T2) see Section 5.7.3.

5) It is important that the No:1 MK7 with Water Level P.C.B. is not powered down as the data transmission would 'stop'. If the No:1 is switched off out of necessity then the default "weighted" value temperature entered at the time of commissioning would be used until the No:1 and its data transmission were reinstated. In this way maximum accuracy in the steam flow rate calculation can be guaranteed.

When "Imperial" units are selected (US spec) the following units of measurement are used:

Steam Flow = lb/hr
Liquid Flow = U.S. Gallons/min
Temperature = Degrees F
Heat Flow = BTU/hr
Heat = BTU

When "Metric" units are selected (Euro spec) the following units of measurement are used:

Steam Flow = Kg/hr
Liquid Flow = Litres/sec
Temperature = Degrees C
Heat Flow = MW
Heat = KJ

5.7.2 Steam Flow Metering Incorporating a Deaerator, Calculations

1: First the percentage "Make up" in the "Feed water" must be calculated.

Where %Mu = % Cold make up water
V1 = Volume of condensate return water
V2 = Volume of cold make up water

$$\%Mu = \frac{100 \times V2}{(V2+V1)}$$

Example: 1
Steam boiler with a volume of condensate return at 40 GPM and make up water at 8 GPM

$$\text{Make up } \% = \frac{100 \times 8}{(8+40)} = 16.7\%$$

2: To calculate the second part to establish the "Weighted Average Temperature" the following equation is used.

Where Tave = Weighted Average temperature
T1A = Temperature of condensate
T1 = Temperature of make up water
%Mu = Percentage of make up water

$$Tave = T1A - \frac{(\%Mu \times (T1A-T1))}{100}$$

Example: 2
Steam boiler with condensate return temperature of 176°F and a make up water temperature of 41°F. From the above example (1) the make up percentage is 16.7%

$$\text{Weighted Average} = 176 - \frac{(16.7 \times (176 - 41))}{100} = 153.4°F$$

To implement the above control form the following calculations have been imbedded in the revised software to obtain the "Weighted Average Temperature" (T ave).

5.7.3 Schematic For Steam Flow Application With a Deaerator

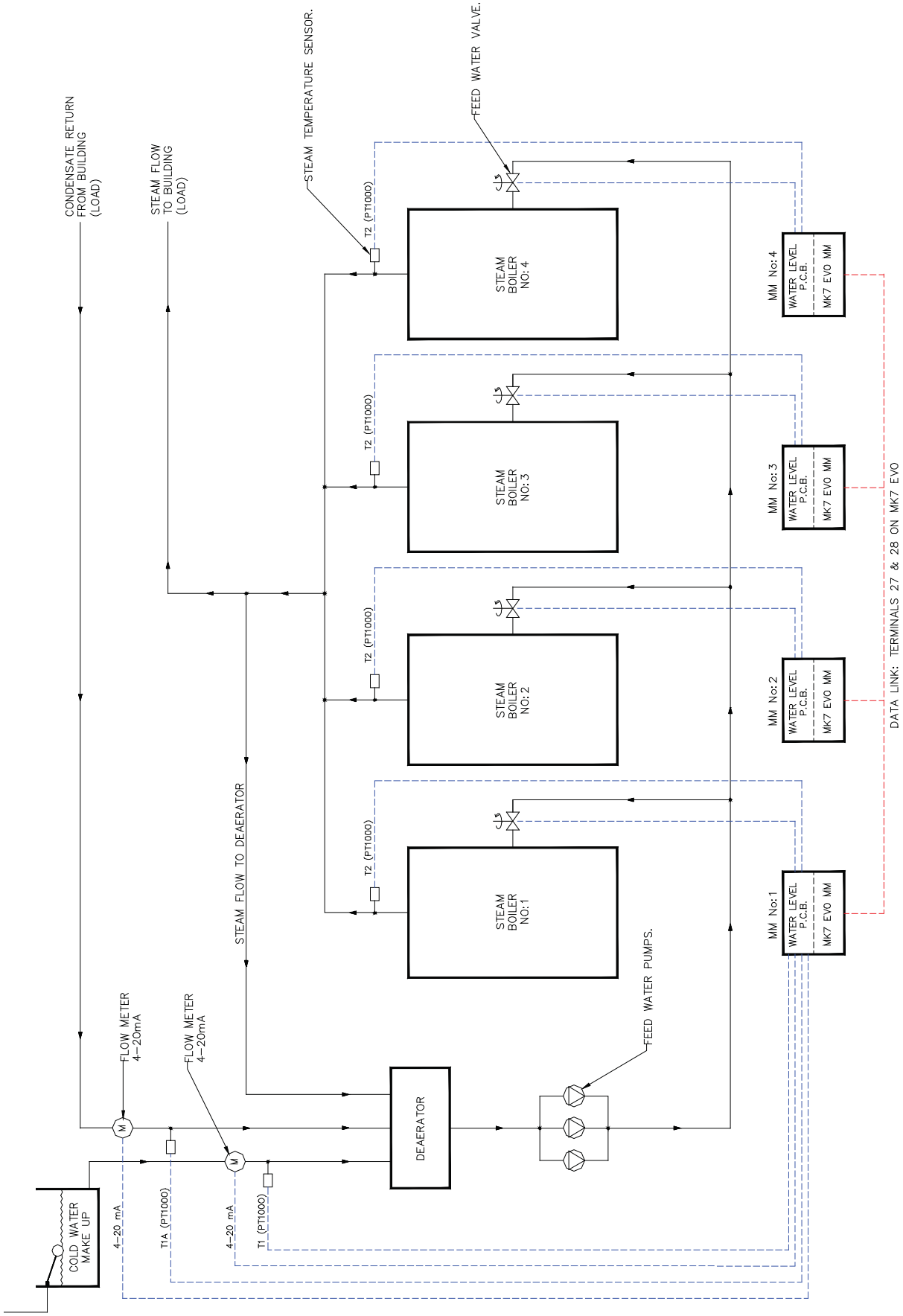

5.7.4 Schematic For Steam Flow Application Without a Deaerator

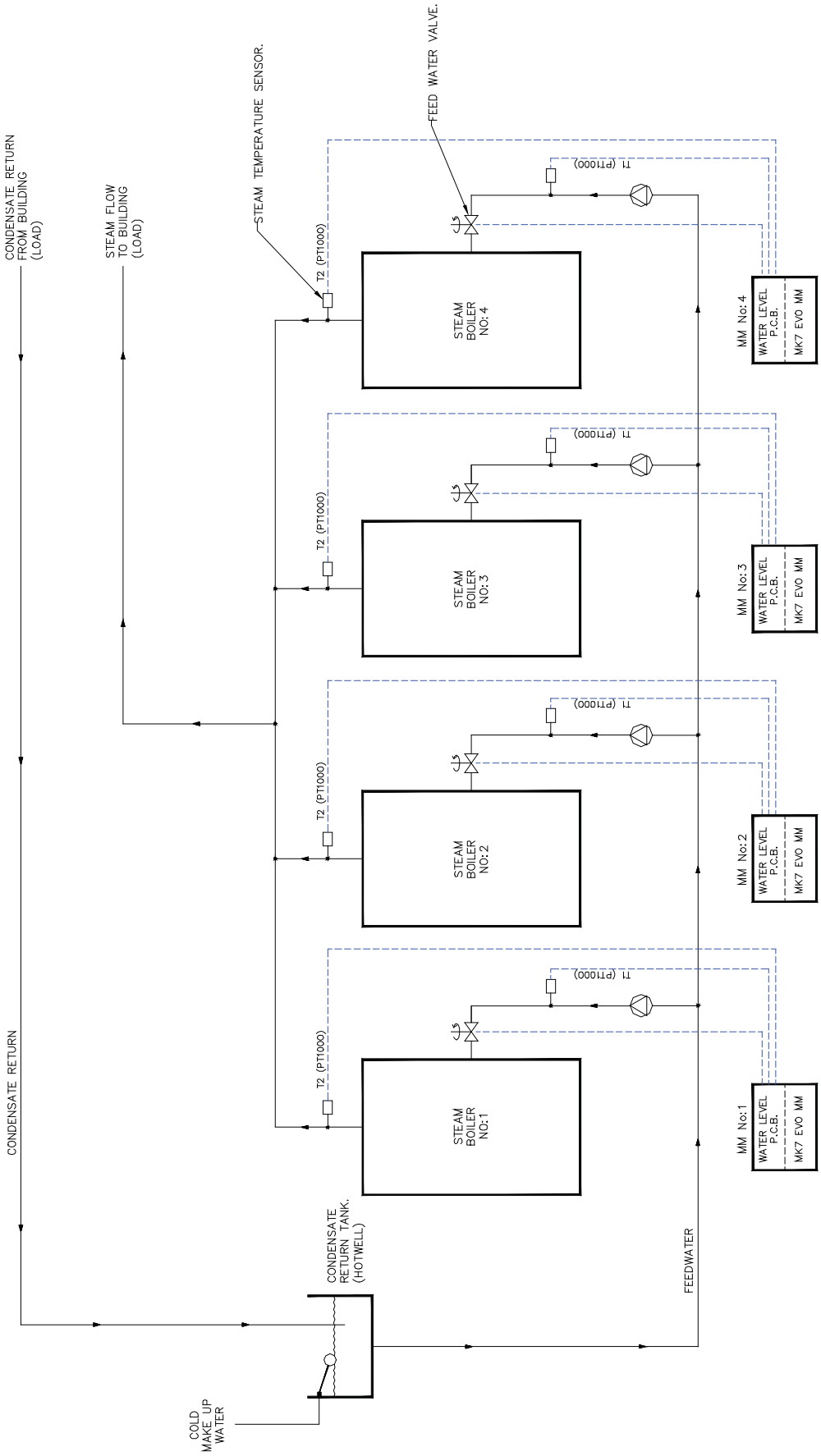

5.8 HEAT FLOW & HOT WATER FLOW METERING

Heat Flow Metering is simply measuring the amount of heat being transferred to the water by a hot water boiler. If we know the stack losses and the standing losses of the boiler at any moment then whatever energy is left over must be going into the water.

From the EGA stack losses = 100 – combustion efficiency

Radiation losses are specific to the boiler, 1% radiation losses are typical for a packaged boiler operating at maximum continuous rating. The loss is constant regardless of boiler output so at 50% firing rate it would be 2% of the energy input.
The total heat in at any time is given by the heat flow metering so we can calculate the instantaneous heat going into water. By integrating these values we can get a totalised value.
Set out below is an example together with relevant calculation, these calculations are embedded in to the software in the MK7 version of the water level PCB.

5.8.1 Calculation for Heat Output & Volume Flow

Example
A boiler firing at 75% has an input of 20,472,840 BTU/Hr (6MW). The temperature of the flow (MM Temperature detector) out is 185°F and the temperature of the return T1 is 167°F. The combustion efficiency is 82% (MK7), Radiation losses are 1% at maximum continuous rating.

Description	Imperial units	Metric Units
Firing rate	75%	75%
Input	20.47 MMBTU/HR	6MW
Return Temperature	167°F	75°C
Flow Temperature	185°F	85°C
Sp Ht water	1.0 BTU/lb/°F	4.18KJ/KG/°C
Density Water	60.68lb/cuft @176°F	972 kg M³ @80°C
Combustion Efficiency	82%	82%

$$\text{Efficiency \%} = 100 - \left(\text{stack loss} + \frac{(\text{radiation losses} \times 100)}{75\%}\right)$$

Therefore:

$$\text{Efficiency} = 100 - \left(18\% + \frac{(1\% \times 100)}{75\%}\right) = 80.67\%$$

$$\text{Useful heat into water} = \text{Total Heat} \times \frac{\text{Efficiency}}{100}$$

5.8.2 Heat Flow & Hot Water Flow Metering

Therefore:

$$\text{U.H.W.} = 20{,}472{,}840 \times \frac{80.67}{100} = 16{,}515{,}440 \text{ BTU/Hr}$$

$$\text{Volume Flow in lbs/hr} = \frac{\text{Useful heat MBTU/Hr}}{\text{SP Ht BTU/lb/°F} \times (\text{Flow Temp} - \text{Return Temp})}$$

Therefore:

$$\text{lbs/hr} = \frac{16{,}515{,}440}{1 \times (185 - 167)} = 917{,}397 \text{ lb/Hr}$$

Note:- Density of water at 176°F = 60.68lbs cu ft

Therefore:

$$\text{Cu ft Hr} = \frac{917{,}397}{60.68} = 15{,}118 \text{ cu ft Hr}$$

Note: - 1 cu ft Hr = 0.124676 US G.P.M.

Therefore:

15118 x 0.124676 = 1884.85 US G.P.M.

Volume flow in US G.P.M = 1884.85

It can be seen from the above that by adding the water level P.C.B. and a return temperature detector to the MK7 system that you get the following additional useful information.

"Useful heat into water" (BTU/hr) &
"Volume flow" (US G.P.M)

This is displayed on the screen of the MK7.

The direct benefit is that you have a "Heat meter" and "Flow meter" for any hot water boiler.

5.8.3 Schematic For Heat Flow Metering Application

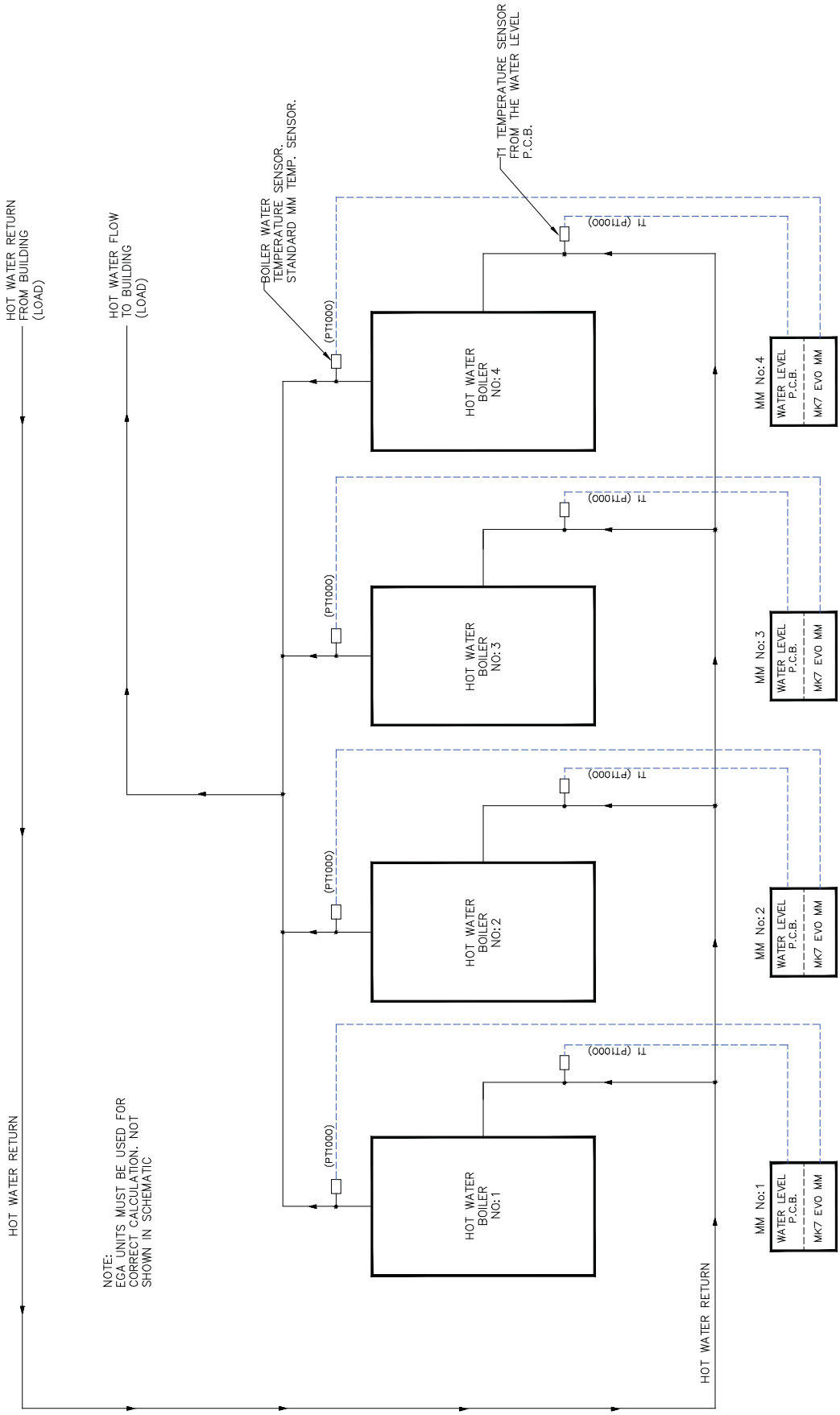

5.9 WAVE SIGNATURE EXPLANATION

Wave signature in a boiler is a combination of the following main components.

5.9.1 Breaking Bubble/Spray

Bubbles of steam breaking at the boiler water level surface. These precipitate little droplets as spray several inches above the water surface in an upwards direction.

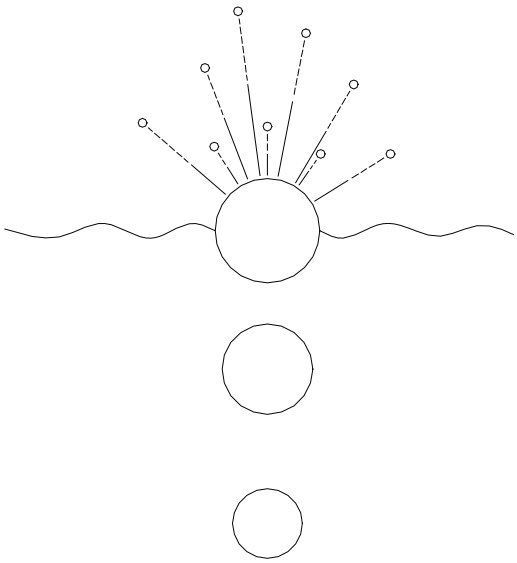

The droplets tend to coat the surface of the level probe which in turn will read as an increase in the water level. This situation is largely avoided by fitting anti surge pots inside the boiler shell.
When the probes are fitted externally to the boiler shell this situation can not arise.

5.9.1.1 Thermal Currents (heat energy in water)

Many bubbles breaking simultaneously and thermal currents from the furnace tube and 2nd, 3rd, 4th pass smoke tube create their own turbulence/wave signature on the surface of the water. The typical result is short choppy/peaky wave patterns as below.

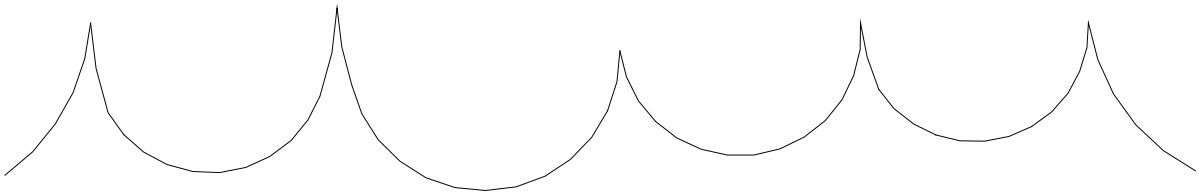

A second set of turbulence is the wave reflections off the sides of the boiler. The whole of the above is largely attenuated away by mounting the probes externally to the main boiler shell in a separate pot or pots.

5.9.1.2 Steam Flow Induced Surge

When the boiler is producing high quantities of steam, this steam is travelling over the surface and can produce swells and surging motions (longwave).

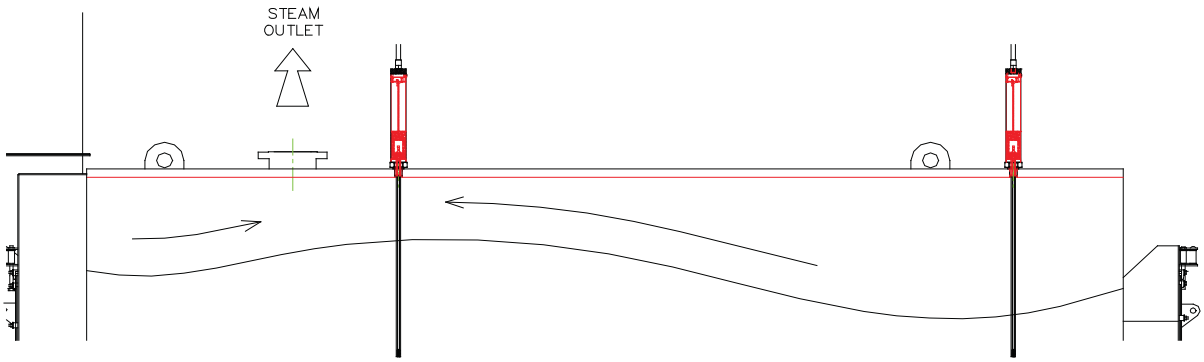

The above situation will be shown in high relief when the steam outlet is at one end of the boiler and one level probe is sited adjacent to the steam outlet and the second probe is sited at the opposite end of the boiler. The user adjustable probe disparity value may have to be increased to take this situation into account.

5.9.1.3 Foaming

Foaming on the surface of the boiler is brought about by a less than adequate blow down regime and/or not controlling and managing TDS in the appropriate manner. Incorrect or insufficient water treatment will exacerbate all of the above. Foaming will read as a step increase in water level. This situation should only ever occur in a badly managed boiler plant.

It can be seen from the above examples that wave signature will tend to be very installation specific.
It is driven by boiler size, water treatment regime, position of heat transfer surface relative to water level and the load pattern imposed on boiler.
The Autoflame system takes into account all of these variables and uses them to create a control algorithm that produces perfect level control with absolute safety.

5.9.2 Schematic Explanation of the Water Level Probe Operation

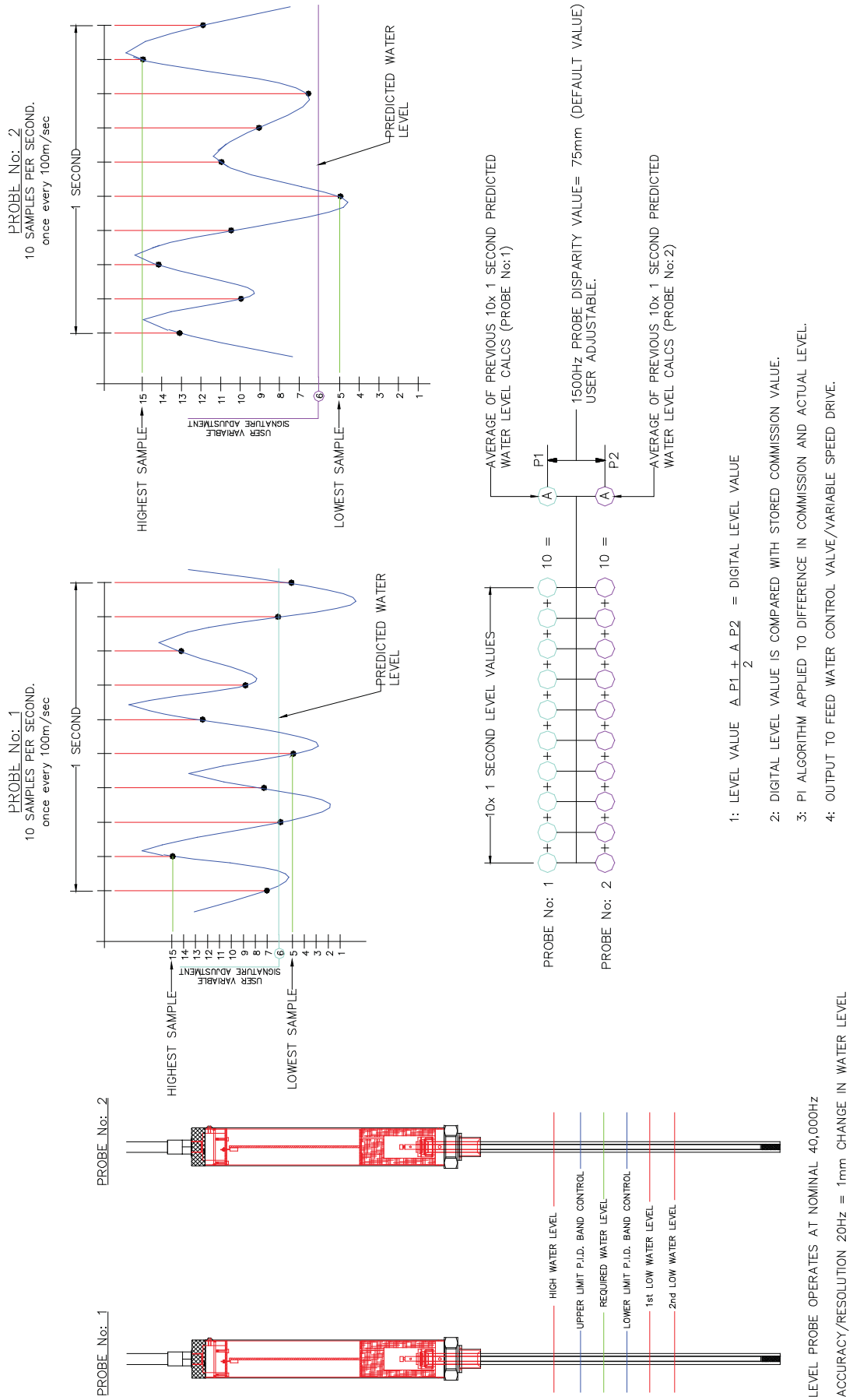

5.9.3 Schematic Of The Probe Sampling Hardware

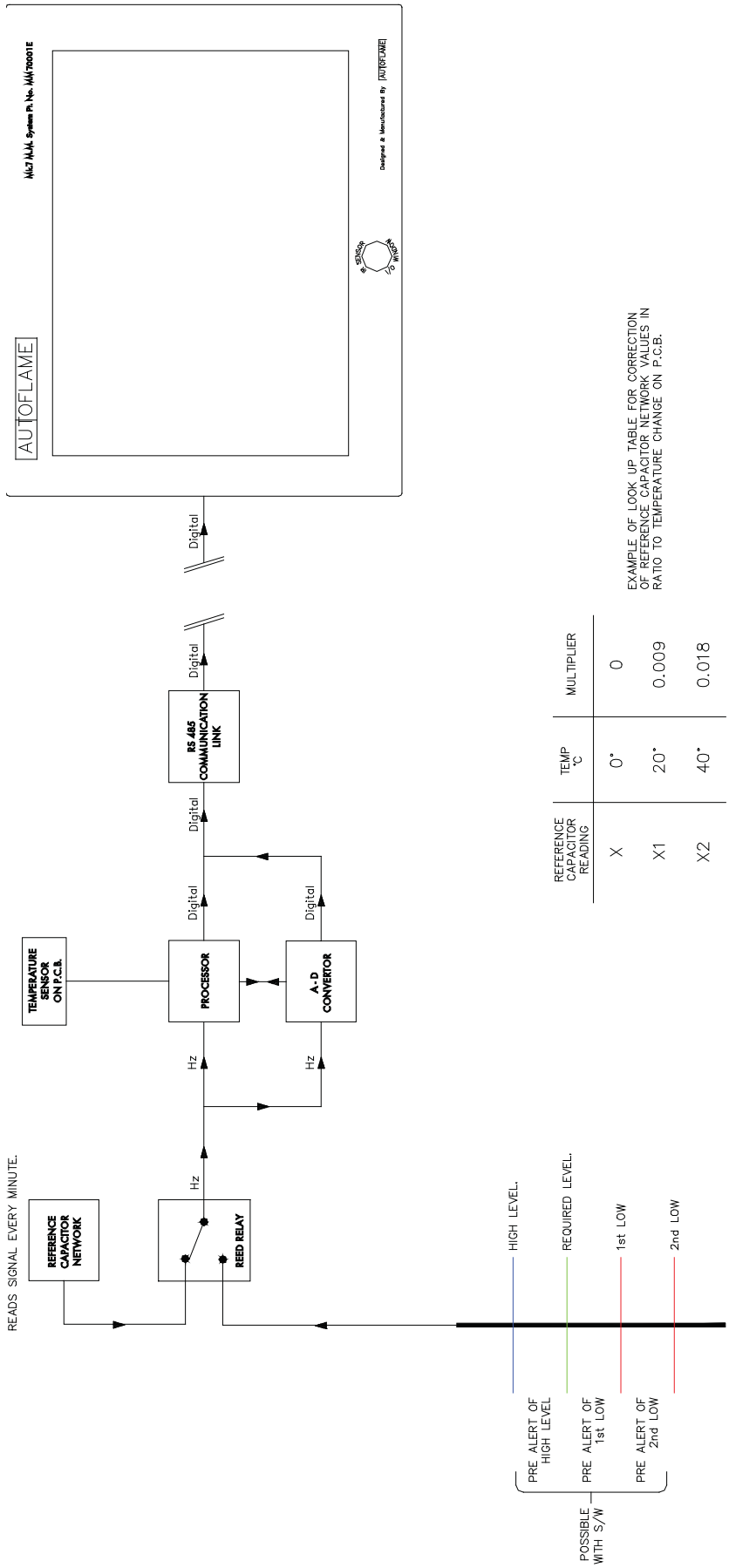

5.9.4 Capacitance Probe - General Installation Information

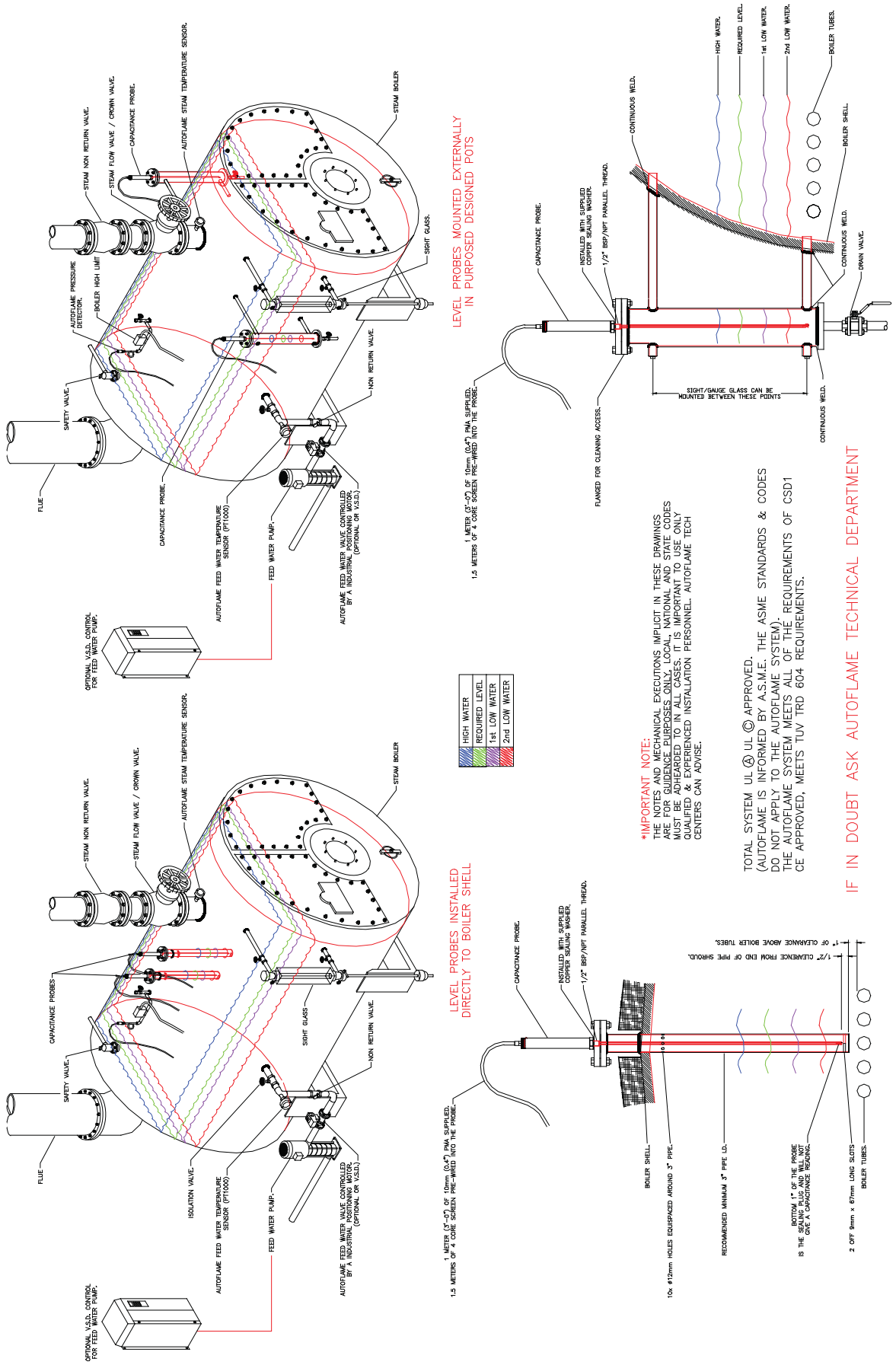

5.9.5 Capacitance Probe - Externally Mounted Pots

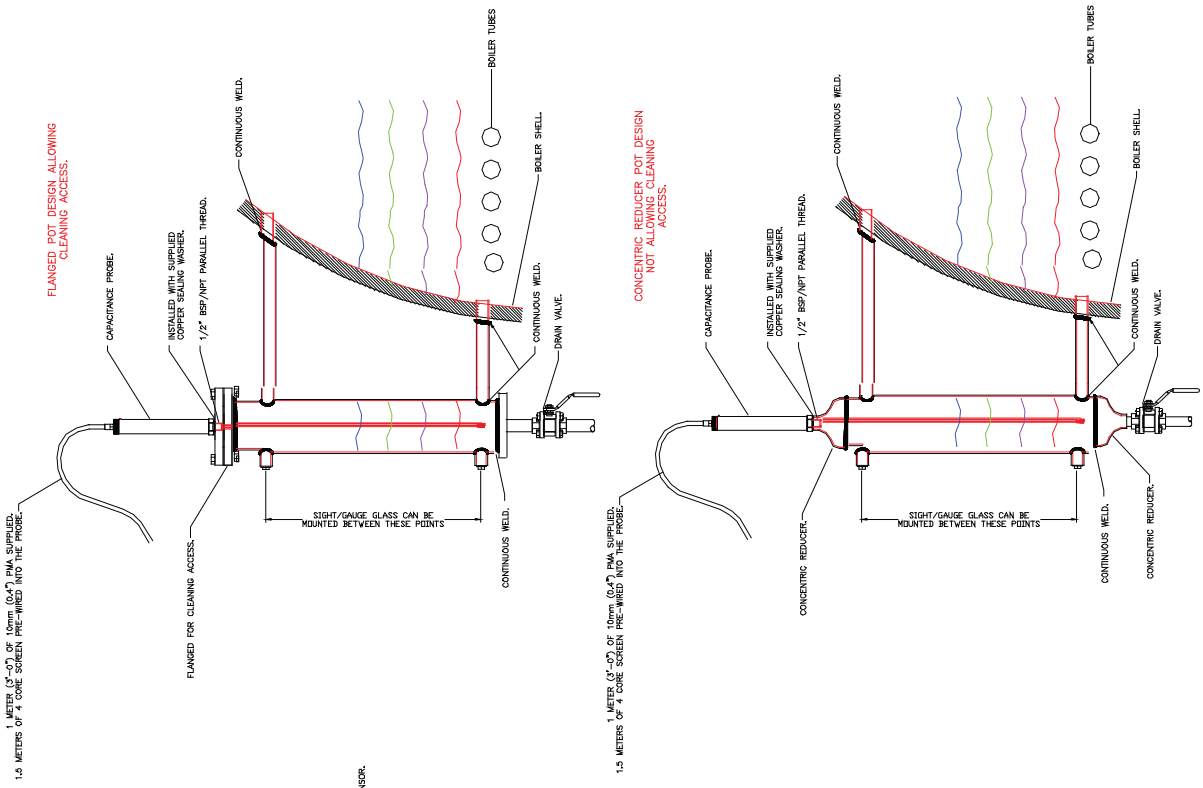

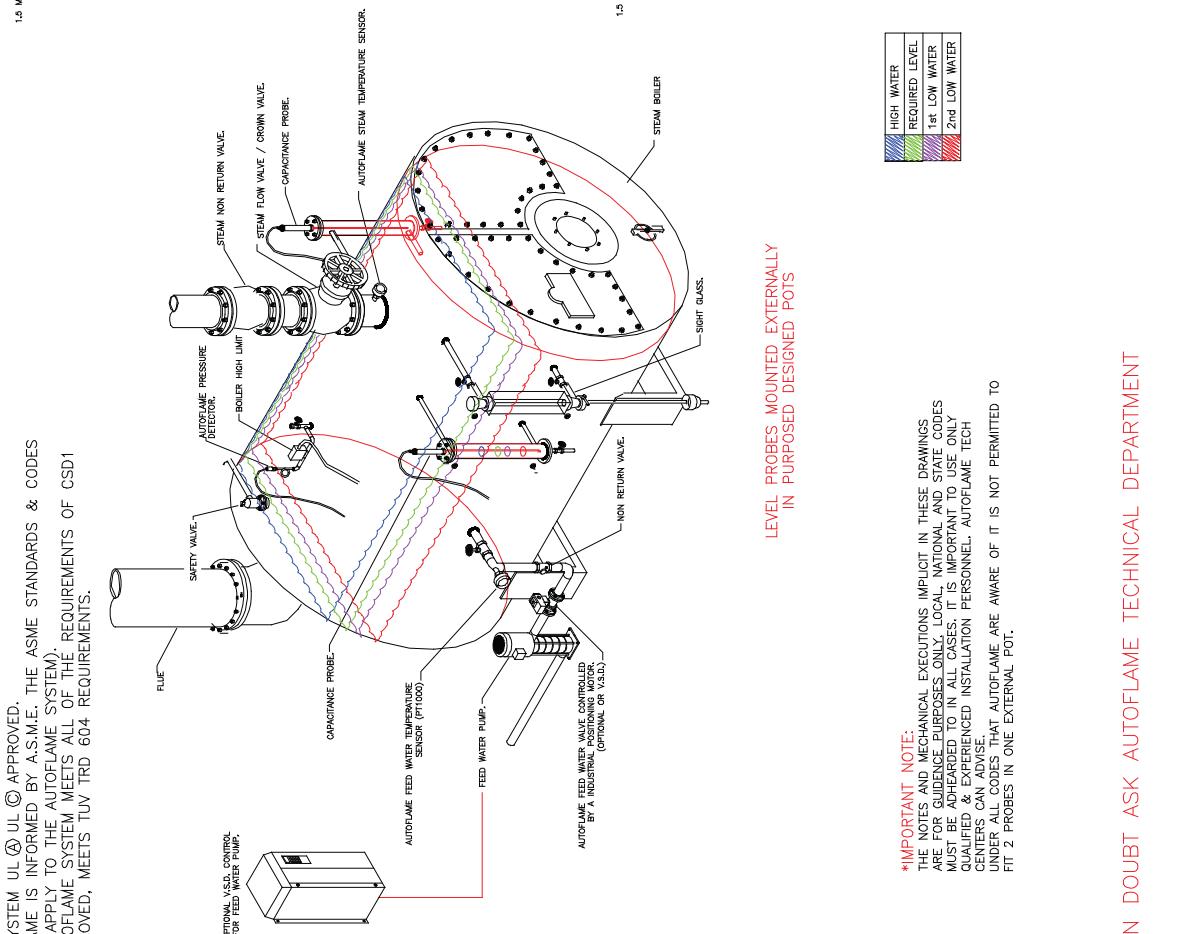

5.9.6 Capacitance Probe - Internally Mounted Probes

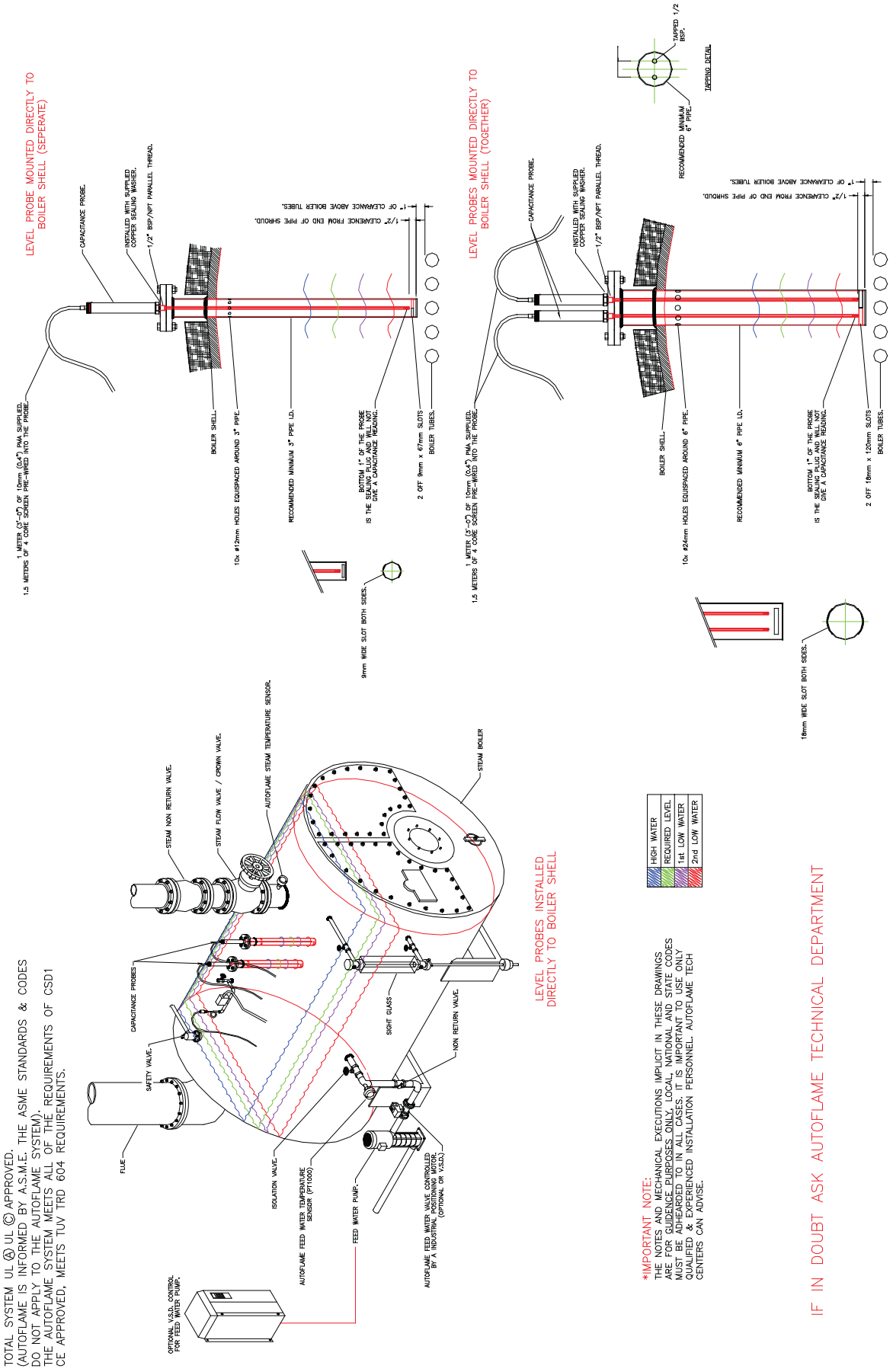

5.9.7 Capacitance Probe - Installation Information For A Water Tube Boiler

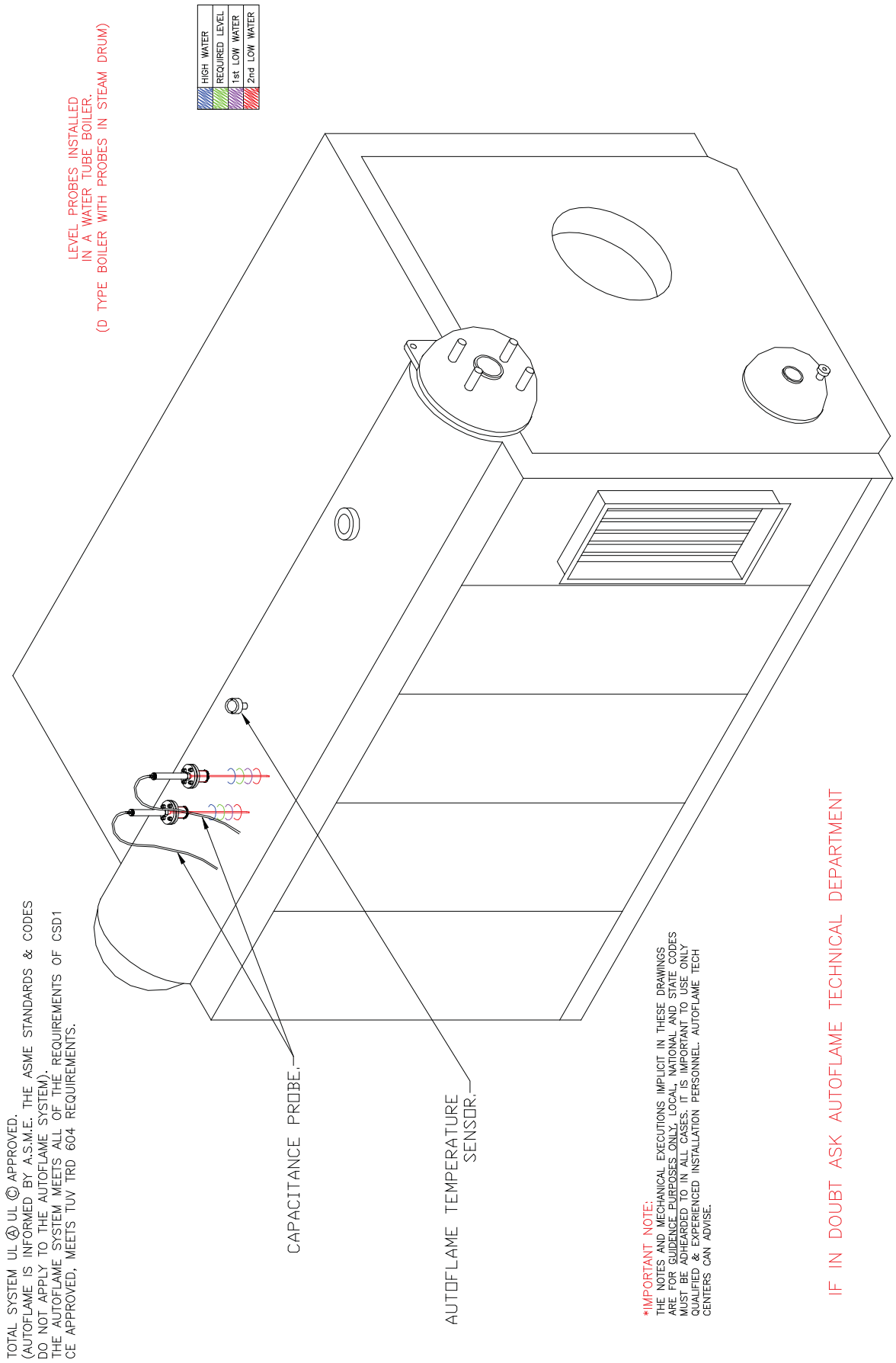

5.9.8 External Probe Chamber Dimensions

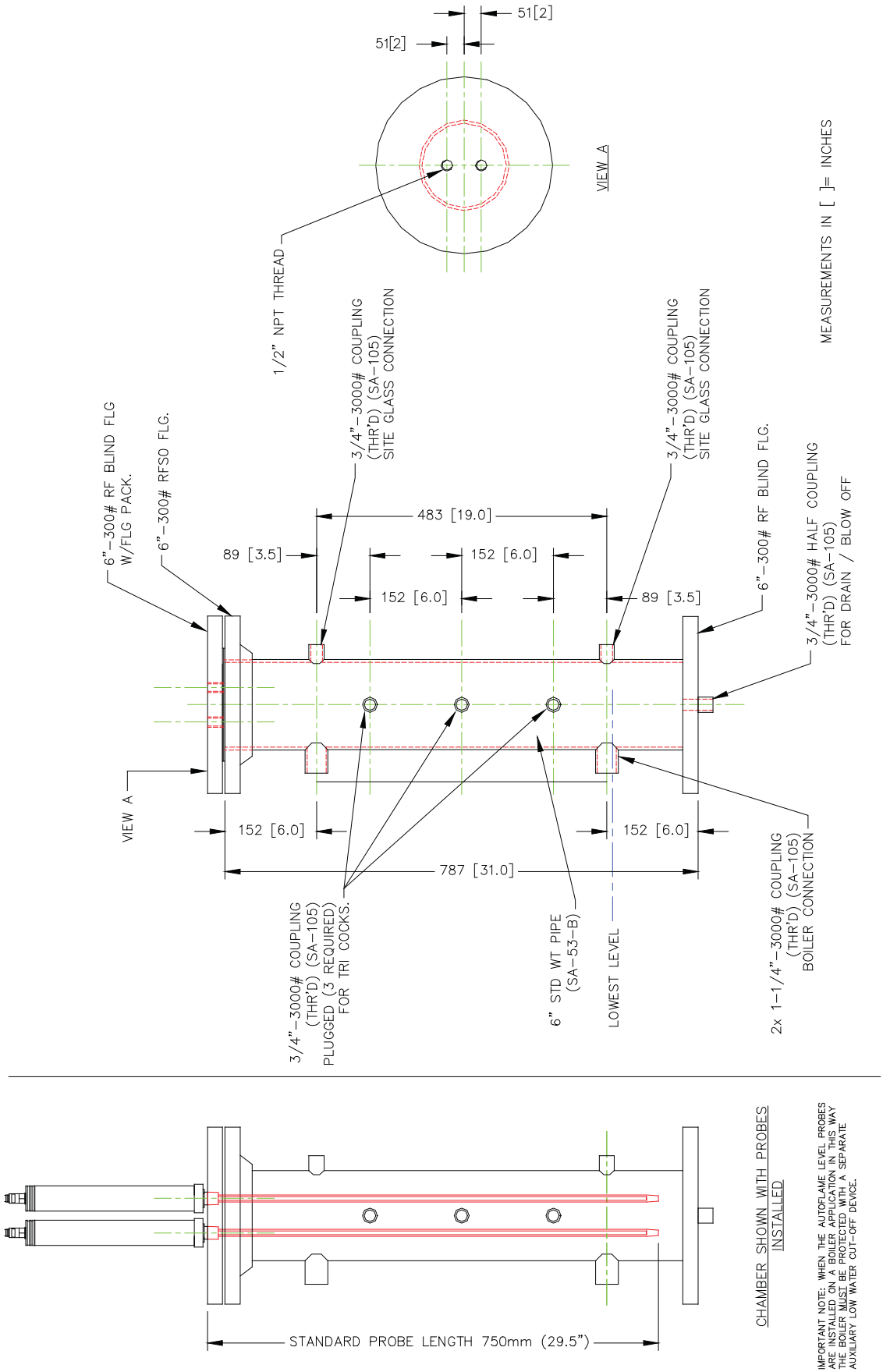

5.9.9 Capacitance Probe Specification

Capacitance Probe Specification

Probe connection: ½"
Standard probe length: 20", 30", 40", 50" and 60"
Other probe lengths available upon request
Stainless steel probe
PTFE coated
IP 68 rating
Temperature rating of housing: 0 - 70°C (32 - 158°F) - ambient temperature of air around the boiler
Flying Lead Length: 2m

Note: The probes must not be cut. If the probes are cut this will act as a short between the positive and negative plates of the capacitor and will stop the probes from working.

If the probes are mounted directly into the boiler shell it is important to lag the flanges in order to avoid overheating of the electronics.

The following table illustrates the pressure tests on the probes:

Nominal Size of Line	Maximum Allowable Pressure	Maximum Allowable Temperature	Test Pressure
½" (15mm)	464 psi (32 bar)	446°F (230°C)	870 psi (60 bar)

5.9.10 Autoflame Modulating Feedwater Valve

5.9.10.1 Feed Water Valve Exploded Diagram

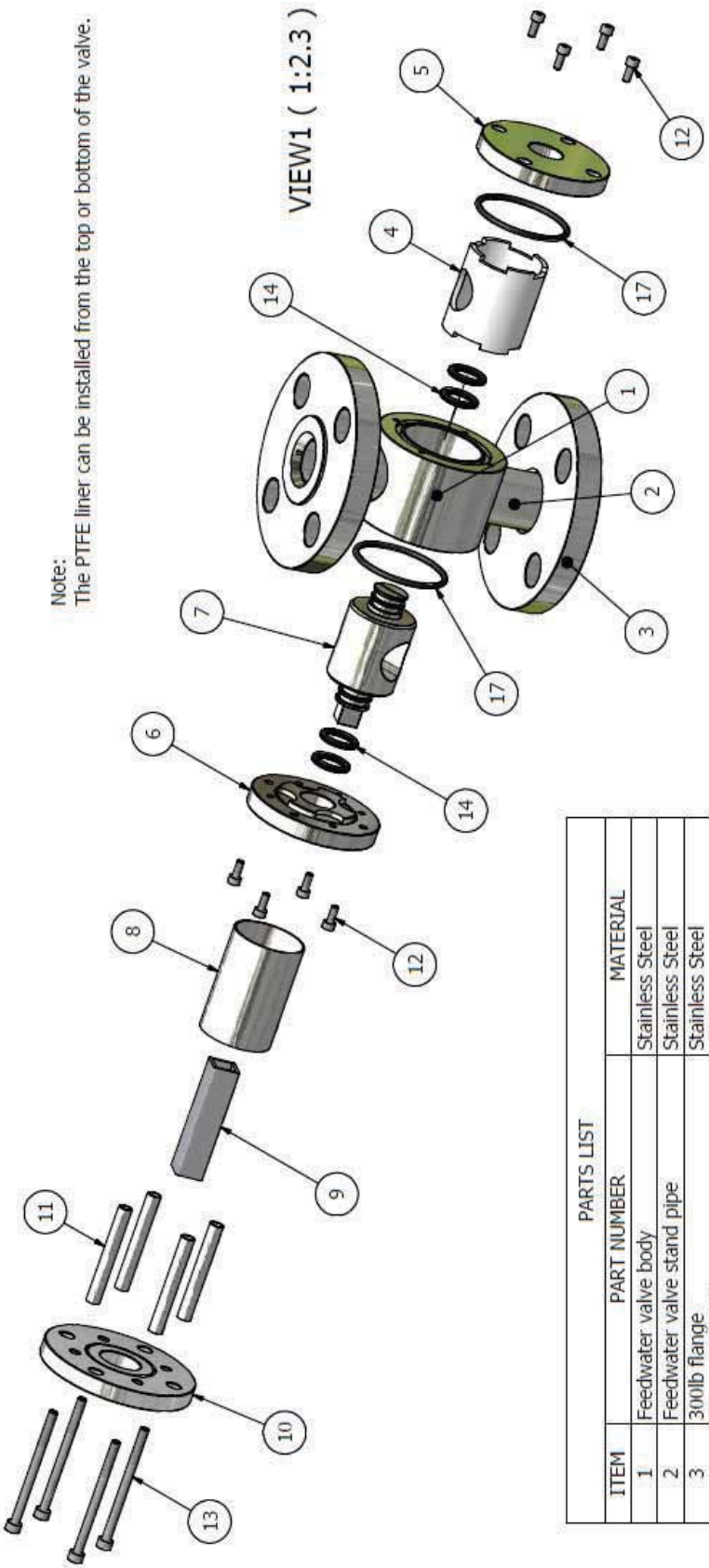

Note:
The PTFE liner can be installed from the top or bottom of the valve.

Spare Kit		
ITEM	PART NUMBER	MATERIAL
4	Internal PTFE liner	PTFE
12	M4 x 10	Stainless Steel
13	M5 x 70	Stainless Steel
14	Bobbin shaft o-ring seal	Viton
17	Body o-ring seal	Viton

PARTS LIST		
ITEM	PART NUMBER	MATERIAL
1	Feedwater valve body	Stainless Steel
2	Feedwater valve stand pipe	Stainless Steel
3	300lb flange	Stainless Steel
4	Internal PTFE liner	PTFE
5	Feedwater valve bottom plate	Stainless Steel
6	Feedwater valve top plate	Stainless Steel
7	Feedwater valve bobbin	Stainless Steel
8	Location spacer	Stainless Steel
9	Unic Servo extension tube	Steel, Mild
10	Unic Servo mounting plate	Aluminum-FC1
11	Servo plate spacer	Stainless Steel
12	M4 x 10	Stainless Steel
13	M5 x 70	Stainless Steel
14	Bobbin shaft o-ring seal	Viton
17	Body o-ring seal	Viton

5.9.10.2 Feedwater Valve Specification

Valve sizes: ½" to 2"
Servo Torque: 37ft.lb
NEMA 4 rated
IP65 rated
Position feedback potentiometer from servomotor
Flange spec: ANSI 300lb or PN40

Note: The feedwater valve is not classed as a full shut off valve (bubble tight). However, the tolerances are set very tight thus restricting flow through the valve. For this reason it is advised to place a normally closed solenoid valve in series with the feedwater valve. The further advantage of this is that in the event of a power failure the feedwater valve will remain in the position at loss of power, however, the normally closed solenoid valve will shut off restricting flow to the boiler.

It is essential that an adequate strainer is placed on the feedwater inlet line. The pressure drop across the strainer must be taken into account when sizing the feedwater valve.

The following table illustrates the pressure tests on the valves:

Nominal Size of Line	Maximum Allowable Pressure	Maximum Allowable Temperature	Test Pressure
½" (15mm)	580 psi (40 bar)	446°F (230°C)	870 psi (60 bar)
¾" (20mm)	580 psi (40 bar)	446°F (230°C)	870 psi (60 bar)
1" (25mm)	580 psi (40 bar)	446°F (230°C)	870 psi (60 bar)
1 ½" (40mm)	580 psi (40 bar)	446°F (230°C)	870 psi (60 bar)
2" (50mm)	580 psi (40 bar)	446°F (230°C)	870 psi (60 bar)

5.9.10.3 PTFE Liner

The Autoflame feed water control valves have been modified to include PTFE liners. The liners have been incorporated within the design of the valve to assist with applications where the supply feed water is high in particulate, which can lead to premature valve failure. This is particularly applicable where feedwater is insufficiently filtered.

The liners have been designed to be easily replaced for general maintenance and serviceability. The sizing table shows the valves available and the operating pressure requirements. It is important to note the maximum stated differential pressure across the valve should not be exceeded. The differential pressure across the valve has a direct relationship to the velocity of the water through the valve. Excessive velocity will lead to premature failure of the PTFE liner.

5.9.10.4 Replacing the PTFE liner

When replacing the PTFE liner in the valve make sure this is done in a clear area to avoid debris from entering the valve. Make sure the liner is placed on the feed water valve bobbin (7) before inserting into the valve body (1). As shown in the below picture; When the new liner and bobbin is re-assembled into the valve body ensure the constellations are in line with the machined pockets in the bottom plate, also ensure that the liner is in the correct orientation to the valve body as this can be installed 90 degrees out from the ports on the valve.

It is not necessary to remove the entire valve from the pipe work but it is essential that the valve is sufficiently isolated before work begins.

Feed water valve showing PTFE liner installed on bobbin

5.9.10.6 Feedwater Valve Sizing Calculations

Autoflame Part No. WLCV015 - ½" feed water valve water flow calcs @20°C								
Ft/sec	M/sec	ΔP PSI	ΔP Bar	G/hr (imp)	lbs/hr	GPM (imp)	US GPM	Kg/hr
6	1.82	1	0.07	160	1600	2.6	3.1	727
9	2.74	2	0.14	235	2350	3.9	4.6	1068
15	4.57	5	0.34	380	3800	6.3	7.5	1727
21	6.40	10	0.68	560	5600	9.3	11.1	2545

Autoflame Part No. WLCV020 - ¾" feed water valve water flow calcs @20°C								
Ft/sec	M/sec	ΔP PSI	ΔP Bar	G/hr (imp)	lbs/hr	GPM (imp)	US GPM	Kg/hr
8	2.43	1	0.07	460	4600	7.7	9.2	2090
12	3.65	2	0.14	665	6650	11	13.2	3022
19	5.79	5	0.34	1100	11000	18.3	21.9	5000
28	8.53	10	0.68	1630	16300	27.1	32.58	7409

Autoflame Part No. WLCV025 - 1" feed water valve water flow calcs @20°C								
Ft/sec	M/sec	ΔP PSI	ΔP Bar	G/hr (imp)	lbs/hr	GPM (imp)	US GPM	Kg/hr
13	3.96	1	0.07	1560	15600	26	31.2	7090
21	6.4	2	0.14	2300	23000	38.3	45.9	10454
32	9.75	5	0.34	3800	38000	63.3	76	17272
46	14.02	10	0.68	5600	56000	93.3	112	25454

Autoflame Part No. WLCV040 - 1½" feed water valve water flow calcs @20°C								
Ft/sec	M/sec	ΔP PSI	ΔP Bar	G/hr (imp)	lbs/hr	GPM (imp)	US GPM	Kg/hr
17	5.18	1	0.07	4700	47000	78.3	94	21363
25	7.62	2	0.14	6700	67000	11.6	134	30454
39	11.88	5	0.34	11200	112000	186.6	224	50909

Autoflame Part No. WLCV050 - 2" feed water valve water flow calcs @20°C								
Ft/sec	M/sec	ΔP PSI	ΔP Bar	G/hr (imp)	lbs/hr	GPM (imp)	US GPM	Kg/hr
21	6.4	1	0.07	10000	100000	166.6	200	45454
31	9.44	2	0.14	15000	150000	250	300	68181
46	14.02	5	0.34	24000	240000	400	480	109090

5.9.10.7 Feedwater Valve GA Drawings

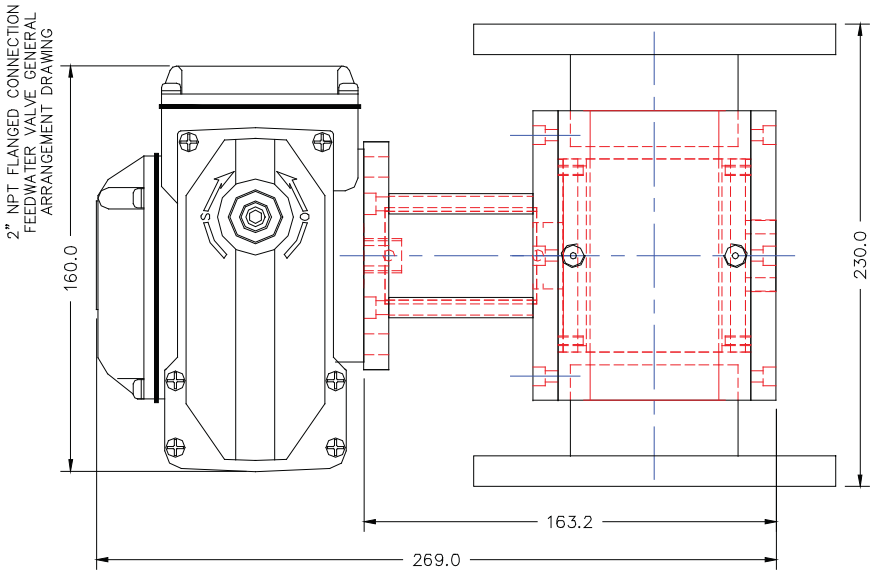

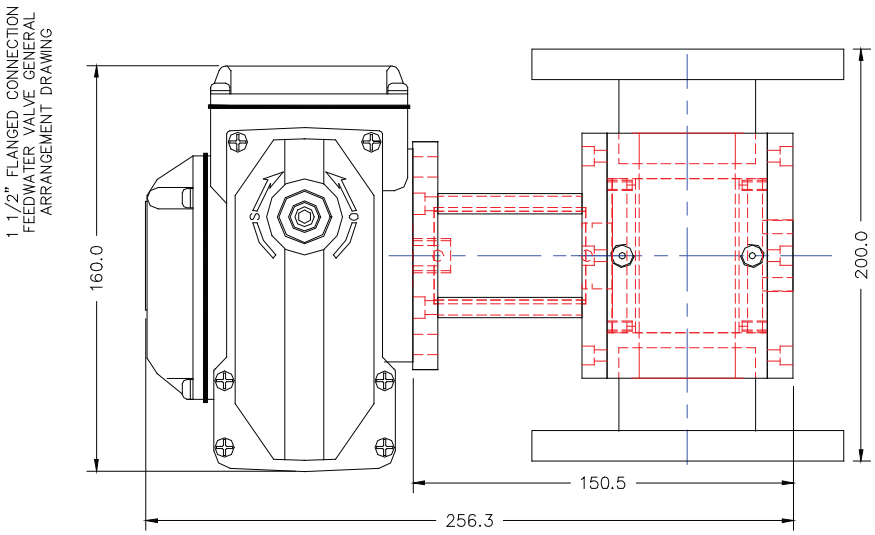

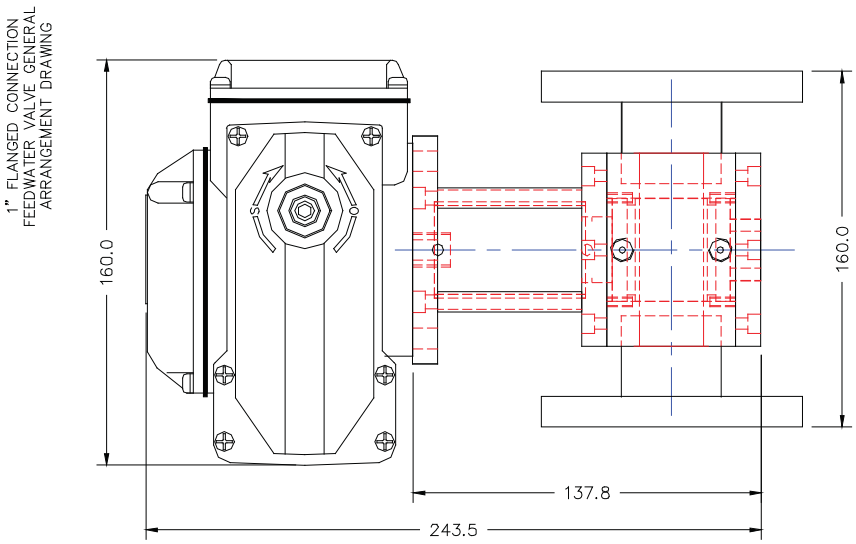

5.10 WATER LEVEL SETUPS

5.10.1 Selecting Water Level Setups Mode

(Note: Ch1, Ch2, Ch3, Ch4, Ch5 and Ch6 refer to the rows of buttons respectively starting with Ch1 at the top)

Water level setup values can be changed by entering the water level setup mode. The password must first be entered.
To enter the password follow the steps listed:

Either deselect and then select fuel or power down and restart.

If system is already commissioned, press

when the system starts up.

If the system is not already commissioned, commissioning mode will be entered automatically.

"ENTER PASSWORD" is displayed.
Use the calculator keypad to set the password codes.

Then press

to accept

The "Commission Mode" screen is then entered.
The MM will initially be disabled until commissioning data is entered or on reboot of a software upgrade.

To enable the MM press

and choose 'Water Level Control Active'.

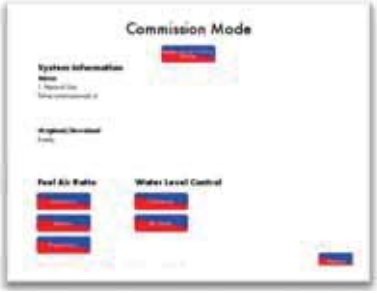

Once activated all the WL Setups can be accessed and changed to the users required setup By pressing WL Setups.

Setup No.	Factory Setting	Setup Value	Description
1.1	Modulating Standard		**Control Type:** Configures the boiler feedwater control type.
		Modulating Standard	Boiler feedwater is fitted with a motorised valve or variable speed drive capable of adjusting the feedwater flow rate. This technique uses PID control to position the feedwater valve to match demand.
		On/Off	Boiler feedwater has no variable flow adjustment and only provides on/off pump control through hysteresis. Using this configuration requires "pump on" and pump off" levels to be set during commissioning. When operating, the feedwater pump will continue to remain ON until the "pump off" point is reached. The pump will then be stopped (OFF) until the water has fallen below the "pump on position before turning back ON. This method does not utilize PID control
		Modulating High High	As modulating standard with additional 'High High' Water position. Boiler feedwater output turns OFF when water level reaches High High water position. Boiler feedwater turns ON when water level falls to the operating level position.
		Modulating Pre-alarms	As modulating standard with two additional level controls. These include a 1st low pre-alarm and a high water pre-alarm. If the water level reaches the pre-alarm levels then the burner will continue to fire. A pulsed audible alarm will become active. The operator can mute this alarm by pressing the water level button on the Mk6 screen. The visual alarm will still be displayed until the fault condition has cleared, i.e. the water level reaches the operating level.
2.1	Modulating Ball Valve		**Feedwater Control Element:** Required for display purposes.
		Modulating Ball Valve	Autoflame motorised ball valve
		VSD	AC Variable Speed Drive
		General Valve	On/Off control Valve
3.1	50%	5% - 100%	**Proportional Band:** When using PID, the controller output is proportional to the error between the current water level and the required operating level. This setup represents a percentage of the total band between 1st low and the control point used to proportion the output.

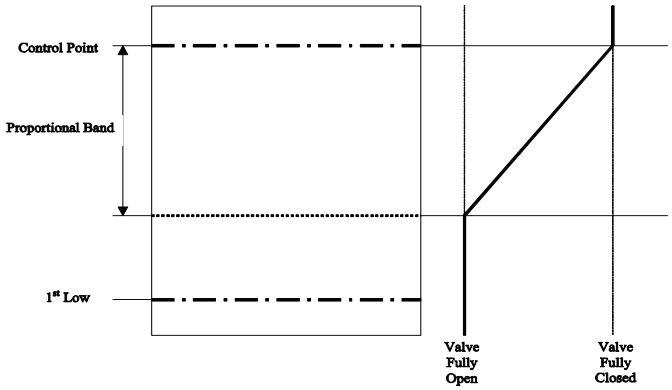

Setup No.	Factory Setting	Setup Value	Description
4.1	20 Seconds	0 – OFF 1–100 Seconds	**Integral Time**: This setup is used to set a period of time n for integral action. At these intervals a percentage (See Integral Factor) of the present offset from the control point variable is added or subtracted to the present proportional value. N.B. If configured as OFF no integral action is performed. Only applies when modulating control type is configured.
4.2	10%	1% - 50%	**Integral Factor**: This setup is used to set the percentage of the present offset from the control point variable to be added or subtracted from the present proportional value. N.B. Only applies when modulating control type is configured. See Also: Integral Time, Proportional Band.
5.1	OFF	0 – OFF 1 - 100 Seconds	**Derivative Time**: With derivative action, the controller output is proportional to the rate of change of the water level. This setup controls the time interval between the controller comparing the current water level and the required water level points. N.B. If configured as OFF no derivative action is performed. Only applies when modulating control type is configured. See Also: Derivative Deadband, Derivative Response Sensitivity.
5.2	10%	1% - 50%	**Derivative Deadband**: This setup is used to configure the margin above and below the required level within which there is no derivative action. N.B. Only applies when modulating control type is configured. See Also: Derivative Time, Derivative Response Sensitivity.
5.3	10%	1% - 100%	**Derivative Response Sensitivity**: This setup indicates the percentage of feedwater increase or decrease that is inflicted by the derivative action. N.B. Only applies when modulating control type is configured. See Also: Derivative Time, Derivative Deadband.
6.1	152	50 - 4050	**Potentiometer Close Position:** Servo potentiometer feedback at close position. N.B. This is only required when configured for use with a motorized valve. See Also Potentiometer Open Position
6.2	2432	50 - 4050	**Potentiometer Open Position:** Servo potentiometer feedback at open position. N.B. This is only required when configured for use with a motorized valve. See Also Potentiometer Close Position **Sudden Pressure Drop:** If enabled, setup 7 temporarily raises the water level control point in the event of a sudden boiler pressure drop. A change of pressure over time is tested for. If the pressure change is greater than the amount specified the water level control point is raised on a scaled basis according to the deviation of the boiler Required setpoint and Actual values. Once the boiler pressure is within a band of the required value the raised control point effect is cleared. This band is the same amount as set in 7.2. The function can be disabled altogether see 7.1.
7.1	3	0 – OFF 1 - 120	**Sudden Pressure Drop- Time Between Readings:** Period of seconds over which the change of pressure is tested. (OFF - sudden pressure drop

Setup No.	Factory Setting	Setup Value	Description
7.2	15	1 – 100	**Sudden Pressure Drop- Change in Pressure (and clear band):** Amount of pressure drop over time (specified in 7.1) that must occur for raised control point to be triggered.
7.3	0		**Sudden Pressure Drop- Percent Increase Scale:** Water level control point percent increase scale. Percentage of distance between control point and High water
		0	0%
		1	25%
		2	50%
		3	75%
7.4	10	5 – 100	**Sudden Pressure Drop- Pressure Scale:** Pressure scale - offset from Required value.
8.1	RUNS	RUNS STOPS	**Burner Operation at High Water:** Sets whether the boiler should continue to run or stop when a high water condition exists.
9.1	1.00%	0 – 2.00%	**Boiler Standing Losses:** Percentage of boiler Maximum Continuous Rating. N.B. For the purpose of steam flow metering only.
10.1	1.00%	0 – 10.0%	**Boiler Blow Down Losses:** Percentage of boiler Maximum Continuous Rating. N.B. For the purpose of steam flow metering only.
10.2	constant		**Boiler Blow Down Loss Calculation Method:**
		Constant	Fixed loss rate
		Proportioned	Loss rate proportioned to firing rate
11.1	30%	0 – 100%	**Pump Turn Off Point:** When the water level increases above the control point the pump can be set to turn off at the point selected by this setup. The point is the percentage distance between the working control point and high water. N.B. Only applies when modulating control type is configured.
12.1	Enabled	Enabled Disabled	**Auxiliary Alarm Inputs:** If enabled the auxiliary mains voltage terminals for 2nd LOW, 1st LOW & HIGH WATER are brought into effect. These operate in addition to the two capacitance probes.
20.1	10	0.1 – 999.9	**Deairator Make Up Water Flow Range:** Only relevant if Deairator feedwater method in use. Set value that represents flow at 20mA - Gallons per Minutes if Imperial Units, Litres per Second if Metric. (4mA represents zero flow)
20.2	10	0.1 - 999.9	**Deairator Return (Condensate) Water Flow Range:** Only relevant if Deairator feedwater method in use. Set value that represents flow at 20mA - Gallons per Minutes if Imperial Units, Litres per Second if Metric. (4mA represents zero flow)
21.1	80°F 26°C	32 – 212°F 0 – 100°C	**Default Feedwater Temperature:** Feedwater temperature value used if Feedwater Temperature sensor(s) not fitted. Displayed as F or C according to
22.1	0		**TB Output Terminal Function:**
		0	TDS Top Blowdown
		1	ON Above Switch Point (value set in 22.2)
		2	ON Below Switch Point (value set in 22.2)
		3	TDS Continuous Blowdown

Setup No.	Factory Setting	Setup Value	Description
22.2	20	1 – 80	**Switch Point:** (only relevant if 22.1 = 1 or 2)
22.3	10	1 – 50	**Switch Point Hysteresis:** (only relevant if 22.1 = 1 or 2) If 22.1 = 1 the TB output switches ON when the modulating value angle becomes greater than the switch point (22.2). The TB output switches OFF when the modulating value angle becomes less than the switch point minus the hysteresis amount (i.e. 22.2 minus 22.3). If 22.1 = 2 the TB output switches ON when the modulating value angle becomes less than the switch point (22.2). The TB output switches OFF when the modulating value angle becomes more than the switch point plus the hysteresis amount (i.e. 22.2 plus 22.3). In either case ensure the values entered are rational - IE in the case of a valve the ON/OFF points are between 1 to 89 degrees.
23.1	Disabled	Enabled Disabled	**Top Blowdown Management:** If enabled the Top Blow Down Management screen will be displayed when appropriate - see TDS section of this manual. Setup 22.1 must be set to 0 or 3 so the TB output terminal performs the Top Blow Down function, or TB and TB2 perform the TDS Continuous Blowdown.
24.1	Type 2		**Water Level PCB Type:**
		Type 1	First issue Water Level PCB
		Type 2	Second Issue Water Level PCB - includes Top Blow Down & Deairator facilities
		Type 3	Third Issue Water Level PCB - Rev 7027
25.1	300	30 – 600	**Test time to 1st low**
25.2	300	30 – 600	**Test time to 2nd low**
26.1	50%	0 – 100%	**Continuous Blowdown Proportional Band:** When using PID, the controller output is proportional to the error between the current TDS level and the required operating level. N.B. Only applies when TDS Continuous Blowdown is configured.
27.1	30	1 – 1000	**Continuous Blowdown Integral Time:** This setup is used to set a period of time n for integral action. At these intervals a percentage (See Continuous Blowdown Integral Factor) of the present offset from the TDS control point variable is added or subtracted to the present proportional value. N.B. If configured as OFF no integral action is performed. Only applies when TDS Continuous Blowdown is configured.
28.1	40%	10–100%	**Continuous Blowdown Integral Factor:** This setup is used to set the percentage of the present offset from the TDS control point variable to be added or subtracted from the present proportional value. N.B. Only applies when TDS Continuous Blowdown is configured. See Also: Continuous Blowdown Integral Time, Continuous Blowdown Proportional Band.

Setup No.	Factory Setting	Setup Value	Description
29.1	30	0 – OFF 1 - 1000	**Continuous Blowdown Derivative time:** With derivative action, the controller output is proportional to the rate of change of the TDS level. This setup controls the time interval between the controller comparing the current TDS level and the required TDS. N.B. If configured as OFF no derivative action is performed. Only applies when TDS Continuous Blowdown is configured. See Also: Continuous Blowdown Derivative Deadband, Continuous Blowdown Derivative Response Sensitivity.
30.1	0.40%	0.1-100.0%	**Continuous Blowdown Derivative Deadband:** This setup is used to configure the margin above and below the required TDS level within which there is no derivative action. N.B. Only applies when TDS Continuous Blowdown is configured.
31.1	10%	1 – 100%	**Continuous Blowdown Derivative Response Sensitivity:** This setup indicates the percentage of control valve response increase or decrease that is inflicted by the derivative action. N.B. Only applies when TDS Continuous Blowdown is configured.
32.1	200	50 - 4050	**Continuous Blowdown Potentiometer Close Position:** Servo potentiometer feedback at close position. N.B. This is only required when configured for use with a motorized valve. See Also Potentiometer Open Position
33.1	1200	50 - 4050	**Continuous Blowdown Potentiometer Open Position:** Servo potentiometer feedback at open position. N.B. This is only required when configured for use with a motorized valve. See Also Potentiometer Close Position
34.1	60 minutes	0 – 3600	**Time valve closed before Automatic Blowdown:** This determines how often the TDS valve opens to take a fresh sample. N.B. Only applies when TDS Continuous Blowdown is configured.
35.1	30%	0-100%	**Automatic Blowdown Valve Open:** When the TDS valve opens to take a fresh sample, this determines how much the valve opens. N.B. Only applies when TDS Continuous Blowdown is configured.

5.10.1.1 Water Level Parameters

N.B. The software is fixed to operate on 2 probes

To enter the water level parameters:
Set parameter 109 to. Go into commissioning mode and enter water level setups. After setup 12.1, the following extra setups will be available.

5.10.1.2 Resetting Water Level Setups and Parameters

To reset all the water level set-ups and water level parameters to their default settings, set setup 6.1 to 51 and 6.2 to 4049.

Setup No.	Factory Setting	Setup Value	Description
A.1	10	1 - 20 Seconds	**Probe filtering time.** Every second each probe takes 10 readings. This is then averaged over the value set in this parameter.
B.1	5	1 - 100 Seconds	**Control element update time.** This is how often the modulating feed water valve will be moved in response to variations in the water level.
C.1	0.02	0 = OFF 0.1% - 20%	**Control point deadline.** No further modulation will occur wihin 2.0% of the control point 0 = control point 100 = 1st low
D.1	5	1 - 20 Seconds	**PK PK sampling period.** Peak to peak sampling period (highest/lowest).
D.2	1	1 - 20 Seconds	**PK PK update time.**
E.1	1500	0 - 2000 Hz	**Min mismatch.** 1500Hz = 3" or 75mm Probe 1 is used as the reference based on the commissioning data. This probe assesses the value of probe 2 to establish if there is a mismatch present (outside 1500Hz). Mismatch is a serious prolem ans is safety critical. If a probe mismatch occurs the probes may need cleaning.
E.2	0	0 - 2000 Hz	**Max mismatch.**
E.3	1.5	1 - 10	**Mismatch multiplier**
E.4	30	1 - 200 Seconds	**Mismatch time.** If the mismatch exceeds 30 seconds then the system will shut down. If the value of probe 2 moves back inside the 1500 window then this timer is reset. **N.B. First low takes priority over mismatch.**
F.1	0.5	0 - 2.5	**Tubrbulence factor.** This value corresponds to the predicted water level.
G.1	0	0 - 100%	**Expansion offset.**
G.2	10	0 - 50 Seconds	**Expansion turb time.**
G.3	10	1 - 100	**Expansion turb amount.**
H.1	Averaged	Averaged Probe 1	**Control point method.** Averages the data between both probes. Works off the readings from probe 1 only (control probe). The checks between the 2 probes are still carried out.
J.1	1	0 1 - 100mm	**Detect turbulence level.** Disabled If the water is still the frequency will drop below 10Hz and a fault will occur. This is non-movement detection.
J.2	10	1 - 100 Seconds	**Detect turbulence time.** N.B. If J.1 is set to 0, then this function is disabled.

Setup No.	Factory Setting	Setup Value	Description
K.1	5	1 - 100	**Steam flow metering start pressure offset.** This is an offset of the required pressure. If within 5 PSI of the required pressure, the system is deemed to be producing steam so steam flow metering will commence.
K.2	5	1 - 100	**Steam flow metering stop pressure offset.** This is an offset of the required pressure. If the pressure is drops below 5 PSI of the required pressure, steam flow metering will stop.
L.1	1000	1 - 3000 Hz 0	**Max Probe Drift.** Disabled

5.10.2 Replacing the Servomotor / Actuator for a feedwater valve

READ ALL THOROUGHLY BEFORE COMMENCING WORK

1. Firstly, power to the system must be removed in order to make mechanical adjustments.

2. In order to ensure that the valve is fully closed the following pictures must be followed:

It is essential to check the feed water valve position and adjust this to the close position. This is done using the crank and checking the position of the valve stem out of the valve.

3. The coupling must then be attached to the feedwater valve and correctly aligned as in the picture, and the servo motor/actuator must be at exactly 90 degrees to the feedwater valve (flow through the valve). When the servo motor is supplied, it comes in the 0 degree position.

4. After these mechanical changes, the alignment may be correct. Check the display diagnostics as covered in parts 6 and 7.

5. The next procedure is to make electrical changes (please check that there is still no power to the system)
Remove the lid and the end covering as shown in the diagrams below. In the end section the wires labelled CW (clockwise wire) and CCW (counter clockwise wire) must be removed since if present they will make the valve search for the operating position. All other wires must be kept in place including the ones on top.

DANGER - LIVE VOLTAGE

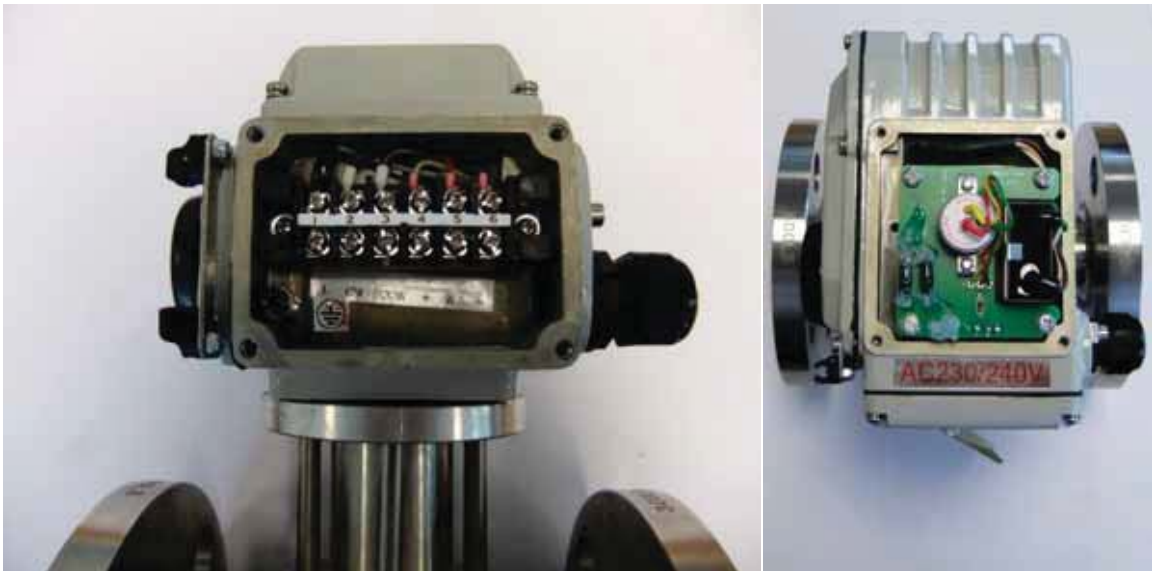

6. Be careful: in the next procedure there are live connections showing. Turn the power on to the system and enter the commissioning mode on the MM screen. In parameters, change parameter 83 to 1 (on) to display the diagnostics. Then enter this and re-enter commissioning mode and go into water level commissioning. The screen below is one of the diagnostic displays available.

7. It is now necessary to carefully rotate the potentiometer position, checking the MM screen and watching the value indicated below. The close position value is 152, so a value of 152-170 will correspond to the close position.

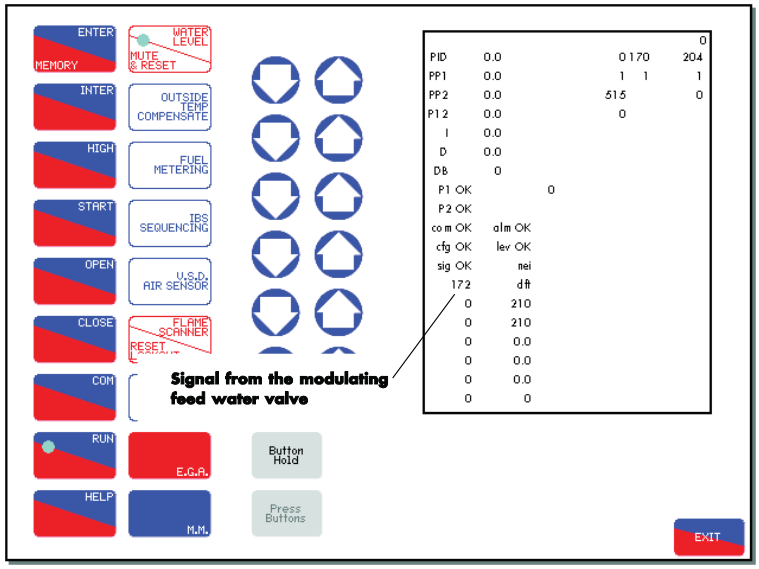

5.11 WATER LEVEL WIRING

5.11.1 Water Level PCB Wiring Schematic

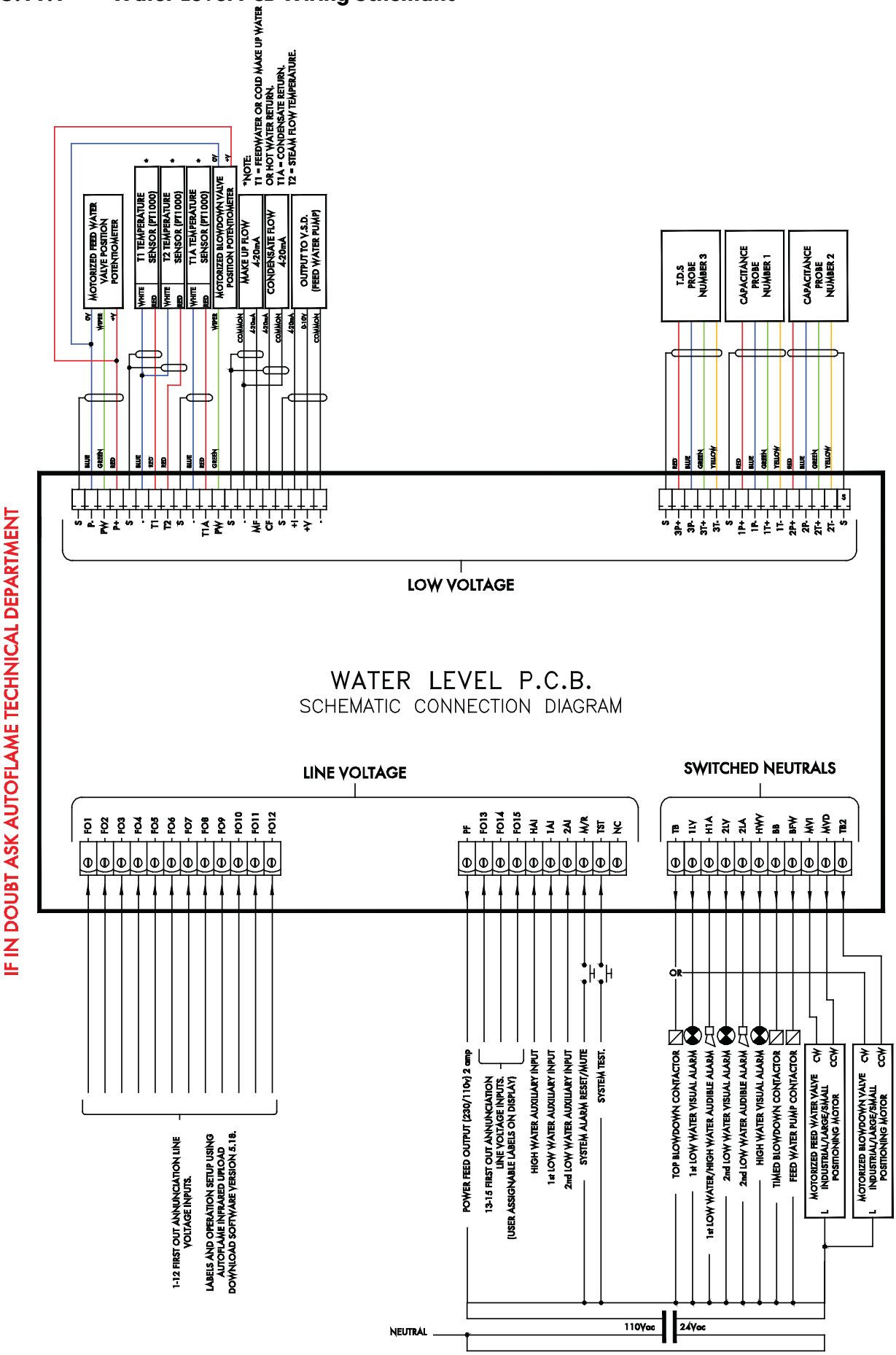

5.11.1.1 Terminals Description

P-	Feedwater control valve/Motorised Blowdown valve potentiometer excitation voltage –ve
PW	Feedwater control valve potentiometer wiper
P+	Output. Feedwater control valve/Motorised Blowdown valve potentiometer excitation voltage +ve Max load 5mA
T1	Feed water temperature sensor
T2	Steam temperature sensor
T1A	Condensate water temperature sensor
PW	Motorised blowdown valve potentiometer wiper
MF	4-20mA input - Make up Water Flow
CF	4-20mA input - Condensate Water Flow
+I +V	Outputs. Analogue signals to control VSD. Max output under normal operation 10V/20mA. (Current Input impedance max 250R)
3T- 3T+ 3P- 3P+	Connections solely dedicated to Autoflame TDS Probe
1T- 1T+ 1P- 1P+	Connections solely dedicated to Autoflame capacitance Probe 1
2T- 2T+ 2P- 2P+	Connections solely dedicated to Autoflame capacitance Probe 2
FO1 - FO15	First Out annunciation inputs (mains voltage input)
PF	Mains supply live/hot to alarm devices/motorized valve etc
HAI	High water Auxiliary Input (mains voltage input)
1AI	1st low water Auxiliary Input (mains voltage input)
2AI	2nd low water Auxiliary Input (mains voltage input)
M/R	Water Level Alarm mute/reset (mains voltage input)
TST	Test Facility Activate (mains voltage input)
NC	No Connection
TB	Top Blow Down OR Motorised Blowdown valve motor drive – increase (output switched neutral)
1LV	1st Low visual alarm (output switched neutral)
H1A	High and 1st low water audible alarm (output switched neutral)
2LV	2nd Low visual alarm (output switched neutral)
2LA	2nd Low audible alarm (output switched neutral)
HWV	High water visual alarm (output switched neutral)
BB	Bottom Blow Down (ouput switched neutral)
BFW	Feedwater pump on/off. (output switched neutral)
MVI	Feedwater control valve motor drive – increase (output switched neutral)
MVD	Feedwater control valve motor drive – decrease (output switched neutral)
TB2	Motorised Blowdown valve motor drive – decrease (output switched neutral)

Note that all the "-" & P- terminals on the top left connection strip are common to each other, All of the circuitry associated with this terminal strip (analogue inputs and outputs) is isolated from earth potential (i.e. floating). If a VSD is not used, or a VSD is used that has isolated input signal circuitry, link one of the "-" terminals to an S terminal (EG between P- and the adjacent S terminal to its left). If using a VSD and the VSD signal input circuitry is earthed do NOT install a link.

ALL TERMINALS MARKED "S" ARE CONNECTED TO MAINS EARTH TERMINAL 66 ON THE MK7 AND ARE ONLY FOR CONNECTION TO CABLE SCREENS.

5.11.2 Water Level Electrical Specification

Classifications

Outputs:	120/230 V	
MVD	1.5A	
MVI	1.5A	
BFW	250mA	Must be connected through contactor
BB	250mA	Must be connected through contactor
HWV	100mA	(alarm indicator)
2LA	100mA	(alarm indicator)
2LV	100mA	(alarm indicator)
H1A	100mA	(alarm indicator)
1LV	100mA	(alarm indicator)
TB	500mA	Must be connected through contactor when used with a solenoid valve
TB2	500mA	
PF	Maximum 2A	(load currents for above terminals)
Note	MVD MVI only one output switched at a time. Max number of alarm indicators on at any time is 3 (1LV, 2LA, 2LV) Use 4-core screened cable to connect capacitance probes.	

Main Voltage Signal Inputs

At 120V Current Loading Approximately 0.6mA
At 230V Current Loading Approximately 1.15mA

Refer to MK7 Electrical Specifications Section for other general ratings.

5.11.2.1 Fuse Position and Rating

The Autoflame WL PCB has one main fuse located next to the PF Terminal. It is a 2A (T) Fuse.

5.11.3 Capacitance Probe Connections

The new design of Water Level Capacitance Probe comes with a detachable flying lead.
The Flying Lead is supplied as standard but is shipped unattached.

This will allow installation of the Capacitance Probes into the Boiler or External Pot, without any external wires connected.

For removal of the probes disconnect the flying lead before unscrewing.

5.11.3.1 Photos of New Design

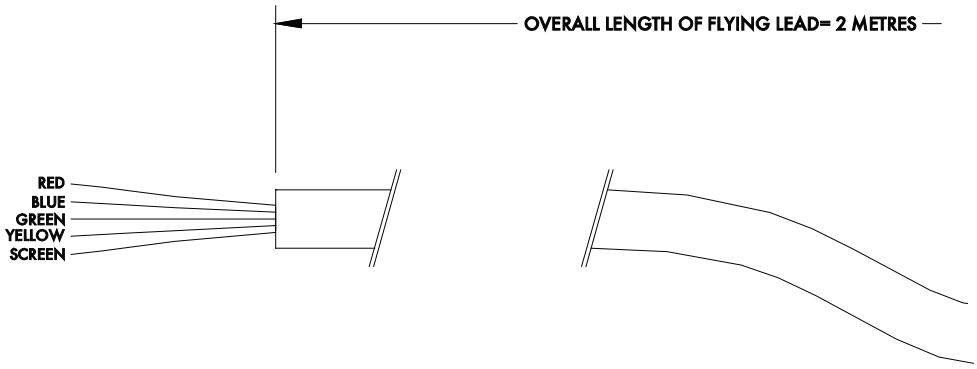

Probe No.1

Colour	Description	Terminal
Red	Power Supply +	1P+
Blue	Power Supply -	1P-
Green	Data Transmission +	1T+
Yellow	Data Transmission -	1T-

Probe No.2

Colour	Description	Terminal
Red	Power Supply +	2P+
Blue	Power Supply -	2P-
Green	Data Transmission +	2T+
Yellow	Data Transmission -	2T-

5.12 COMMISSIONING THE WATER LEVEL POSITIONS

(Note: Ch1, Ch2 etc refers to the rows of buttons with Ch1 at the top)

1. Either deselect and then select fuel or power down and restart.

2. If system is already commissioned, press Commission when the system starts up.

If the system is not already commissioned, commissioning mode will be entered automatically.

3. "ENTER PASSWORD" is displayed.
Use the calculator keypad to set the password codes.

Then press Continue to accept

4. The "Commission Mode" screen is then entered.
The MM will initially be disabled until commissioning data is entered or on reboot of a software upgrade.

5. To enable the MM press Disabled and choose 'Water Level Control Active'.

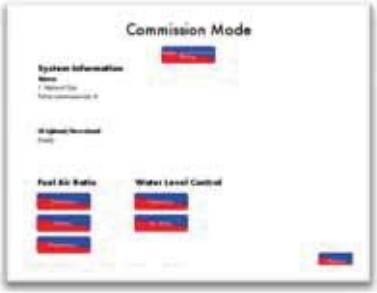

6. Press Water Level Control "Commission"

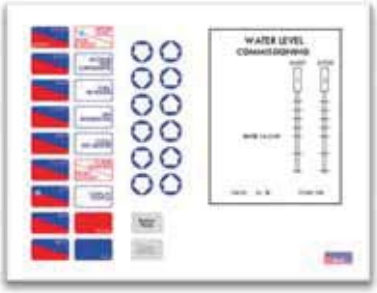

7. Use Ch2 to control the position of the feedwater valve (if optioned) and Ch1 to control the pump operation (OFF ON)

8. Current position to be commissioned is indicated by flashing message showing End of Probe.
Increase the water level until it approaches the bottom of the probe. As the water level exceeds the bottom of the probe, the displayed probe values will begin to change. Once the desired point has been found, close the feedwater valve and turn off the pump using the controls in step 7. After allowing a period for the values to stabilise, press WATER LEVEL MUTE & RESET then ENTER MEMORY to save.

9. The display will then show "Second Low" Flashing. Increase the water level using Ch1 and Ch2. Once the desired point has been found, close the feedwater valve and turn off the pump using the controls in step 7. After allowing a period for the values to stabilise, press WATER LEVEL MUTE & RESET then ENTER MEMORY to save the current water level.

10. Repeat step 9 for the remaining water levels. The number of levels to be entered is dependent on the configuration of Water Level Setup 1.1.

11. After entering the final position (High Water) the RUN L.E.D. will begin to flash. Before proceeding further reduce the water level to the control point level (or pump on). This will prevent the unit from registering a high water alarm immediately after the system has reset.

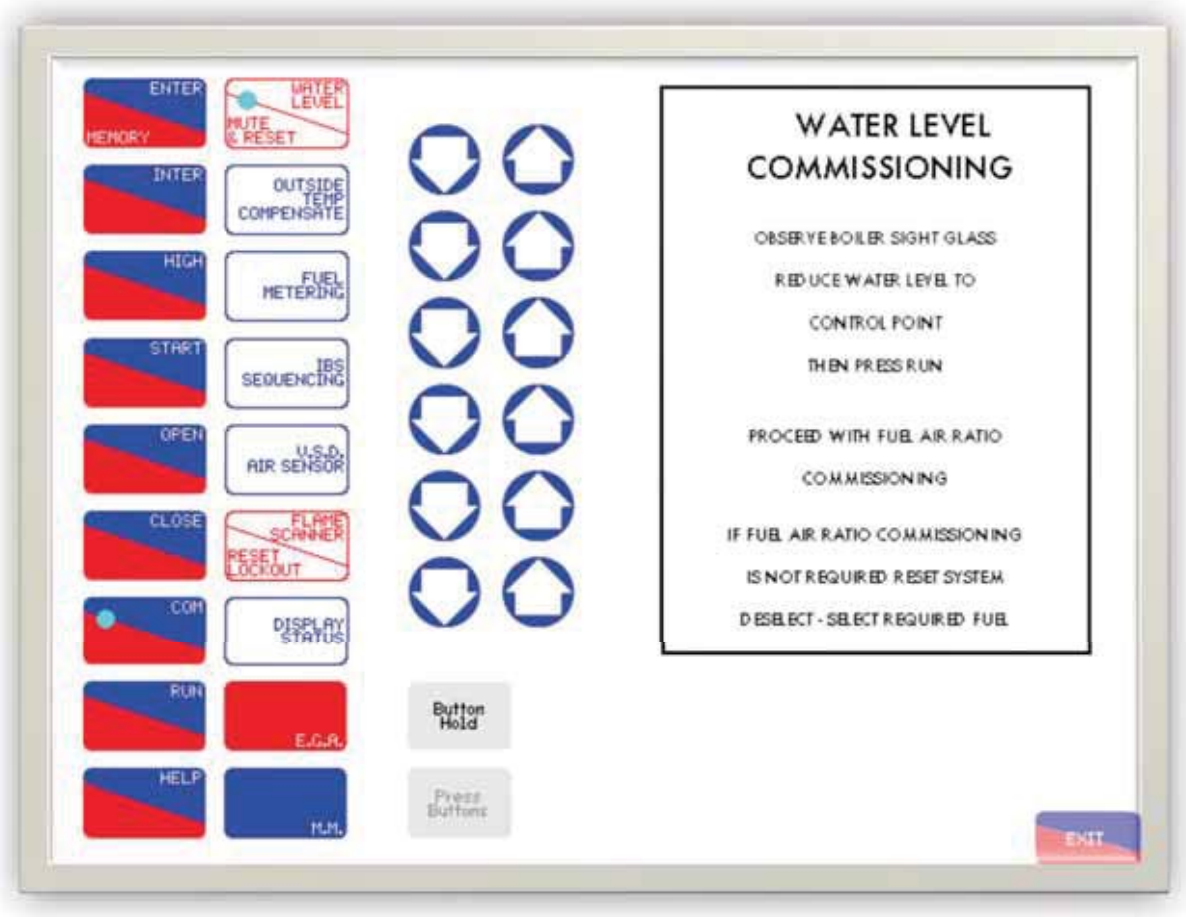

5.12.1.1 Commissioning Screens

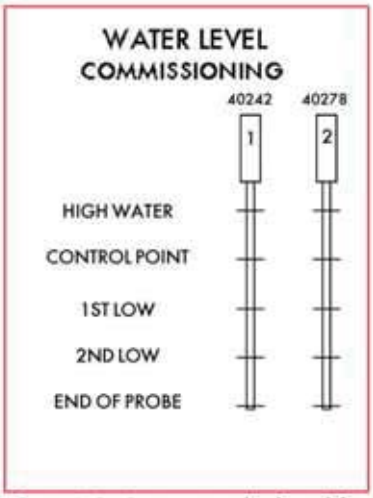

Commissioning screen displayed for standard modulating water control.

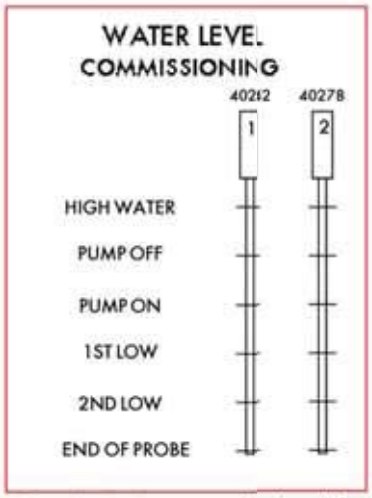

Commissioning screen displayed for on/off water control

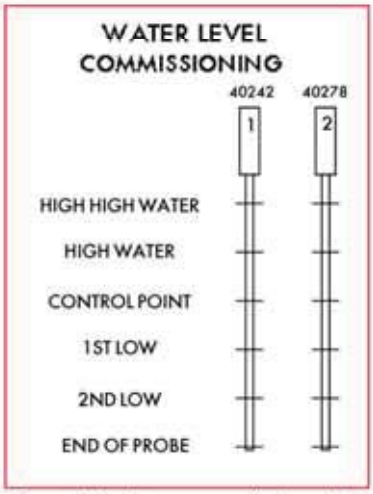

Commissioning screen displayed for modulating water control with High High water

5.12.2 Operational Checks

All local & national codes for safe operation of boiler plant must be respected. If in any doubt contact your local specialist authority.

Water level operation must be checked after commissioning or subsequent to modification of any setups.

Set the system to RUN mode and allow the burner to fire. With the boiler supplying steam at a steady rate check that the water level is maintained at the control point. Note: This is for modulating control. If the system is configured for on/off control check that the boiler feedwater pump turns on and off appropriately at the commissioned points. Ensure that all audible and visual alarm indicators are inactive.

Reduce the level of the water (by blow down or other suitable means). Check that a 1st low alarm occurs when the water level is just below the commissioned 1st low level. Note: The burner will stop in this condition.

Ensure that the 1st low audible and visual indicators are active.
If fitted, press the external mute/reset button and check that the audible alarm is muted.

Reduce the level of the water further and check that the 2nd low alarm is displayed when the water level is just below the commissioned 2nd low level. Note: The burner will remain stopped in this condition.

Ensure that the 2nd low audible and visual indicators are active.
If fitted, press the external mute/reset button and check that the audible alarm is muted.

All 1st Low/2nd low alarm conditions must be cleared before proceeding to test the high water.
To test high water it will be necessary to increase the water level to just above that of the commissioned high water position. If there is no means to manually increase the level of the water it is possible to select Water Level Commission mode and increase the level of the water manually. This can be performed by using the Ch1 and Ch2 controls. The unit can then be restarted by de-selecting and re-selecting the fuel. The unit will restart in RUN mode and should report a high water alarm.
Check the burner operation runs or stops according to the set up (8.1).

Ensure that the high water audible and visual indicators are active.
If fitted, press the external mute/reset button to check that the audible alarm is muted.

Check the operation of the TB output terminal if using a contactor with solenoid valve.

5.13 BOTTOM BLOWDOWN CONFIGURATION

Within the Mk7 water level control, a facility exists in which automatic bottom blowdown can be set. Up to 4 automatic bottom blowdowns can be set to occur within a 24 hour period. The following describes how to initiate this procedure.

Note: Local and national codes must be adhered to.

5.13.1 To Select Bottom Blowdown Configuration Mode

(Note: Ch1, Ch2, Ch3, Ch4, Ch5 and Ch6 refer to the rows of buttons respectively starting with Ch1 at the top)

Bottom blowdown values can be changed by entering the bottom blowdown configuration mode. The password must first be entered.

To enter the password follow the steps listed:

Either deselect and then select fuel, or power down and then up.

If system is already commissioned, press Commission when the system starts up.
If system is not already commissioned, commissioning mode will be set automatically.

"ENTER PASSWORD" is displayed.

Use the calculator keypad to set the password codes. Then press Continue to accept.

Then press Water Level Control "Commission" to enter Water Level Commission screen.

"ENTER END of PROBE" should be flashing

Using the "Button Hold" facility, press the Ch5 buttons simultaneously.

"BOTTOM BLOW DOWN CONFIGURE" is displayed at the top of the screen.

Pressing CH3 changes whether a blowdown is active or inactive at the selected number.

If a blowdown time is not active an X is displayed in the blowdown number. If a blowdown is enabled, the rest of the items show (blowdown time, duration and repeats). If you disable blowdown 2, then 3 & 4 will also be disabled.

Pressing CH1 moves up and down the Autoflame blowdown number column (1st column)

Pressing CH2 moves right and left on the screen to select the blowdown time, duration (0-60s) and repeats (0-10) at each number.

The item that can be changed flashes.

Using CH3 adjusts the values

Once the blowdown values have been configured, press ENTER (flashing).

In run mode the blowdown screen is displayed in Mk6 mode only. In Mk6 mode, press the WATER LEVEL button until the BOTTOM BLOW DOWN MANAGEMENT screen appears.

Basic Bottom Blowdown status information can also be view in the Mk7 mode, Water levels screen.

During **run,** if the time of a blowdown is reached, the word "IMMINENT" appears in the status box. When "IMMINENT" is displayed, checks are being carried out to see if another MM is blowing down. This may take up to 40 seconds if no other MM's with water level control are blowing down.
If another MM with water level control is blowing down it will take longer as the blowdown taking place will be allowed to finish before another one can start. Once established that the blowdown can take place the status box displays "OFF" when the blowdown output is off and "ACTIVE" when the blowdown output is on. During the blowdown OFF/ACTIVE sequence the message BLOWDOWN IN PROGRESS flashes up under the status box.

Please note that the blowdown information from the other MM's with water level control is via the RS485 connection on terminals #27/28 and is combined into the sequencing communication data. If there are two or more boilers and there is no RS485 connection on terminals #27/28 between the units or the ID settings are incorrect, a blowdown may occur on more than one boiler at the same time.

Notes:

If a boiler with the MM and water level control is alongside another boiler without an MM system or an older MMM without the water level control then consideration must be given to the overall blowdown arrangements.

Local and national codes must be adhered to. If regulations do not allow the use of automatic bottom blowdown then this feature must remain disabled in order to comply with code.

5.14 SHUNT SWITCH PHILOSOPHY

The operation of the shunt switch philosophy follows the following procedure:

NOTE: This can only be accessed in Mk6 Mode.

1. While the burner is either firing or in the standby state, press the 'Water Level' and 'Enter Memory' buttons simultaneously.

2. The Mk.6 screen would show "Implement level Control Test Procedure".

3. The operator would have to either confirm that he wanted to proceed by pressing 'Water Level' and 'Enter Memory' simultaneously or press 'Run' to exit.

4. If the operator proceeded to press the 'Water Level' and 'Enter Memory' button, the Mk.6 screen would then display 'Feed Water Valve Shut' and close the feed water valve.

5. The burner would continue to operate. At this time the operator would either let the water evaporate automatically or physically blow down the water column or boiler. A user-definable amount of time (time A) is set in the water level set-ups, during which time the 1st Low must be reached. If not, the burner will revert back to the run condition.

6. The 1st Low Alarm would be initiated and the alarm would sound. The operator has the option of muting the alarm. The burner continues to operate.

7. The operator would continue to decrease the water level in the column or boiler or allow the water to continue evaporating. A user-definable amount of time (time B) is set in the water level set-ups, during which time the 2nd Low must be reached. If not, the burner will turn off.

8. The 2nd Low Alarm would be initiated and the alarm would sound. The operator again has the option of muting the alarm. The burner continues to operate.

9. 3 seconds after the 2nd Low Alarm has been initiated the Mk.6 screen would display 'Feed Water Valve Open'. The water level would start to increase.

10. The Mk.6 would expect to see the water level rise above the 2nd Low Level within 30 seconds (default value) or time B of the valve opening. Should the level not increase a 2nd Low Alarm will be initiated, causing the burner to turn off and a lockout to occur, requiring a manual reset to recycle the system.

11. Once the water level increased above the 2nd Low Level the Mk.6 would allow a further 30 seconds (default value) or time A for the water level to rise above the 1st Low Level. Again should the level not increase a 1st Low Alarm will be initiated, causing the burner to turn off and an alarm to sound. The system would automatically recycle the system once the water level is above the 1st Low Level.

12. Once the level returns to above the 1st Low Level the screen would display 'Test Complete, Normal Operating Level Restored'

5.15 NORMAL OPERATION

5.15.1 End User Day to Day Operation

The WLC product is designed to report and control levels of water within industrial steam boilers.
The key features of the system are as follows:

- Reporting Level Alarms
- Feedwater Control
- Steam Flow Metering

Alarm level reporting deals with the ability to determine whether the current water level is above or below a predetermined level. These levels vary with each installation and must therefore be programmed on site by a qualified commissioning engineer. For each installation there are a minimum of five level indication points representing the following levels:

- High High Water
- High Water
- High Water Pre-alarm
- Control Point
- 1st Low Pre-alarm
- 1st Low
- 2nd Low
- Bottom of probe

(Note: the above arrangement is for water level modulation control. In the event of on/off level control there are six level indication points (pump on & pump off replace control point. These are the only two types of level control).

5.15.2 Water Level Operation

It is ideal to maintain an amount of water in the boiler appropriate to the amount of steam being generated. Should the water level drop below this ideal level by an excessive amount, it is necessary to stop the burner firing. If there is insufficient water in the boiler damage may occur to its structure.

In extreme cases there is the potential for the boiler to explode. The WLC herein is designed to maintain a satisfactory level of water in the boiler, whilst controlling and reporting low water level conditions. Its operation is as follows:

The water levels detailed above are described below:

High Water:
A high water level, although not dangerous is undesirable as water may infiltrate the steam header. If the boiler water level goes above this point the burner may or may not continue to run depending on the system configuration. If a high water level condition is detected high water audible and visual indicators are activated to notify the user. The audible indicator may be muted by means of the mute/reset push button.

Control Point:
Ideal water level regulation point. There are no audible or visual indicators active.

1st Low:
A 1st low water level is a point below the control point at which the burner will turn off. If the water level falls below this point 1st low audible and visual indicators are activated. The audible indicator may be muted by means of the mute/reset push button. If the water level is restored above this point the burner will start automatically and all indicators will be reset.

2nd Low:
A 2nd low water level is a point below 1st Low at which the burner will remain off. If the water level falls below this point 2nd low audible and visual indicators are activated. The audible indicator may be muted by means of the mute/reset push button. Even if the water level is restored above this point the burner will remain off. Operator intervention is required to manually reset the system and can only be performed once the level is above the 2nd Low point. The 2nd low reset condition is non-volatile - if the system is powered down the reset condition will remain when power is reapplied. In this scenario the operator reset will still be necessary.

Bottom of probe:
The bottom of probe level is used to identify the point below which the probe cannot obtain a valid water level. It has no operational use.

5.15.3 Water Level Display

Several different displays are available to provide the operator with information when using the Water Level Control.

As well as the following screens, additional screens are available in Mk6 mode. These are accessed by pressing the 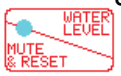

button when in Mk6 mode.

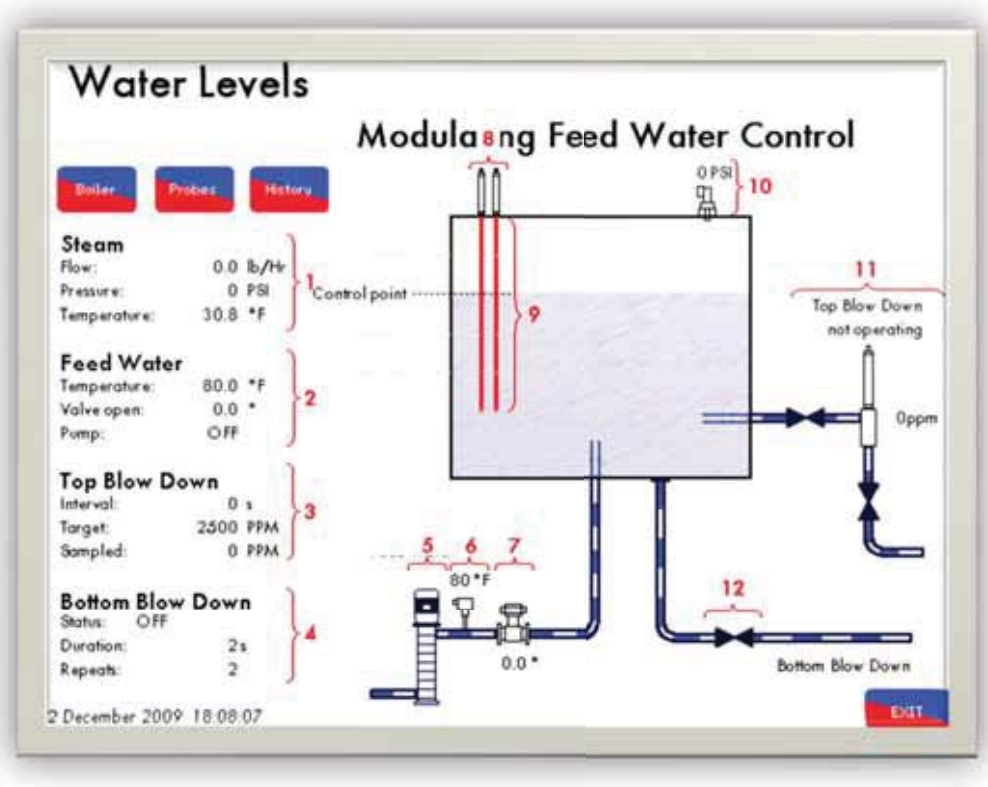

Water Level Home Screen

Pressing the Water Level button will display the screen above. All the Water Level information can be viewed here. The information is separated as follows:

1. Steam Information: the current rate of flow of steam, current pressure of steam and the temperature of the steam.
2. Feed Water information: temperature of the feed water, current angular degrees of the feedwater valve and pump status (on/off).
3. Top Blow Down information: Interval between samples, target solute concentration and sampled solute concentration.
4. Bottom Blow Down information: current status (on/off), duration of each bottom blow down an number of repeats.
5. Feed Water pump.
6. Feed Water temperature sensor and currently sampled temperature.
7. Feed Water valve and current angular position.
8. Capacitance Probes.
9. Current Operating point (Level of water measured)
10. Current steam pressure.
11. Current Top Blow Down status and currently sampled solute density.
12. Bottom Blow Down valve (on/off).

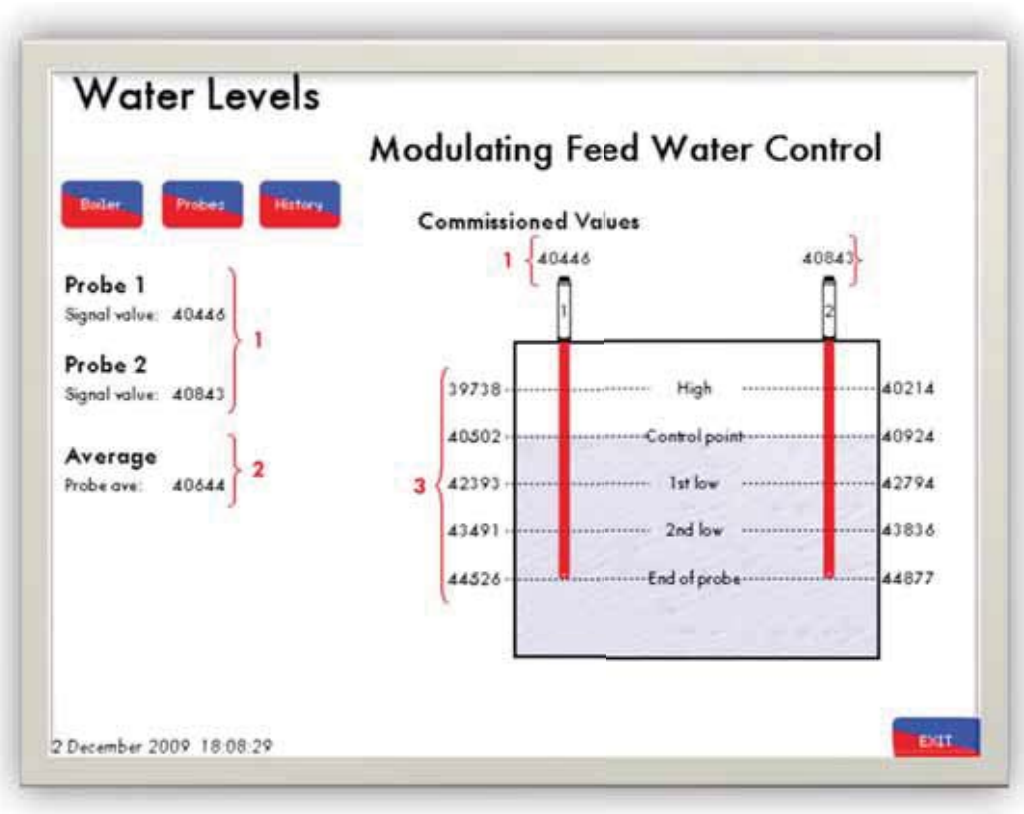

Water Levels Capacitance Probe Screen.

Pressing this button will display the detailed probe information as seen in the Figure above. This screen can also be accessed by pressing on the probes on the Home Screen. The information is arranged as follows:

1. Current capacitance values for probes 1 & 2.
2. The average of the two probe values.
3. Commissioned capacitance values for each control point.

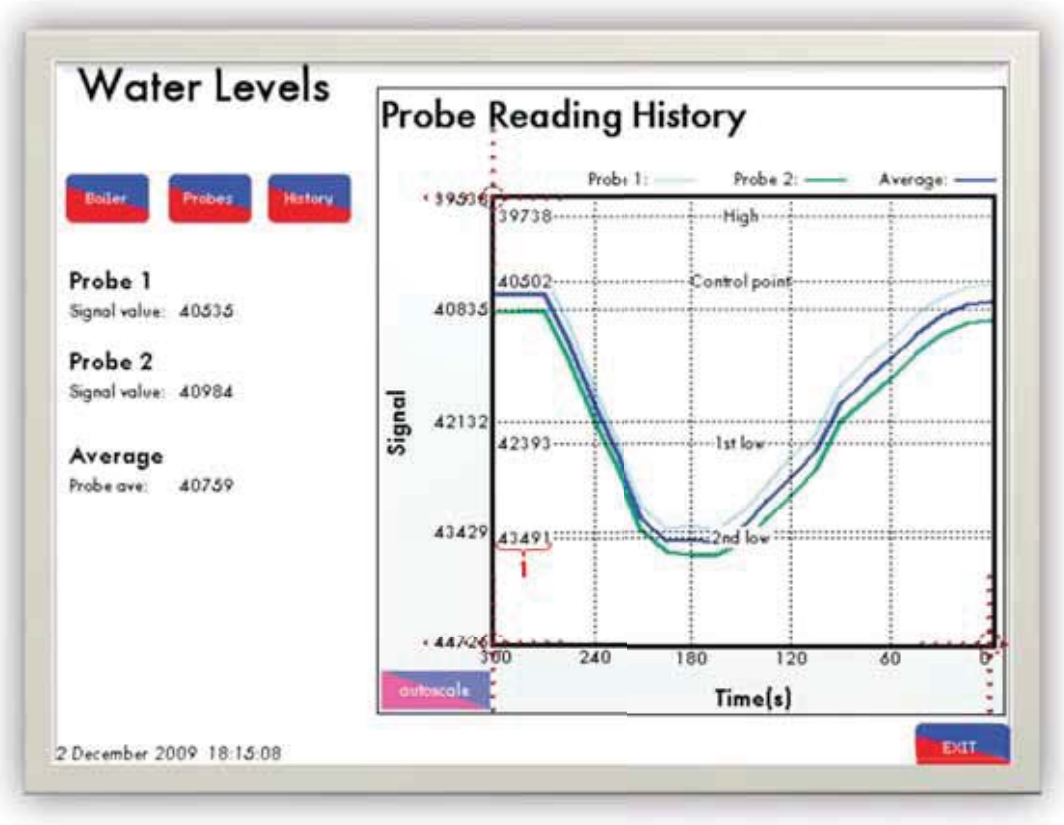

Water Level Probe History

Pressing this button will display a history of the capacitance values read over the past 24 hours as seen in the Figure above.

1. Commissioned values for each control point.

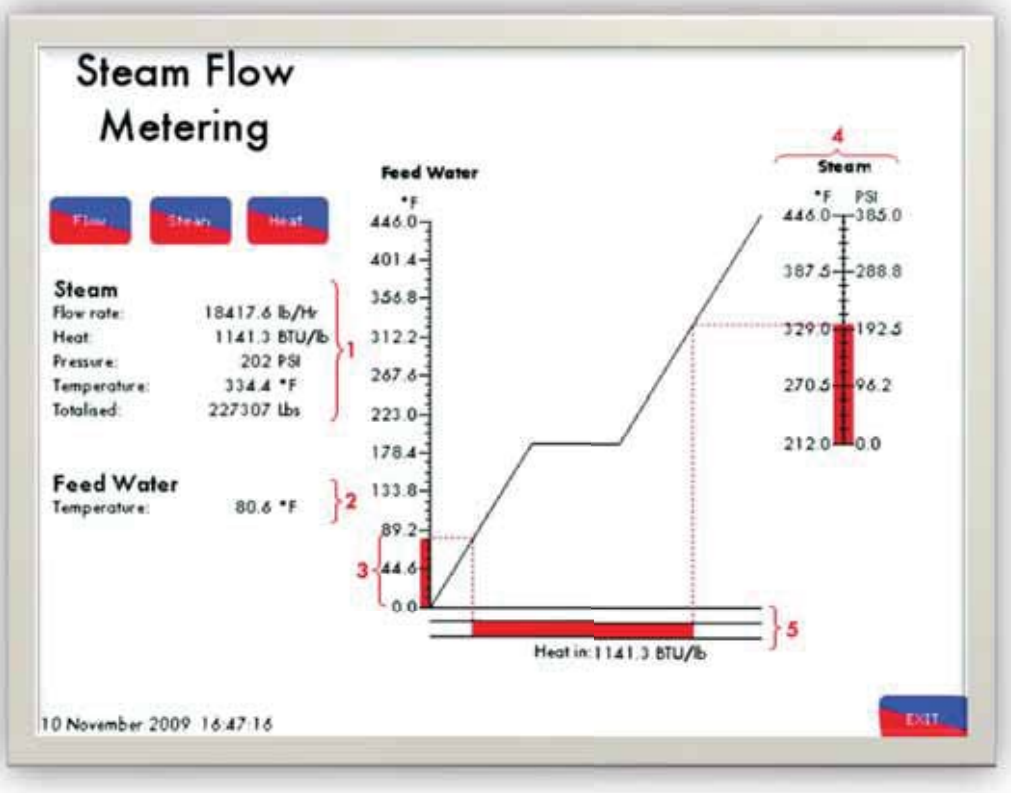

Steam Flow Metering Screen

The Steam Flow Metering screen displays the flow characteristics of both the feed water entering the boiler and the steam exiting the boiler. This screen can be entered by pressing the water pressure or temperature sensors on the Home Screen. The information is set out as below:

1. The rate of output of steam, heat input to produce said steam and the temperature of the steam.
2. The current feed water temperature.
3. Current feed water temperature.
4. Current steam temperature and pressure.
5. Amount of heat inputted to raise 1 lb of water at temperature 3 to the steam temperature and pressure 4.

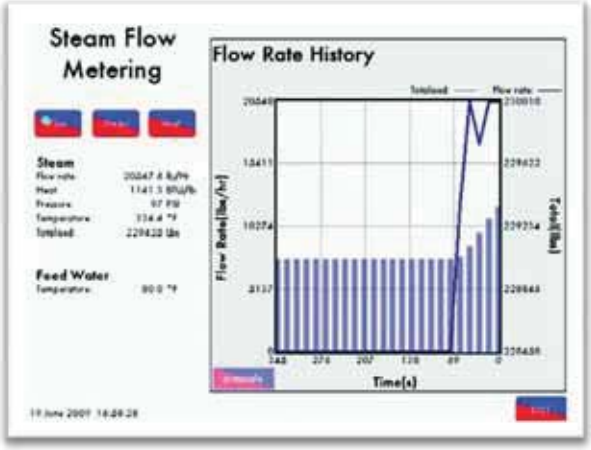

Pressing this button will show the flow rate history graph (Figure opposite). The graph displays the current rate of flow of steam out of the boiler and the totalised flow rate. This totalised flow rate is the cumulative total and not an average total.

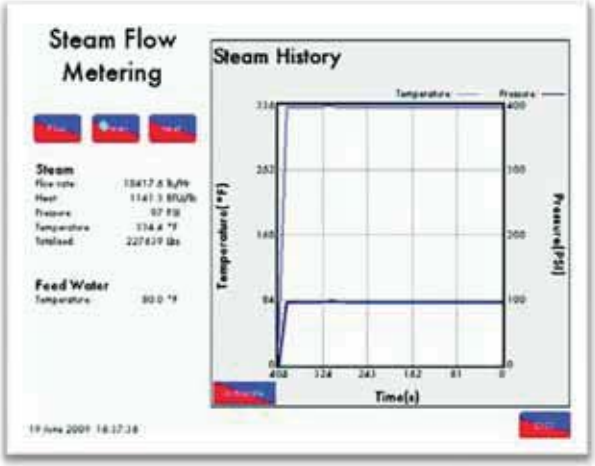

Pressing this button displays the steam history graph. This graph displays the temperature and pressure of the steam inside the boiler over a 24 hour period.

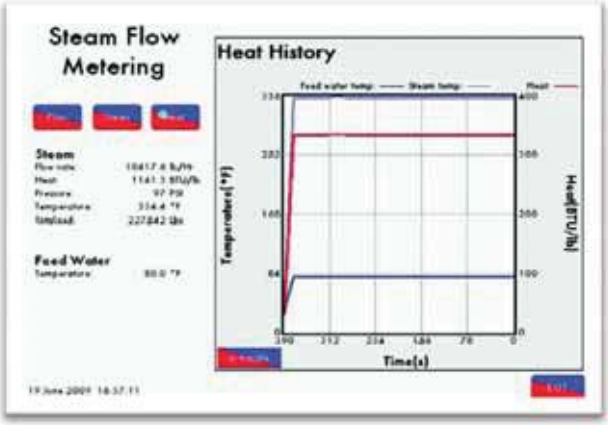

Pressing this button displays the temperature history of both the feed water and steam. It will also display the current heat input.

5.15.4 Key to Alarms

2nd Low Level:	The water level has fallen below the commissioned 2nd low position. If the alarm was preceded by a 1st Low alarm, the 1st low entry will be automatically replaced within the alarm log.
1st Low Level:	The water level is currently below the commissioned first low position. If the alarm precedes a 2nd Low alarm, it will be automatically replaced by a 2nd Low alarm in the log. If the water returns to a level above the commissioned 1st Low level the entry will remain within the log but will be automatically reset.
High Water Level:	The water level is currently above the commissioned high water position. This alarm will clear automatically when the water level is reduced below the commissioned High Water level.
Probe1/Probe2 Communications Failure:	The communications between the water level control and this probe have failed, exceeding the maximum allowed period of 3 seconds. Check Probe Wiring / Failed Probe.
Probe1/Probe2 Short Circuit Failure:	This probe's water level is currently outside of the normal operating limits range. This may be caused by a probe hardware failure. Contact your supplier for further details.
Probe Mismatch:	The probe levels are not currently in line with commissioned levels suggesting a probe failure or alteration. This can also be caused by overheating of the electronics. It is important to lag the flanges if the probes are mounted directly into the boiler shell.
Probe1/Probe2 Temperature Compensation (TC) Failure:	This probe's water level is currently outside of normal operating conditions when compensating the water level. Contact your supplier for further details.
Probe1/Probe2 Incorrect Commissioning Data:	The commission data for this probe is corrupted/not valid. Contact your supplier for further details.
Probe1/Probe2 still water:	The signal from this probe appears static indicating that the probe is not in water.
Probes Diverse:	One probe is reading above high water, the other below 1st low water. Usually caused by auxiliary inputs incorrectly connected/optioned.
Configuration Range Check Failed:	One or more of the configuration options is outside of the allowed range. Contact your supplier for further details.
Permanent Reset Input:	The water level control or MM mute/reset button was pressed for longer than 10 seconds. To reset this alarm ensure that both buttons are not pressed for at least 10 seconds. This will then become a keystuck-reset alarm.

Keystuck Reset:	This alarm will occur after a permanent reset input fault.
Permanent Test Input:	The water level control test input button was pressed for longer than 60 seconds.
Incompatible Configuration:	The configuration and commission data do not have matching control type options. This would occur if the configuration has been changed after commissioning.
Power Up EEPROM Failure:	The water level control has not been used before, or has a faulty EEPROM. If the problem persists contact your supplier for further information.
Power Up- Incorrect state saved in EEPROM:	The water level control has a corrupted EEPROM. If the problem persists contact your supplier for further information.

5.16 DIAGNOSTICS SCREENS

Full set of commissioned data:
First line: Actual commissioned value (Hz)
Second line: Nominal reference value (Hz)
Third line: Difference between this commissioned value and one below AND Temperature (C) of sensor on PCB at commissioning

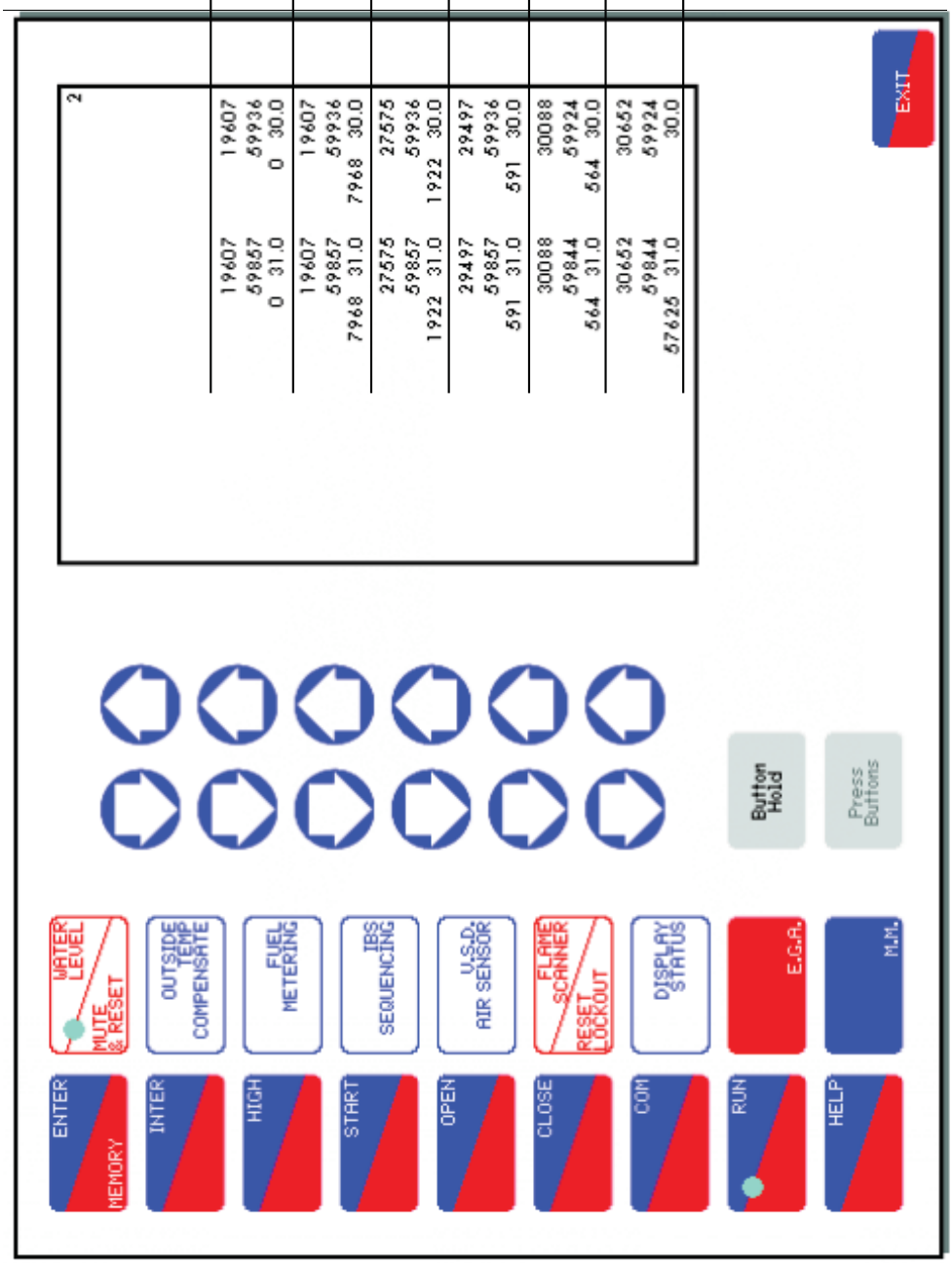

2 examples below:

1- Modulating water system	**2- Pump on/off system**
REPEAT OF HIGHWATER LEVEL	HIGHWATER LEVEL
HIGHWATER LEVEL	PUMP ON
CONTROL POINT	PUMP OFF
1ST LOW LEVEL	1ST LOW LEVEL
2ND LOW LEVEL	2ND LOW LEVEL
END OF PROBE LEVEL	END OF PROBE LEVEL

If using pre-levels or High High control, these points will also be shown

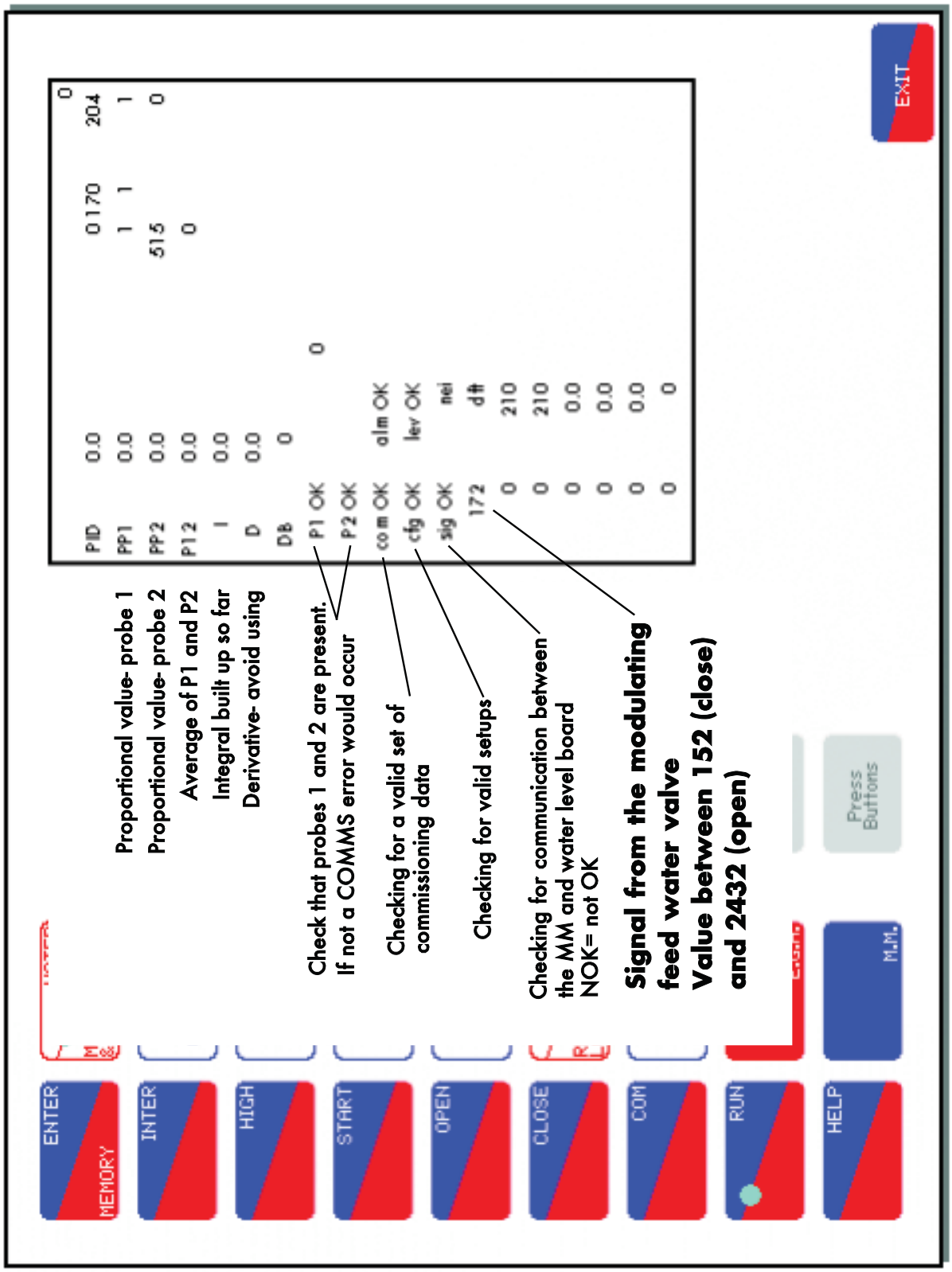
PID 0.0 0 170 204
PP1 0.0 1 1 1
PP2 0.0 515 0
P12 0.0 0
I 0.0
D 0.0
DB 0
P1 OK 0
P2 OK
com OK alm OK
cfg OK lev OK
sig OK nei
172 dH
0 210
0 210
0 0.0
0 0.0
0 0.0
0 0
Proportional value- probe 1
Proportional value- probe 2
Average of P1 and P2
Integral built up so far
Derivative- avoid using
Check that probes 1 and 2 are present.
If not a COMMS error would occur
Checking for a valid set of
commissioning data
Checking for valid setups
Checking for communication between
the MM and water level board
NOK= not OK
Signal from the modulating
feed water valve
Value between 152 (close)
and 2432 (open)
ENTER
MEMORY
INTER
HIGH
START
OPEN
CLOSE
COM
RUN
HELP
M.M.
Press
Buttons
EXIT

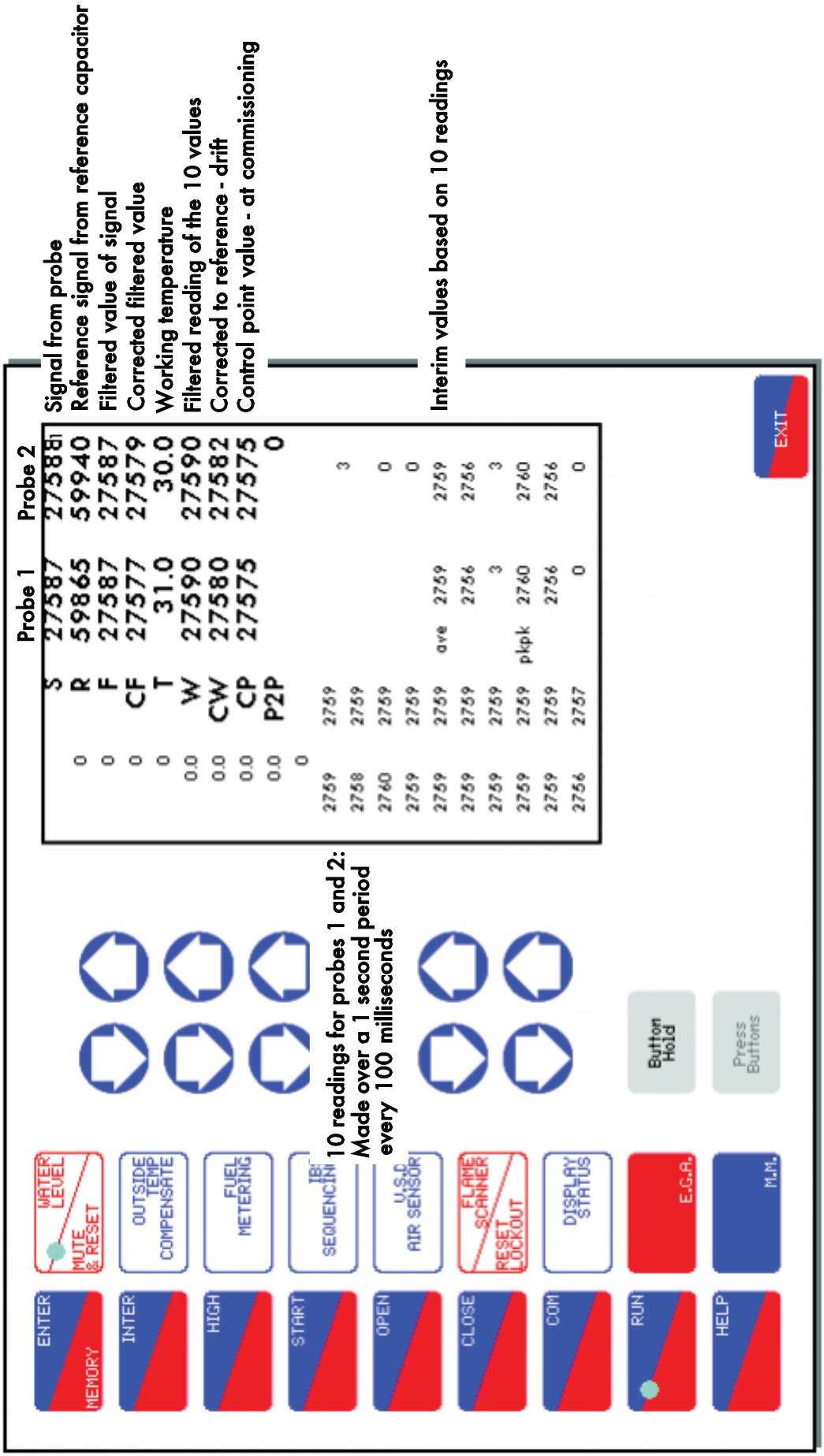
Probe 1
Probe 2
S 27587 27588
R 59865 59940
F 27587 27587
CF 27577 27579
T 31.0 30.0
W 27590 27590
CW 27580 27582
CP 27575 27575
P2P 0
ave 2759 2759
pkpk 2760 2760
Signal from probe
Reference signal from reference capacitor
Filtered value of signal
Corrected filtered value
Working temperature
Filtered reading of the 10 values
Corrected to reference - drift
Control point value - at commissioning
Interim values based on 10 readings
10 readings for probes 1 and 2:
Made over a 1 second period
every 100 milliseconds
ENTER
MEMORY
WATER LEVEL
MUTE & RESET
INTER
OUTSIDE TEMP COMPENSATE
HIGH
FUEL METERING
START
OPEN
U.S.D. AIR SENSOR
CLOSE
FLAME SCANNER
RESET LOCKOUT
COM
DISPLAY STATUS
RUN
E.G.A.
HELP
M.M.
Button Hold
Press Buttons
EXIT

5.17 TDS (TOTAL DISSOLVED SOLIDS) MANAGEMENT

5.17.1 The Philosophy of the TDS control system

To manage a steam boiler for optimum efficiency and reliability an important requirement is to ensure that the Total Dissolved Solids (TDS) in the water are measured and controlled to not exceed a nominated level. It is generally accepted that for water tube boilers the level of TDS measured should not exceed 1,500 PPM by volume and for smoke tube boilers the TDS should not be higher than 2,500 PPM by volume. The figures stated are not definitive and in all applications the recommendations of the boiler manufacturer or water treatment chemist should be implemented.

1) It has been established that the conductivity of water is proportional to the measured TDS as long as the temperature remains constant. Any variations in temperature will affect the measured conductivity by nominally 2% per 1°C. It follows that the temperature of the water must be measured and the conductivity reading must be adjusted before a TDS reading can be extrapolated from this line of data.

The Autoflame system incorporates a temperature measurement sensor in the steam drum to establish the steam temperature. This data stream is used to constantly correct the conductivity value.

2) A second variable that effects the conductivity measurement is polarization of the water sample. This occurs when electrical energy from the probe builds up a relatively tiny offset above or below the earth (0 volt value). This polarization value is typically noticeable when a continuous frequency is being emitted from the probe as part of the conductivity measurement method.

The Autoflame system deals with the potential problem of polarization in the following manner. The probe measures any build up of voltage potential above or below earth or 0V in the water sample. The measured polarization voltage data is used to modify the conductivity calculation. The Autoflame system emits electrical energy at a rate of 10x 300 microsecond pulses every second. This translates into a method where we are emitting electrical energy for 0.6% of the sample time. All other manufacturers who use the frequency method are emitting electrical energy for 100% of the sample time. It follows that the polarization problem in these cases would be 167 times greater!

3) A third problem that affects the accuracy of the TDS measurement is the build up of scale on the probe electrode. By design the water sampling container has been arranged so that the turbulence created during the blow down sequence will ensure that the probe remains effectively free of scale or deposited solids that could be held in suspension.

4) The sampling container has a known orifice size. From this it is possible to calculate the percentage losses due to surface blowdown. This is possible because the following parameters are known – hole size, temperature, pressure, pressure drop across the solenoid and the time that the solenoid is open for.

It can be seen from the above that the Autoflame TDS system deals succinctly with three of the main problem areas that are encountered when designing an accurate TDS control solution.

5.17.2 TDS Probe Calibration

The calibration of the Autoflame TDS control system should be carried out as detailed below.

1. The TDS must be operating in order to calibrate the TDS value.

2. Ensure that TDS has been optioned in the Boiler Configuration Screens so that TDS can be viewed.

3. If Step 2 has been completed correctly, there should be a TDS button on the system configuration screen. Press this button.

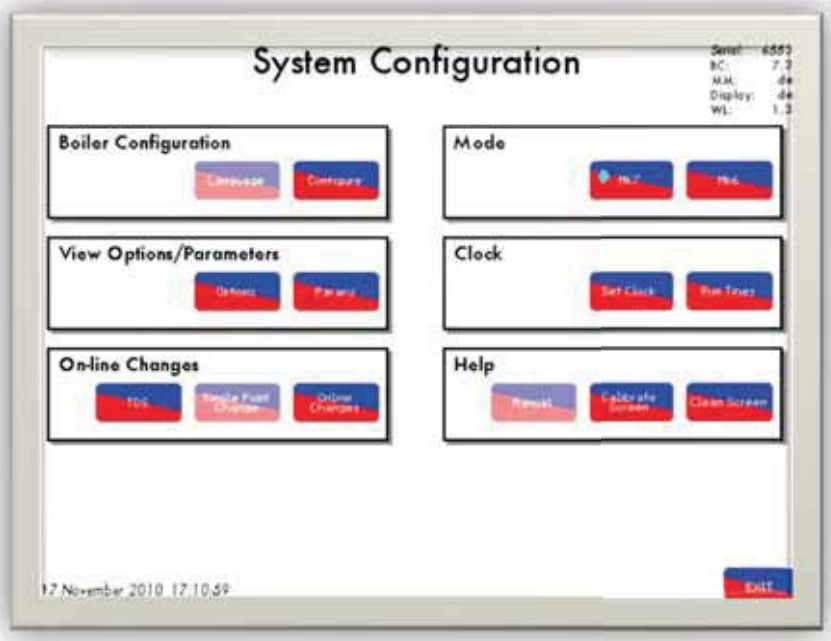

4. On the TDS Management Screen, press the "Probe Calibration" button

5. Please take a sample of boiler water and cool it to 25°C / 77°F.

6. The cooled sample must be analyzed for TDS content (PPM by volume). A hand held portable instrument typically as manufactured by "Hanna Instruments" can be used for this purpose (type HI98312). It is a vital part of this process that the hand held instrument is correctly calibrated in the manufactures recommended calibration solution. A water treatment chemist can carry out this task if required.

7. Press "Change" and using the displayed keypad; please enter the new TDS value. The probe will calibrate, and once complete, please press "Finished", then "Exit."

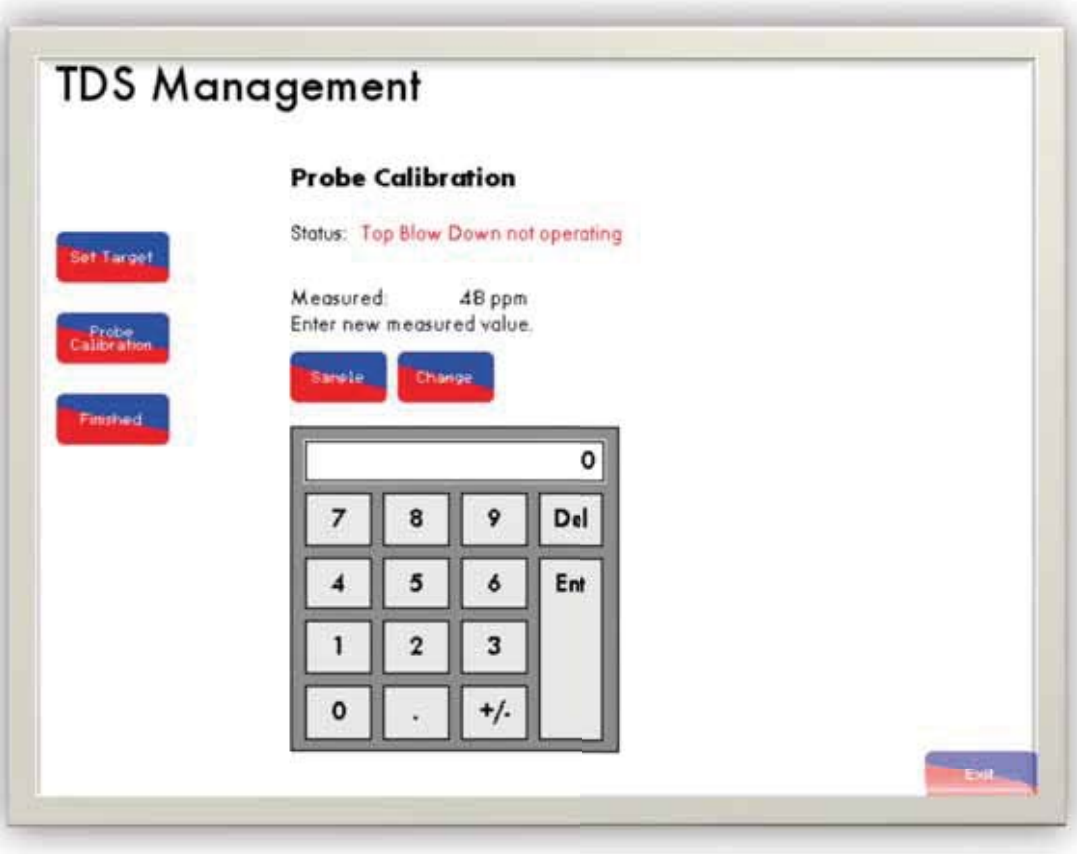

5.17.3 Control & Management of Total Dissolved Solids in a steam boiler.

5.17.3.1 Top Blowdown (Old Method - Using the Solenoid Valve)

The sampling and control sequence is as detailed below.

1. If the boiler water sample is above the required TDS value the system will open the top blowdown control valve for 5-300 seconds. This time duration is user variable and is designated BDT (Blowdown Time).

2. After blow down the system invokes a 5 second settlement interval.

3. After the settlement period a 5 second measurement routine is carried out to establish the current TDS level, (see page 5.12.6.1, figure 1) schematic for measurement and sampling sequence.

4. If the boiler water sample is still above the required TDS value the system will repeat the top 'Blowdown Time' routine as detailed above in 1) BDT.

5. When the boiler water sample is measured as below the required TDS level, the system will then take a sample every 60-300 seconds. (STI) This 'sample time interval' is user variable.

6. The 'duration of the sample time' is 3-10 seconds. (DST) This is user variable.

7. When the boiler water sample is measured as above the required TDS level item 1. is repeated.

5.17.3.2 TDS Continuous Blowdown (Motorized TDS Control using Autoflame Servo)

The sampling and control sequence is as detailed below.

1. If the boiler water sample starts to move above the target TDS value, the system will slowly open the continuous blowdown control valve. The length of blowdown is not a set time. The continuous blowdown will use Autoflame PID Control to reduce the TDS Level.

2. As the actual TDS level increases past the target value, the control valve % open will also increase.

3. When the actual TDS level starts to decrease and move towards the target valve, the system will utilise the proportional control to reduce the % open of the control valve.

4. Integral action will also be utilised to increase the valve % open to force the TDS value to reduce quicker.

5.17.3.3 Installation of the T.D.S. probe assembly

Illustrated below are two installation methods for the TDS probe incorporating Autoflame's sampling system.

All dotted components supplied by the customer

Option 1: Vertically mounted

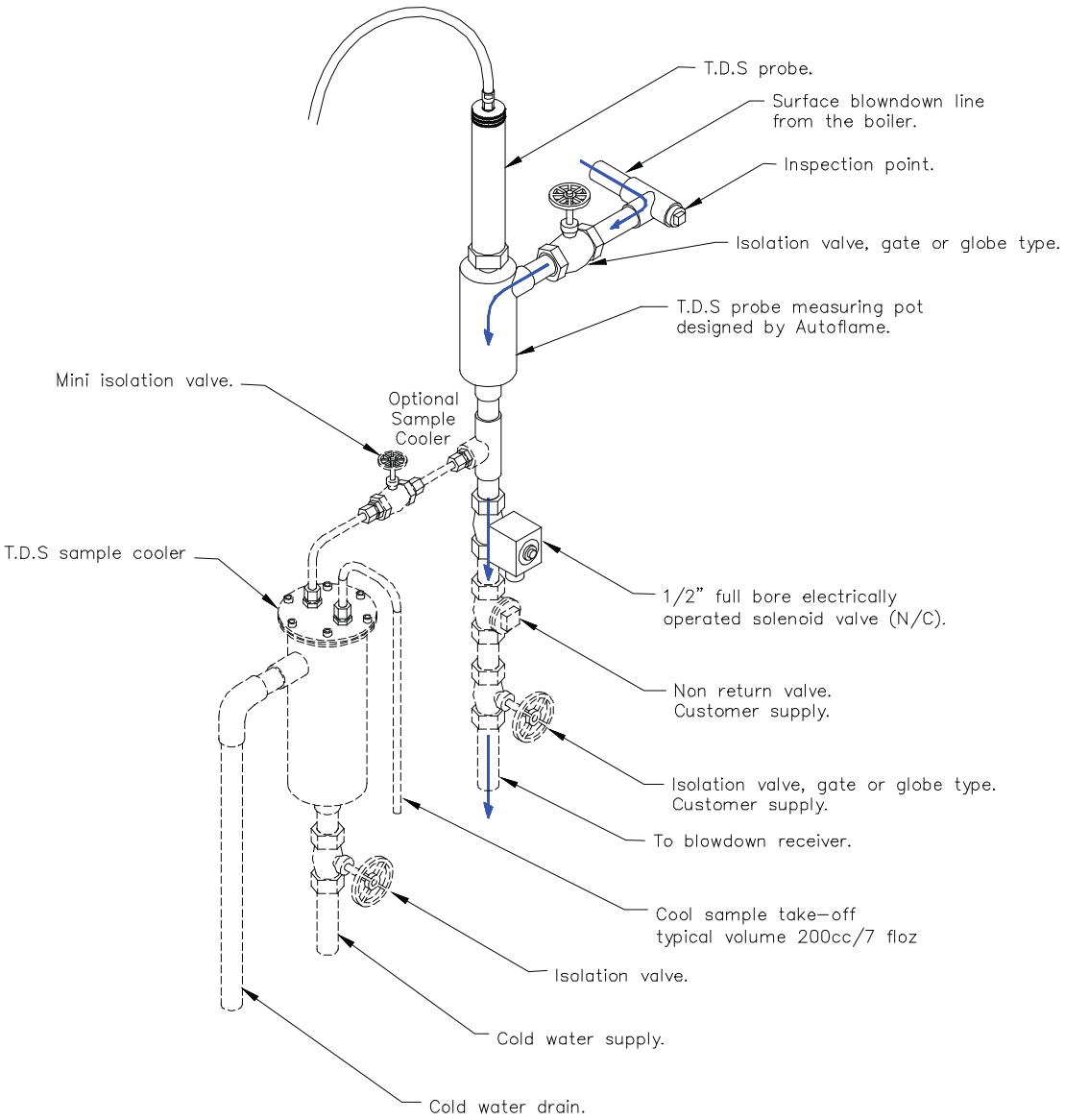

Option 2: Horizontally mounted

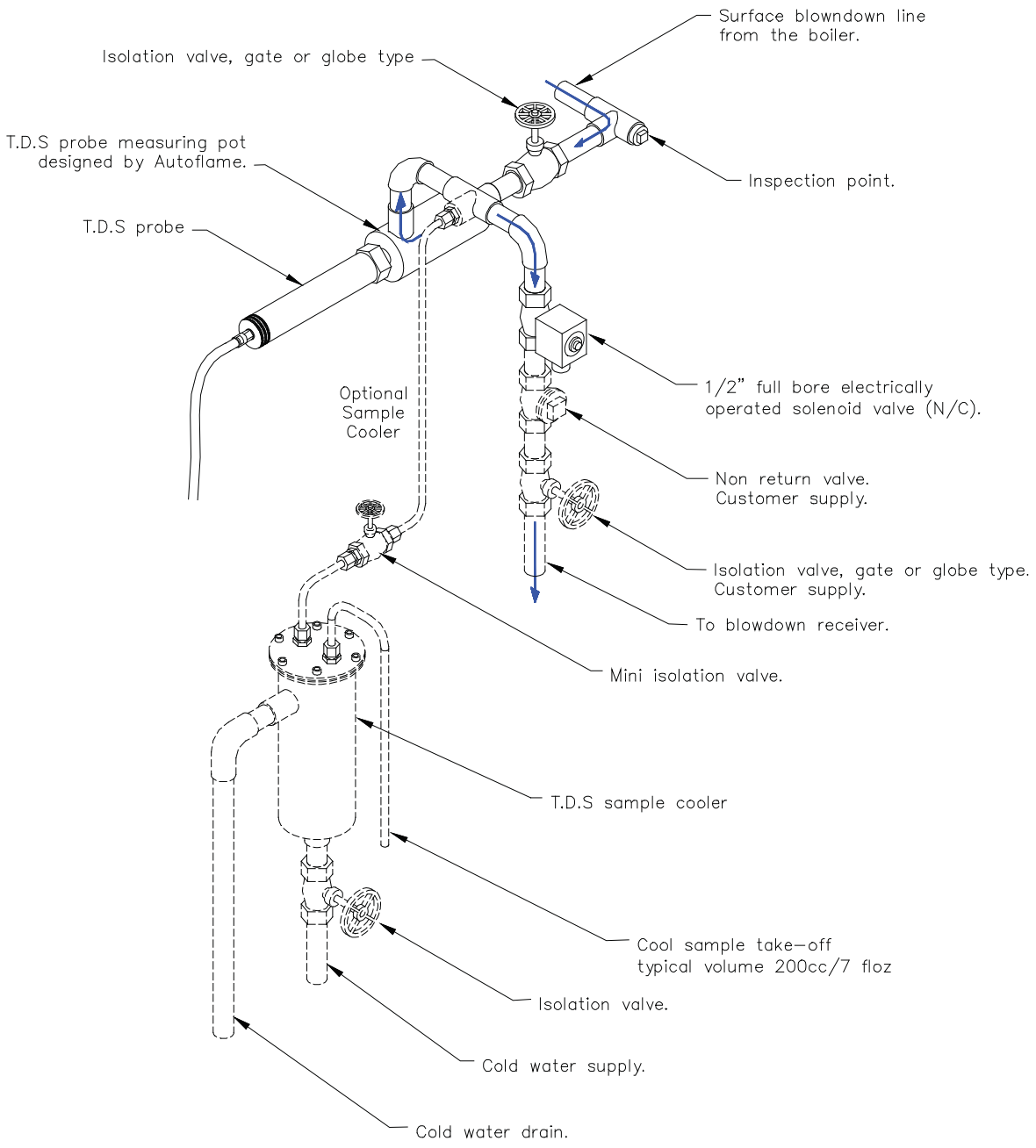

5.17.4 Schematic Detail of the Measurement and Sample Routine

The time for one complete measurement cycle is 3 Milliseconds. It can be seen that 10 measurement cycles are made within one second. These measurements are averaged over one second.
Conductivity is calculated by dividing measured milliamps by 0.5 volts which gives a value in micro-siemens.

At the start of each measurement cycle the sample is checked for polarization. This background voltage effect is taken into the conductivity calculations.

Temperature and pressure is measured by the Autoflame system and this information is used to continually modify the calculated conductivity/T.D.S value from its calibrated point. Nominally for every 1 degree C increase or decrease, 2% is added or subtracted from the conductivity value. The exact figure is calculated by the system.

The system relates conductivity in micro siemens to T.D.S in P.P.M by a 0.7 multiplier. Within the control software there is an adjustment of +/- 7% for this multiplier which is user variable.

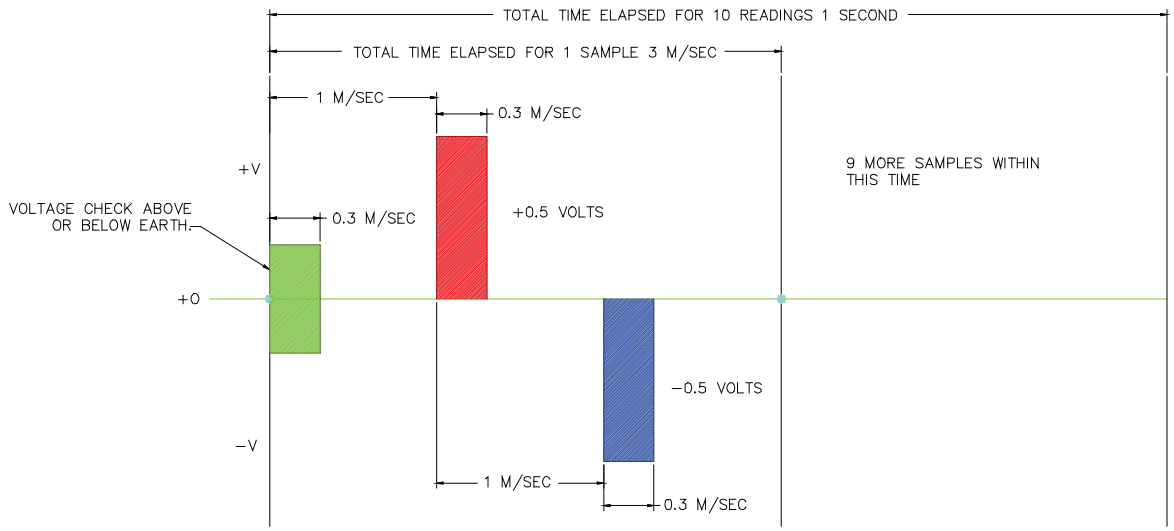

The T.D.S system logs each of the samples within the 1 second time period, It takes all 10 sample values, adds them together then divides them by 10 to obtain the average T.D.S value for the one second period.

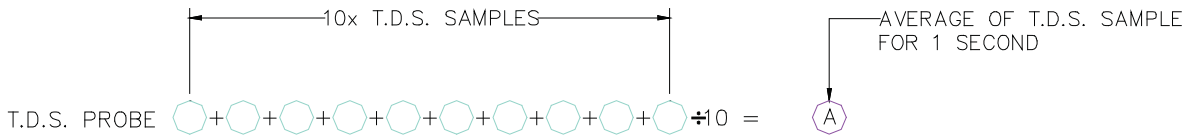

Once the T.D.S software has calculated the average T.D.S value for the 10 samples within one second, it will then extract these averages and add the last 10 together and divide them by ten to give the actual T.D.S reading. This value will be displayed on the MM.

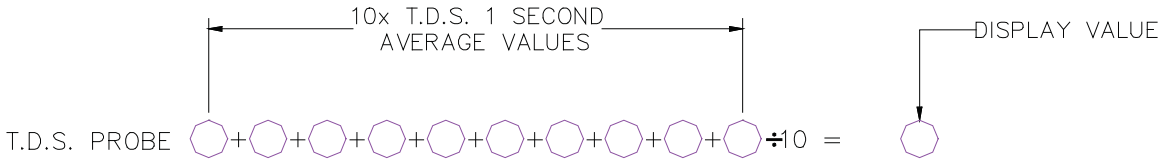

When a new average of the 1 second samples is obtained the software will utilize the last 9 averages, it will then add the new average to them and divide it by 10 to obtain the new T.D.S value.

5.17.5 Relationship between Conductivity, Temp and TDS values

A	=	These values measured by probe & sensors at operating steady state conditions.
B	=	This value is conductivity value multiplied by 0.7 (TDS in PPM)
C	=	This conductivity value temperature corrected to 25 degrees C / 77 degrees F.
D	=	This is measured TDS value entered into the system to effect a user "calibration."

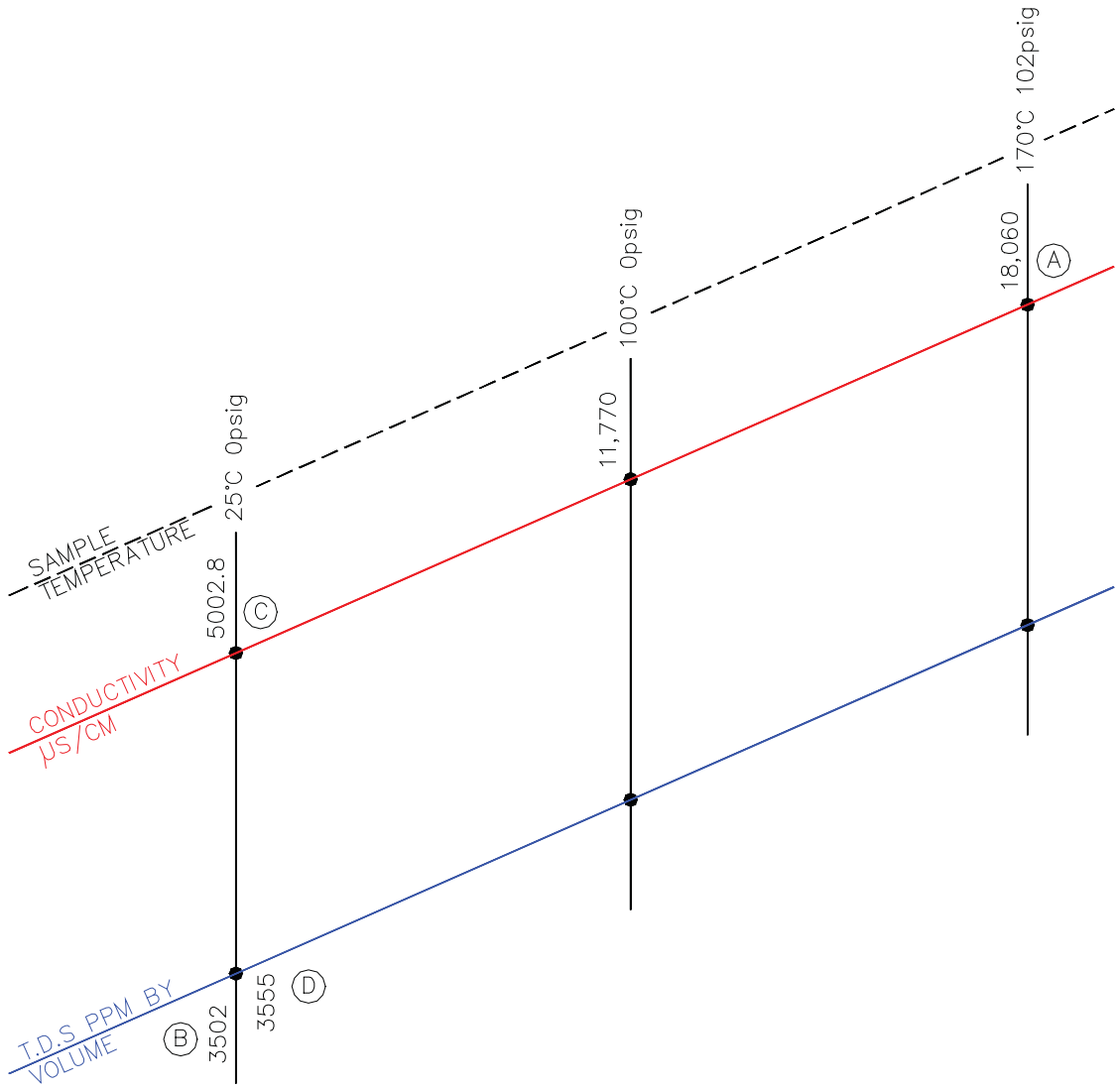

1. Conductivity measurement corrected at 2% per 1°C.
2. At 25°C TDS in PPMv is calculated by multiplying the conductivity value by 0.7.
3. Both of the above multipliers are user variable to accommodate specific site conditions.

1. At the time of manufacture every TDS probe has buried in its electronics memory a "Calibration Correction Coefficient" or CCC This is effected as set out below.

The TDS probe in a sampling vessel is immersed in a boiler water sample of a known TDS (i.e. 3500ppm for example). This is carried out at 25°C (77°F) which would give a reading in micro-siemens of 5000. If the reading from the probe electronics does not agree with this a correction multiplier or divider is implanted into this specific probes electronic memory. This is its own dedicated CCC value.

2. The perfect solution for TDS control would be that the minimum amount of surface blowdown is carried out to keep the dissolved solids at or below the nominated value set on the controller. It follows that the amount of surface blowdown required is directly proportional to the evaporation rate and therefore the firing rate of the boiler/burner unit.

If for example the boiler is operating at a steady state rate of 50% evaporation, the amount of blowdown time would have to be doubled at 100% rate or MCR and halved if working at 25% or 4:1 turn down. There is an option within the software to enable this facility which will guarantee that minimum energy is lost to surface blowdown while ensuring sufficient blowdown is implemented to keep TDS levels at the desired value. This is possible because the Autoflame system knows the firing rate of the burner.

5.17.6 TDS Probe and Autoflame Sampling Vessel

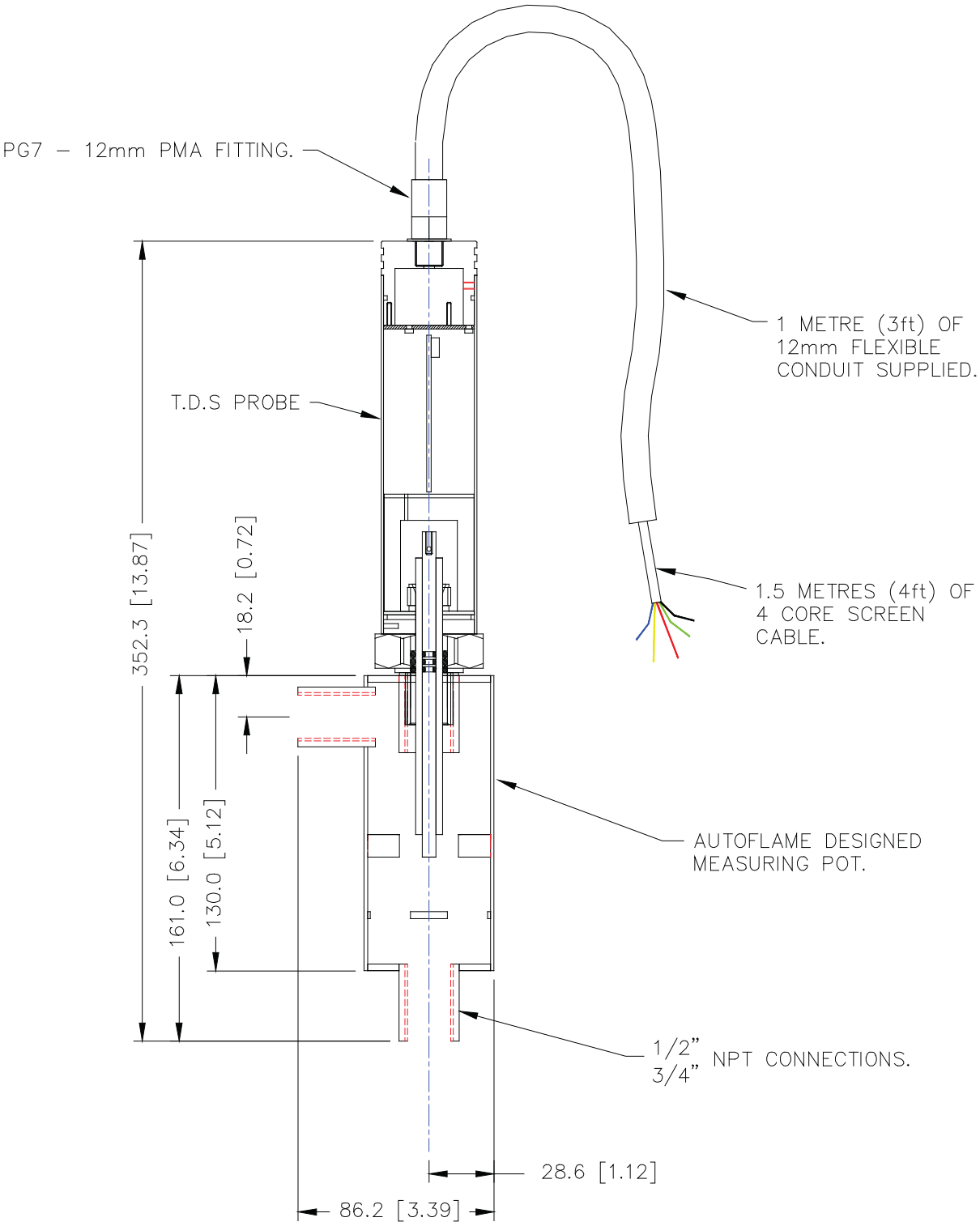

5.17.7 Top Blow Down Management

The day to day Top Blowdown Management user screen is shown below. The system will open the top blowdown valve on an intelligently timed basis such that the MEASURED value of Total Dissolved Solids (TDS) is maintained at or just below the TARGET value. The screen will only be displayed if Water Level setup 23.1 is set to Enabled and TDS has been selected in the Boiler Configuration Screens.

At the top of the screen the various stages of top blowdown are displayed as they occur, with a down counter indicating the number of seconds left for this stage. When the Top Blow Down is operating the possible messages are:

BLOW DOWN MEASURE
SETTLEMENT
MEASUREMENT
BLOW DOWN
INTERVAL - This interval value only monitors Top Blowdown when the solenoid valve is utilised - The sampling interval when using the Continuous blowdown runs independently, based on WL Setup 34.1. All other messages are relevant.

If the burner is not firing the following is displayed:
TOP BLOW DOWN NOT OPERATING
BURNER NOT FIRING

If the burner is firing and steam pressure is not up to the Threshold Offset the following is displayed:
TOP BLOW DOWN NOT OPERATING
STEAM PRESSURE BELOW THRESHOLD

If there is no data being received from the TDS probe following is displayed:
TOP BLOW DOWN NOT OPERATING
WARNING PROBE FAULT

Also from this screen, the TDS target value and calibration of the TDS probe (actual TDS value) are adjusted.

5.17.8 Top Blowdown Adjusters

The Top Blowdown Adjusters allow the Top Blowdown Operation to be adjusted to suit boiler run conditions.

These must be accessed in Mk6 mode.

In Mk6 Mode, press the 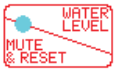

button until the day to day Top Blowdown Management screen is displayed.

Whilst the day to day Top Blowdown Management screen is being displayed press the COM button for 2 seconds so that the SET TDS TARGET VALUE screen is shown.

Press the 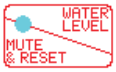

button twice. The ADJUSTERS screen shown below should be displayed. Note while in this screen there is no top blowdown operation.

Use the channel 2 UP/DOWN buttons to select the item to be adjusted.

Use the channel 3 UP/DOWN buttons to adjust the value units. Where appropriate the channel 5 UP/DOWN buttons can also be used to change the value by 10.

Press RUN to return to normal operation. When the run button is pressed all Adjuster values are stored in memory.

Factory Setting	Setup Value	Description
30	2 - 300	**Blow Down Time:** Time the Top Blow Down valve is opened for
60	5 - 900	**Interval Time:** Time between Top Blow Down samples
Disabled	Disabled 1 - 100%	**Load Dependant Blow Down Timing:** If disabled not effected. Value entered is a load index reference point - ideally the load index point at which the Top Blow Down operation was set up. For example: set to 50%. When the top Blow Down takes place if the current load index postion is 100% the Blow Down Time will be doubled. (100/50). If at 25% the Blow Down Time will be halved (25/50). Note the Load Index must be entered before Top Blow Down is commisioned. (See Options 57&65)
0.70	0.50 - 1.50	**MicroSiemens To TDS Factor:** The TDS probe measures conductivity in microSiemens. This factor is used to derive the TDS value in ppm. Eg. 5000uS * 0.7 = 3500 ppm.
10	Disabled 1 - 50 PSI 1 - 5.0 BAR	**Steam Pressure Threshold Offset Below Required:** If the MM ACTUAL value is less than the REQUIRED value minus this offset then the Top Blow Down does not operate. For example: Required = 100PSI Offset value = 10PSI. Top Blowdown starts to operate when steam pressure reaches 90PSI. Once this threshold is met after the burner fires Top Blowdown stays operating even if the presure drops below thereafter.
No	No Yes	**Reset defaults:** Resets all adjusters to default values & TDS probe to preset calibration. Select YES then press RUN.
2500	50 - 9990	**TDS Target Value**
1.80%	0.20% - 3%	**Temperature Correction Value**
1000	100 - 9990	**Calibration Correction**
5	2 - 10	**Settlement Interval:** After a blowdown measure, this is a period where the sample can settle before the TDS is measured
5	2 - 10	**Measurement Time:** This is how long the sample is measured to get an accurate TDS value
5	2 - 10	**Blowdown Measure Time:** This sts how long the solenoid valve is open to get a fresh sample of boiler water.
ppm	ppm uS	**Sets ppm or microSiemens (uS):** Parts per Million MicroSiemens
0	0 1 -	**Upper Limit Offset:** Disabled Enabled - value set is an offset above the target value at which alarm trips **Note:** Once the limit has been exceeded, terminal #79 will be set. On the top blowdown screen, the water level LED will flash. Press the water level button to mute the alarm. The alarm limit value will flash until the measured TDS value has fallen below the limit value. Another alarm will not be generated until the measured TDS value has been continuously below the limit value for 10 minutes.

5.17.9 TDS Timing Diagram

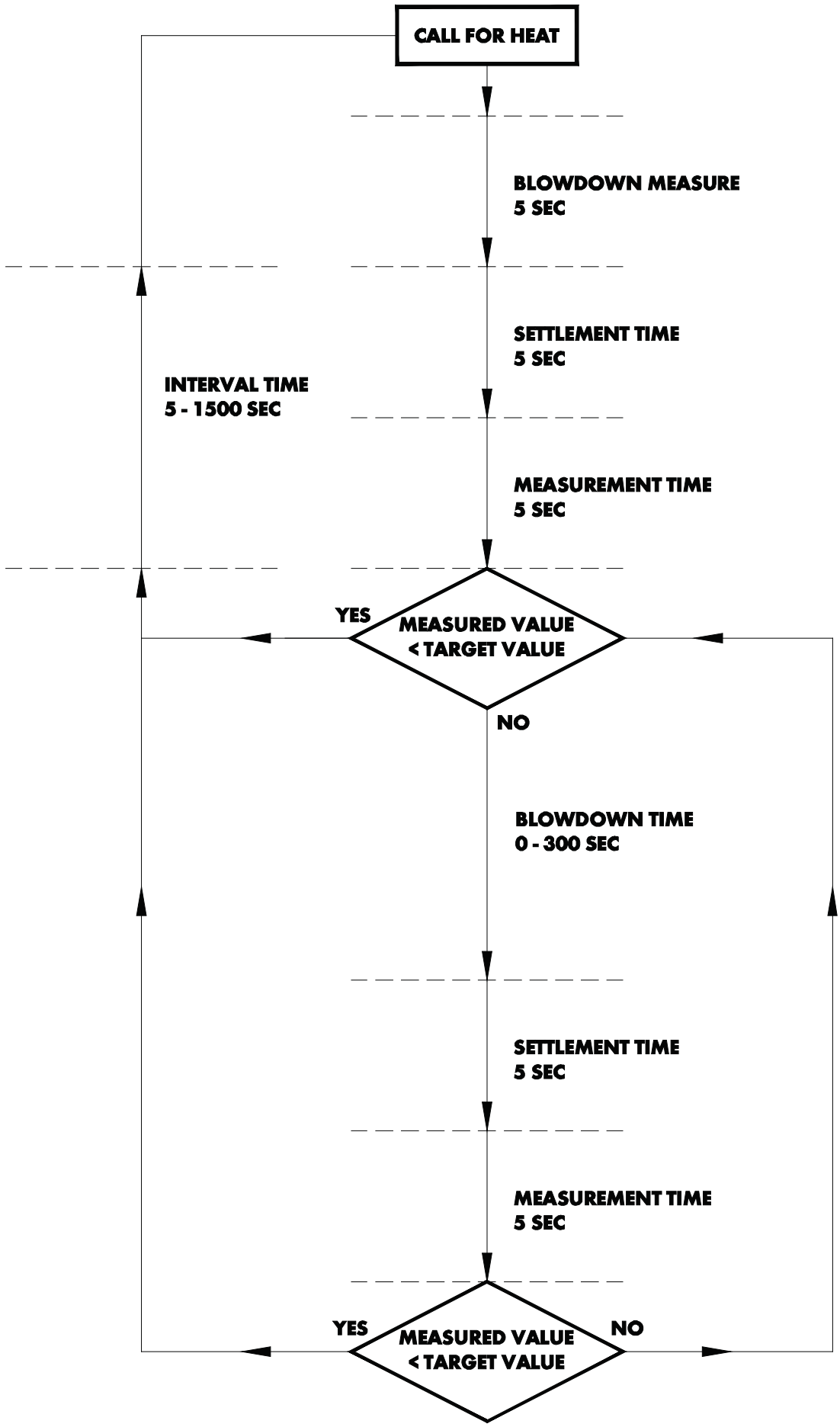

SECTION 6: DATA TRANSFER INTERFACE

6.1 DTI MODULE

6.2 INFORMATION AVAILABLE FROM THE DTI SYSTEM

6.3 COMPLETE DTI STANDARD SYSTEM APPLICATION EXAMPLE

6.4 MULTI KILN DTI SPECIAL SYSTEM APPLICATION EXAMPLE

6.5 FRONT FACIA LAYOUT

6.7 I/O SYSTEM CAPABILITIES

6.8 COMMUNICATION INTERFACE SCHEMATIC SYSTEM CAPABILITIES

6.9 WIRING CONNECTION TERMINALS DIAGRAM

6.10 DTI FIXING HOLES AND DIMENSIONAL DETAILS

6.11 DTI INTERCONNECTIONS

6.11.1 MM Modules

6.11.2 EGA Modules

6.12 PCB SWITCH SETTINGS AND LINK ARRANGEMENTS

6.12.1 Restore to Factory Settings

6.13 DTI, PC AND MODEM INTERCONNECTIONS

6.14 ANALOGUE INPUT/OUTPUT

6.14.1 Introduction, Features & Benefits

6.14.2 Facia Layout and Internal Connections

6.14.3 Setup Configuration for direct connection to M.M. unit

6.14.4 Front Facia Layout with LED description

6.14.5 Fixing Holes & Dimensional Details

6.14.6 Wiring Connection Diagram

6.14.7 M.M. to Analogue Input/Output Unit Connection Diagram

6.14.8 DTI to Analogue Input/Output Unit Connection Diagram

6.14.9 Application Example

6.15 DIGITAL INPUT/OUTPUT MODULE

6.15.1 Introduction, Features & Benefits

6.15.2 Facia Layout and Internal Connections

6.15.3 Setup Configuration for direct connection to DTI unit only

6.15.4 Front Facia Layout with LED Description

6.15.5 Fixing Holes & dimensional Details

6.15.6 Wiring Connection Diagram

6.15.7 DTI to Digital Input/Output Unit Connection Diagram

6.17 MODBUS INTERFACE

6.17.1 Overview

6.17.2 OX References - coils

6.17.2.1 Enable/Disable commands for each M.M

6.17.2.2 Digital Input/Output module outputs

6.17.3 1X References - Inputs

6.17.3.1 Digital Input/Output module

6.17.3.2 M.M. System

6.17.3.3 E.G.A. System

6.17.3.4 Online Offline Status

6.17.4 3X References - Input Registers

6.17.4.1 Analogue Input/Output module

6.17.4.2 M.M. System

6.17.4.3 E.G.A. System

6.17.5 4X References - Holding Registers

6.17.5.1 M.M. System

6.17.5.2 Analogue Input/Output module outputs

6.17.6 PCB Switch Settings

6.17.7 Other Information

6.17.7.1 Modbus Transmission Serial Port Settings

6.17.7.2 Supported Commands

6.17.7.3 Supported Exception Responses

6.17.7.4 Serial Port Connections

6.17.8 Relevance of MM/EGA Data

6.17.9 Further Information

6.18 AUTOFLAME WINPCDTI SOFTWARE

6.19 JOHNSON METASYS INTERFACE

6.19.1 Overview

6.19.2 Connecting the DTI to Metasys

6.19.3 Network Point Table

6.19.3.1 First 10 addresses (MM/EGA units)

6.19.3.2 Eleventh address (I/O units)

6.20 OTHER INFORMATION AND ILLUSTRATIONS

6.20.1 Loop Back Test

6.20.2 Communication Interfaces

6.1 Data Transfer Interface Module

6.1.2 Overview of Data Transfer Interface Operation

By means of the Autoflame Data Transfer Interface (D.T.I.) module, all of the operational data, stored within each of up to ten M.M. modules, can be collected by the D.T.I. for transmission to a local terminal (PC), screen and printer, Building Management System (B.M.S.) or PLC. This facility can also be achieved remotely via modem/telecom link up. This cost effective system more than meets the requirements of today's E.M.S. and B.M.S. systems in providing all the necessary operational and alarm status and control of boiler plant to achieve its maximum energy efficient operation.

Up to a maximum of ten M.M. modules (one per burner) can be connected to one D.T.I. module by means of a series RS485 data link (daisy chain). The information gathered by the D.T.I. from each M.M. module is then available for transmission to the E.M.S. or B.M.S. via either an RS232 data link, an RS422 data link, an RS485 data link or modem/telecom data link. The RS232 and RS422 data links are used to send the data via the Autoflame software package for PC management or MODBUS communications for a Building Management System. The RS485 data link is used to send the data via Metasys communications.

Remote on/off control of the burners can also be achieved as well as adjustment of the temperature or pressure setpoints and selection of sequencing order. To accommodate the status information from other plant related equipment, the D.T.I. can handle upto 160 direct mains voltage inputs, 80 volt free outputs, 60 4-20mA inputs and 60 4-20mA outputs. Typical remote E.M.S., B.M.S. information and operational facilities that can be achieved are as follows, but are subject to the particular site and management system requirements that are to be accommodated.

The capability exists within the standard D.T.I. software for the end user to label any mains voltage signal input as an "Alarm" condition. When labelled as an "Alarm" condition the system can 'autodial' out onto the general telephone network to a remote office. It is also possible via a MODBUS to Ethernet converter to utilise this feature for data aquisition.

6.2 Information avaiable from the DTI

DTI Information:

MM Information:

Required boiler temperature (deg. C/F) or pressure (Bar/psi).
Actual boiler temperature (deg. C/F) or pressure (Bar/psi).
Burner on/off status.
Burner maximum firing rate.
Burner firing rate (%).
Fuel selected.
Control detector type (temperature/pressure).
Error conditions.
Low flame hold operation.
Hand operation.
Channel 1-Channel 4 positioning motor feedback signal
Channel 5-Channel 6 output and input signals to the VFD (inverter)
Maximum set point accepted from DTI.
Minimum set point accepted from DTI.
Lead boiler status.
Burner firing status (off, firing, purge, ignition).
Sequencing optioned.
Sequence status (on, stand-by, warm, off).
Enabled/disabled status.
Total hours run and number of start-ups per fuel.
Fuel type, instantaneous flow rates and totalised flows per fuel.
Online air and fuel pressure values.

EGA Information:

EGA operation optioned.
Flue gas oxygen present value.
Flue gas carbon dioxide present value.
Flue gas carbon monoxide (unburnt combustibles) present value.
Flue gas nitirc oxide present value.
Flue gas sulphur dioxide present value.
Flue gas exhaust temperature, ambient temperature and delta temperature present value.
Combustion efficiency present value.
Flue gas oxygen commission value.
Flue gas carbon dioxide commission value.
Flue gas carbon monoxide (unburnt combustibles) commission value.
Flue gas nitirc oxide commission value.
Flue gas sulphur dioxide commission value.
Flue gas exhaust temperature, ambient temperature and delta temperature commission value.
Combustion efficiency commission value.
Cooler condition.
Identification number.
Fuel selected.
EGA error conditions.

DTI Information:

DTI Input values:

Boiler enable/disable.
Change required set point.
Select lead boiler.
Shuffle sequencing.
Set Load Index.

Water Level Information:

Actual Water Level
End of probe position
2nd low position
1st low position
1st low pre-alarm position
Control point position or pump on and pump off positions
High water pre-alarm position
High water position
15 First Out Annunciation inputs status
Instantaneous steam flow metering
Totalised steam flow metering
Feed water temperature
Steam temperature

Continuous Emissions Monitoring Software (CEMS):

Current emissions by weight and volume (O_2, CO_2, CO, NO, SO_2, H_2O, N_2, Total)
Totalised emissions by weight (O_2, CO_2, CO, NO, SO_2, H_2O, N_2, Total)
Efficiency
Exhaust temperature
Boiler exit velocity
Total heat input into boiler
Net useful heat into boiler
Heat loss to stack
Fuel flow

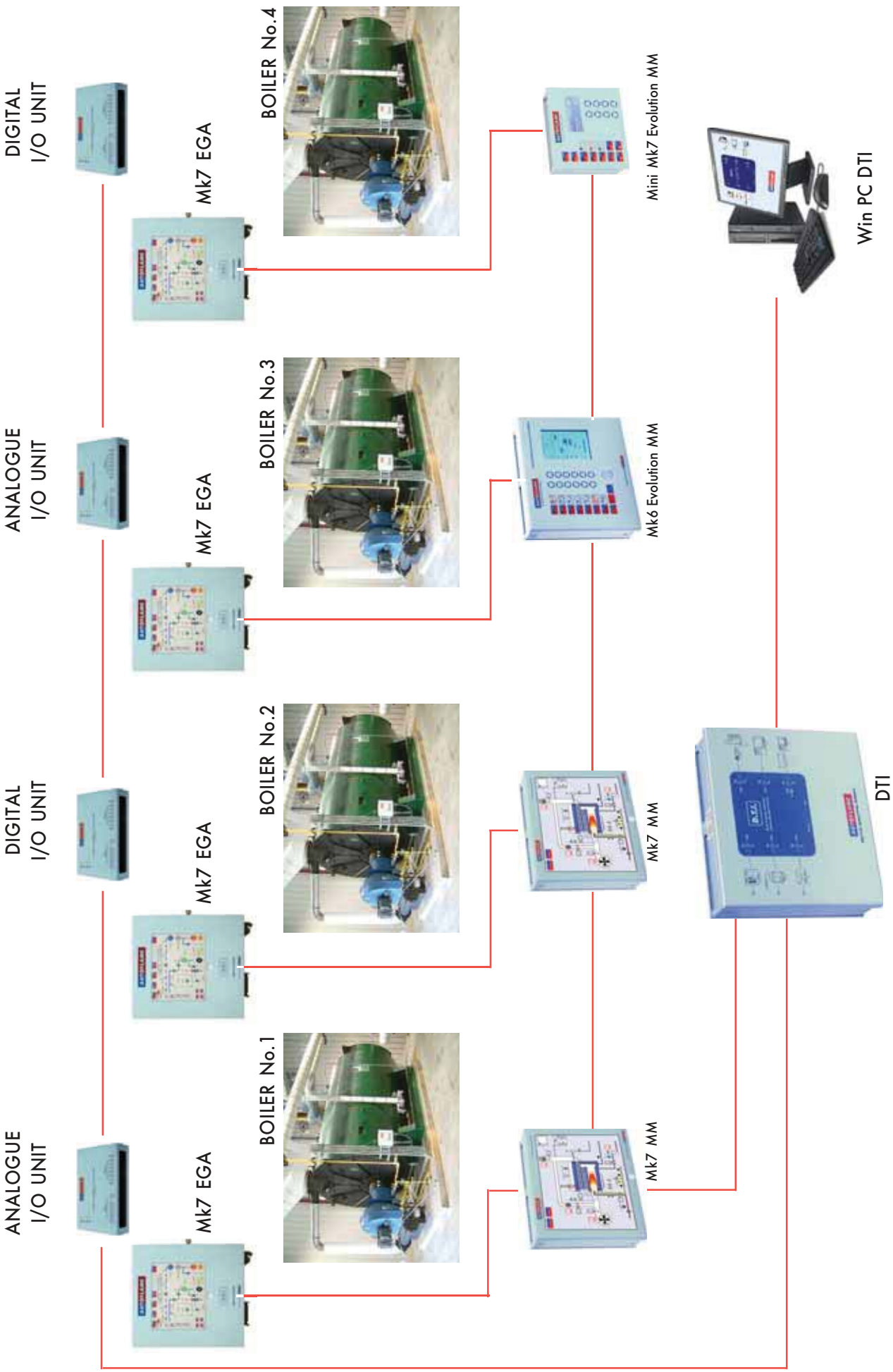
DIGITAL I/O UNIT
ANALOGUE I/O UNIT
DIGITAL I/O UNIT
ANALOGUE I/O UNIT
Mk7 EGA
Mk7 EGA
Mk7 EGA
Mk7 EGA
BOILER No.4
BOILER No.3
BOILER No.2
BOILER No.1
Mini Mk7 Evolution MM
Mk6 Evolution MM
Mk7 MM
Mk7 MM
Win PC DTI
DTI

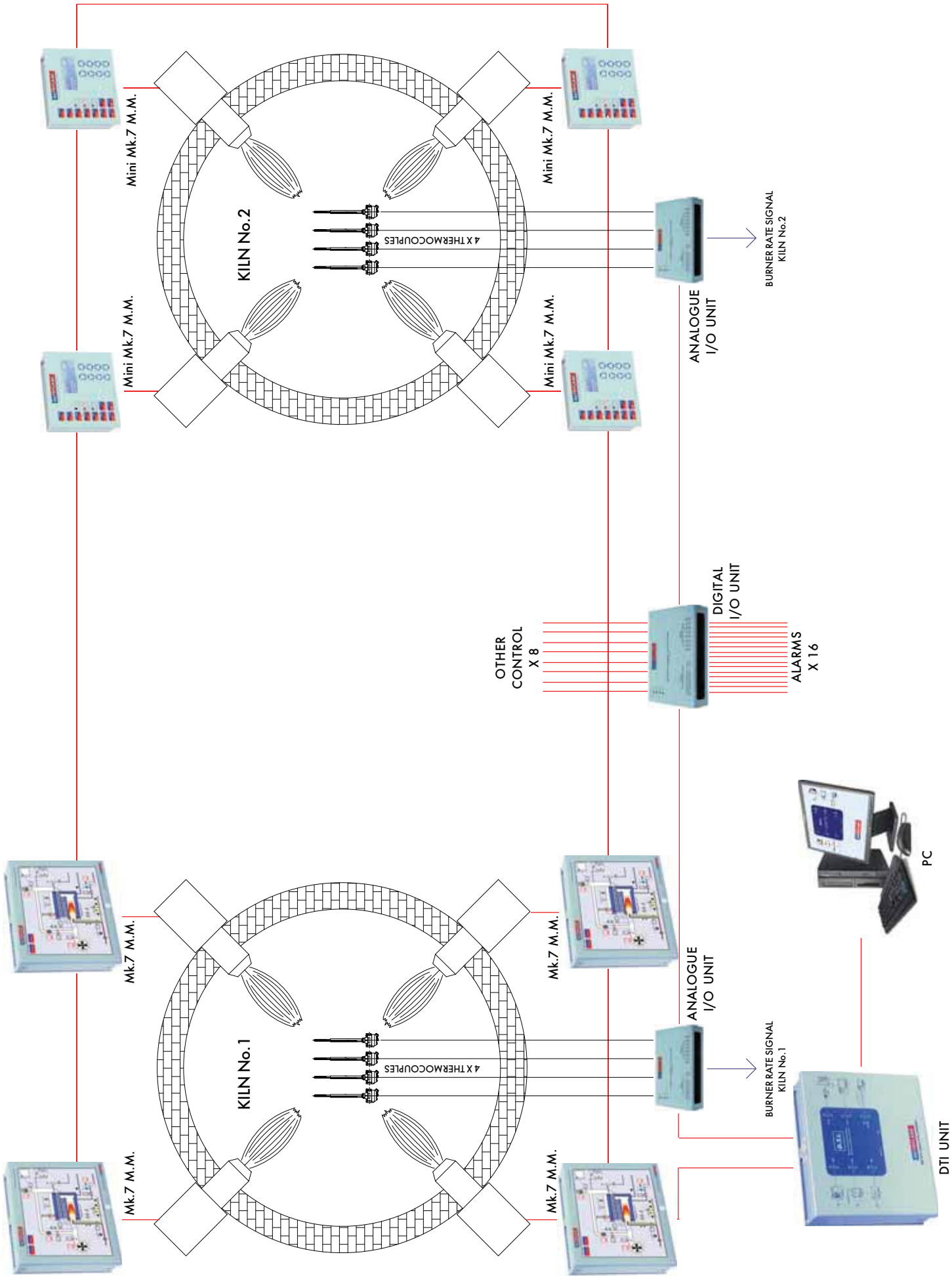
Mini Mk.7 M.M.
Mini Mk.7 M.M.
Mini Mk.7 M.M.
Mini Mk.7 M.M.
KILN No.2
4 X THERMOCOUPLES
ANALOGUE I/O UNIT
BURNER RATE SIGNAL KILN No.2
DIGITAL I/O UNIT
OTHER CONTROL X 8
ALARMS X 16
PC
Mk.7 M.M.
Mk.7 M.M.
Mk.7 M.M.
Mk.7 M.M.
KILN No.1
4 X THERMOCOUPLES
ANALOGUE I/O UNIT
BURNER RATE SIGNAL KILN No.1
DTI UNIT

6.5 Front Facia Layout

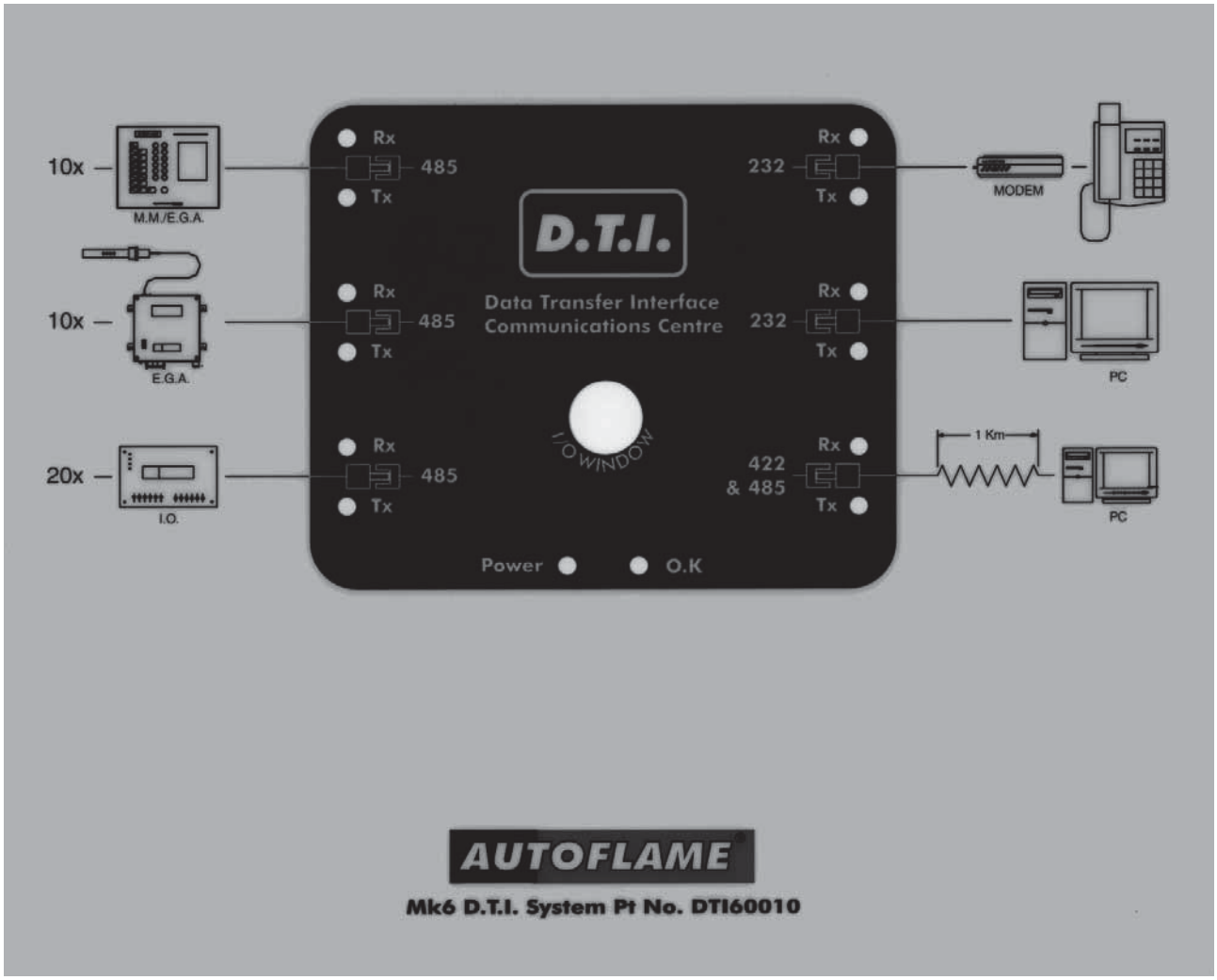

6.7 Input/Output System Capabilities

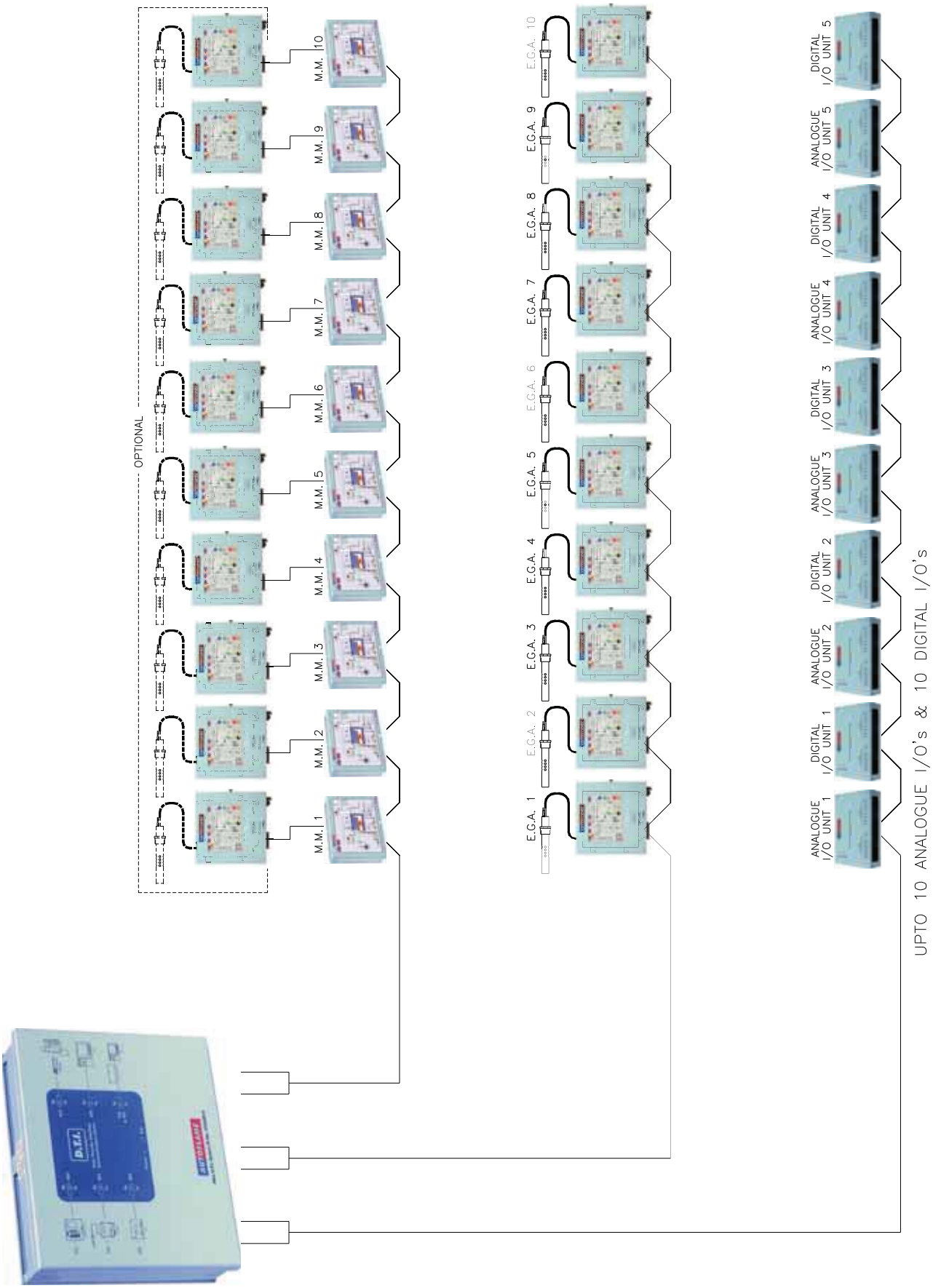

6.8 Communication Interface Schematic System Capabilities

The following communications ports are available on the DTI (contact Autoflame sales for other applications or other required protocols, i.e. BacNet, Ethernet, e.t.c.):

RS232 (serial port)- used for local PC's (less than 10m/40ft) using the Autoflame software or MODBUS
RS422 port- used for remote PC's (up to 1000m/4000ft) using the Autoflame software or MODBUS
RS485 port- used strictly for Metasys communications only
Modem port- used for telephone communications and the Autoflame software

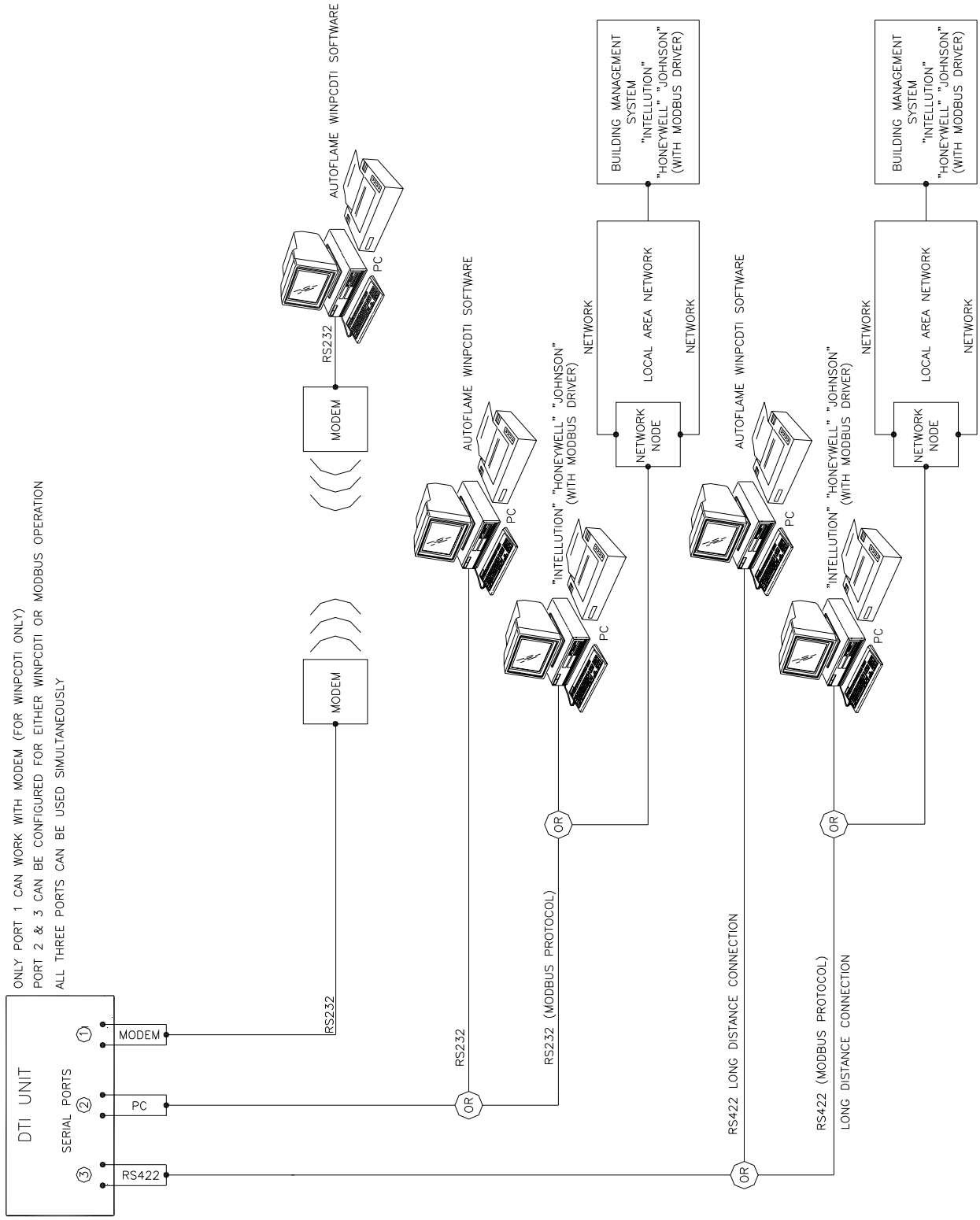

6.9 Wiring Connection Terminals Diagram

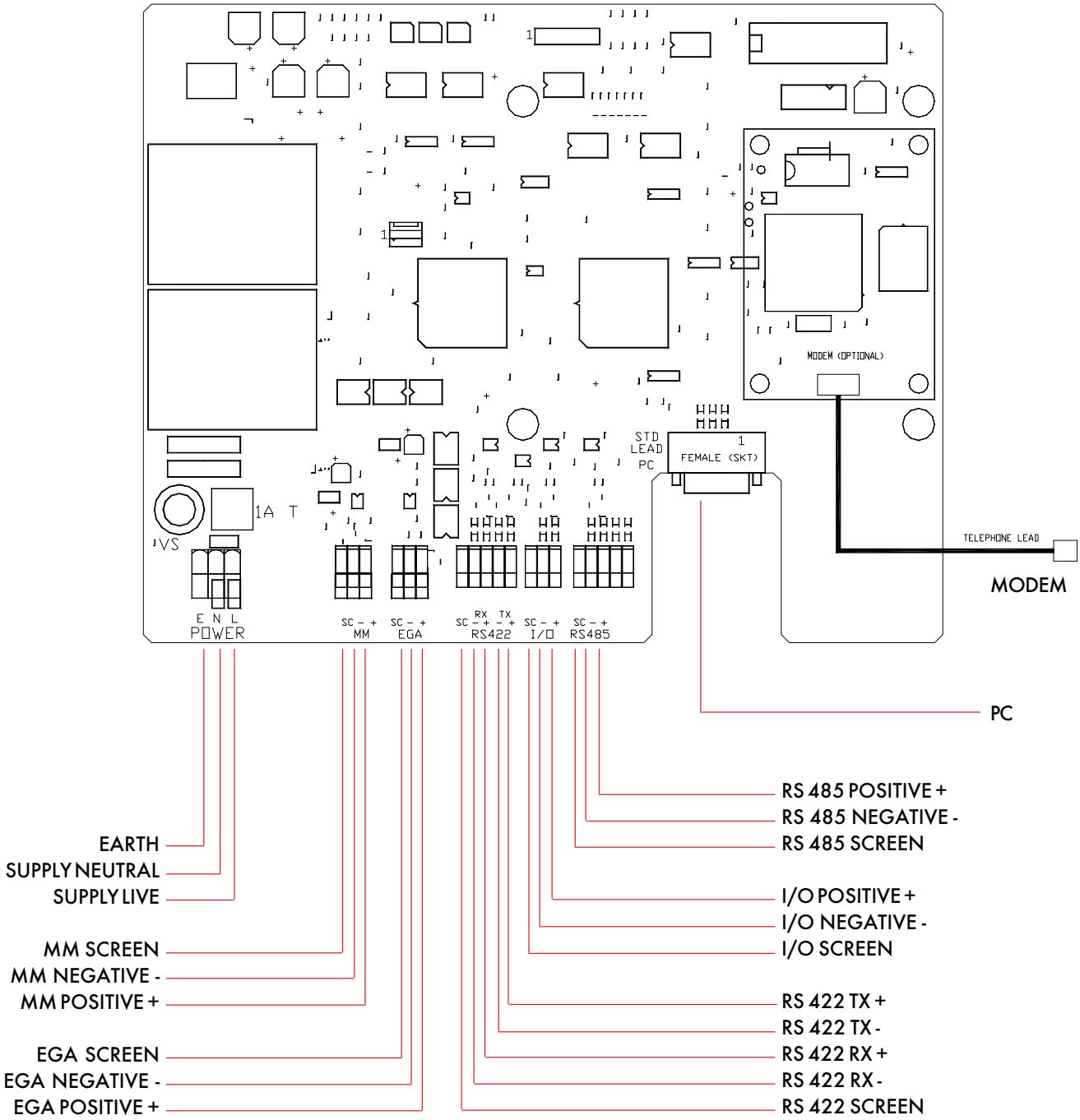

6.10 DTI Fixing Holes and Dimensions

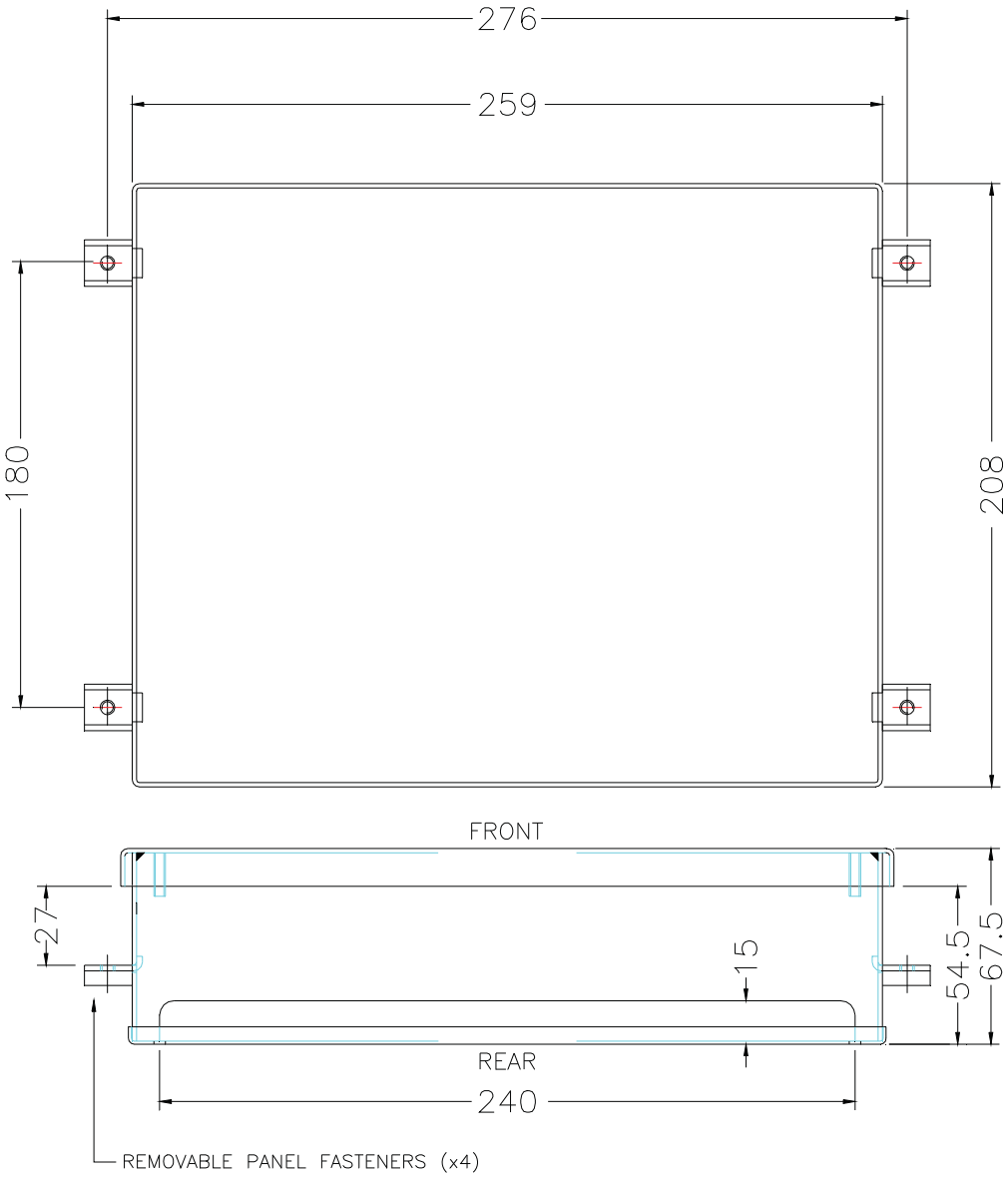

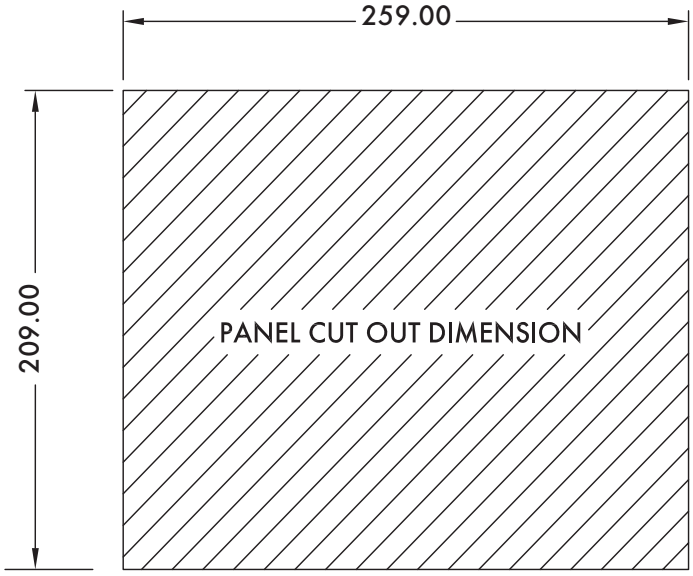

6.11 DTI Interconnections

6.11.1 M.M. Modules (M.M./E.G.A.)

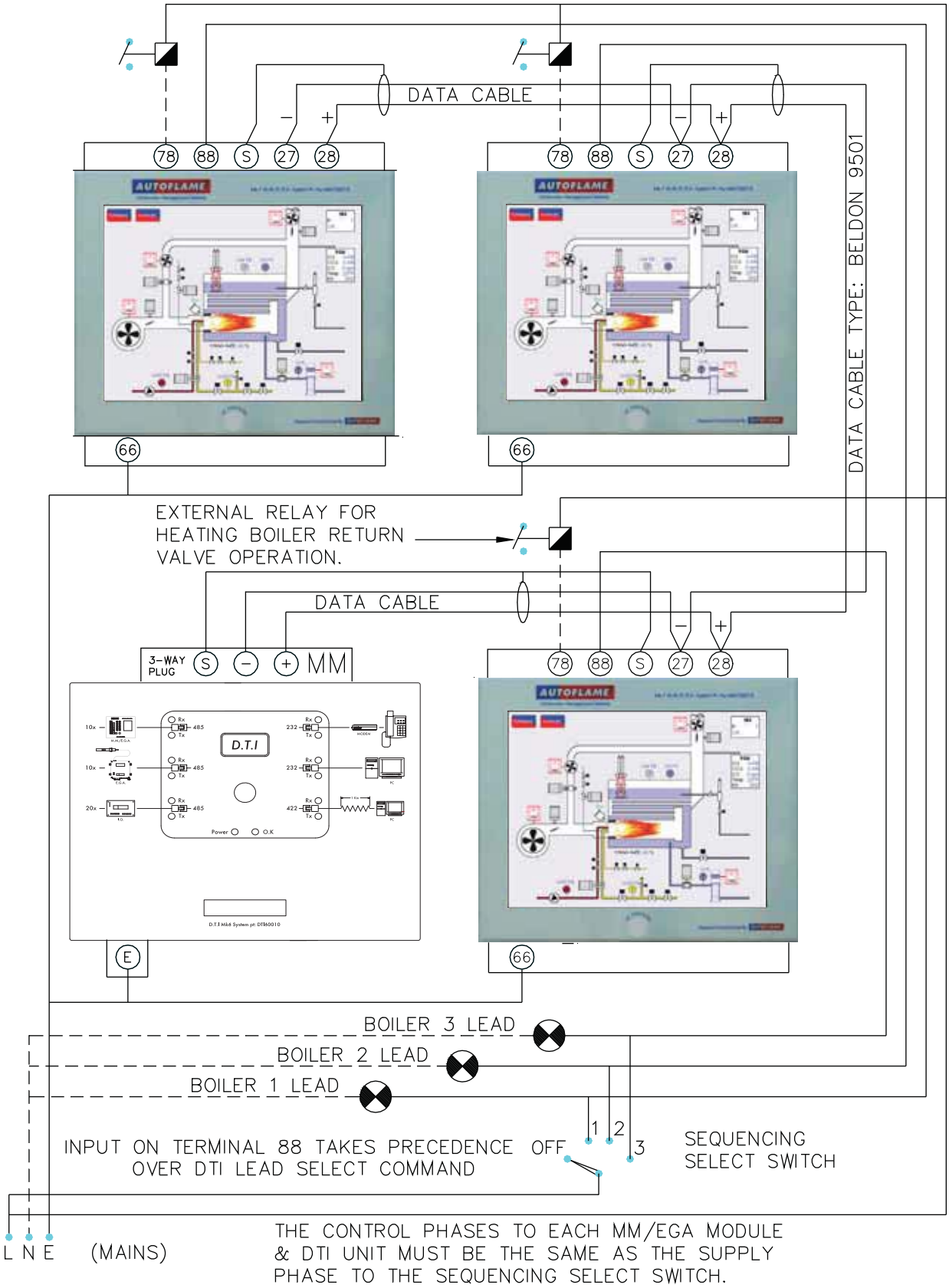

6.11.2 E.G.A. Modules (standalone E.G.A.)

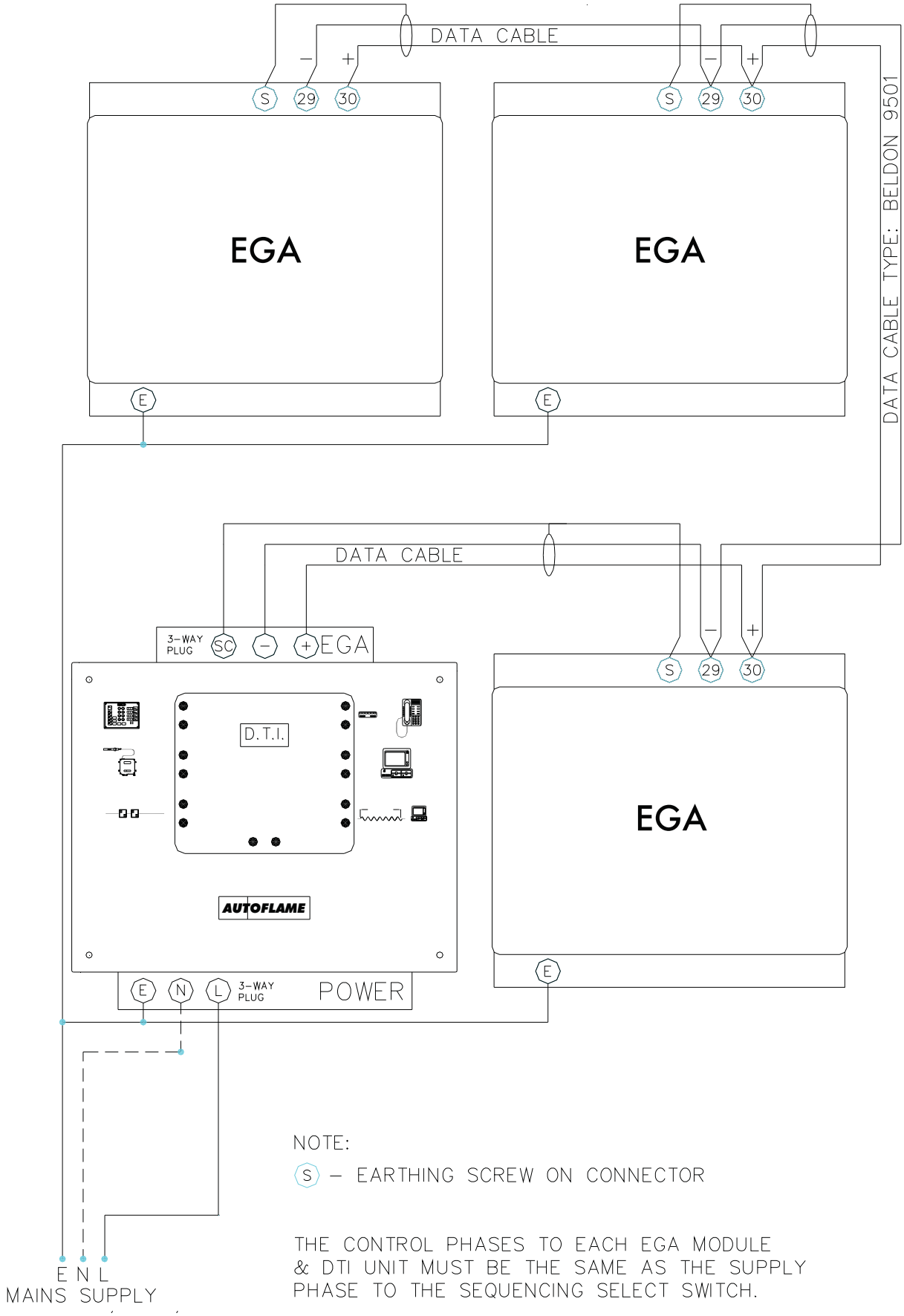

6.12 PCB Switch Settings

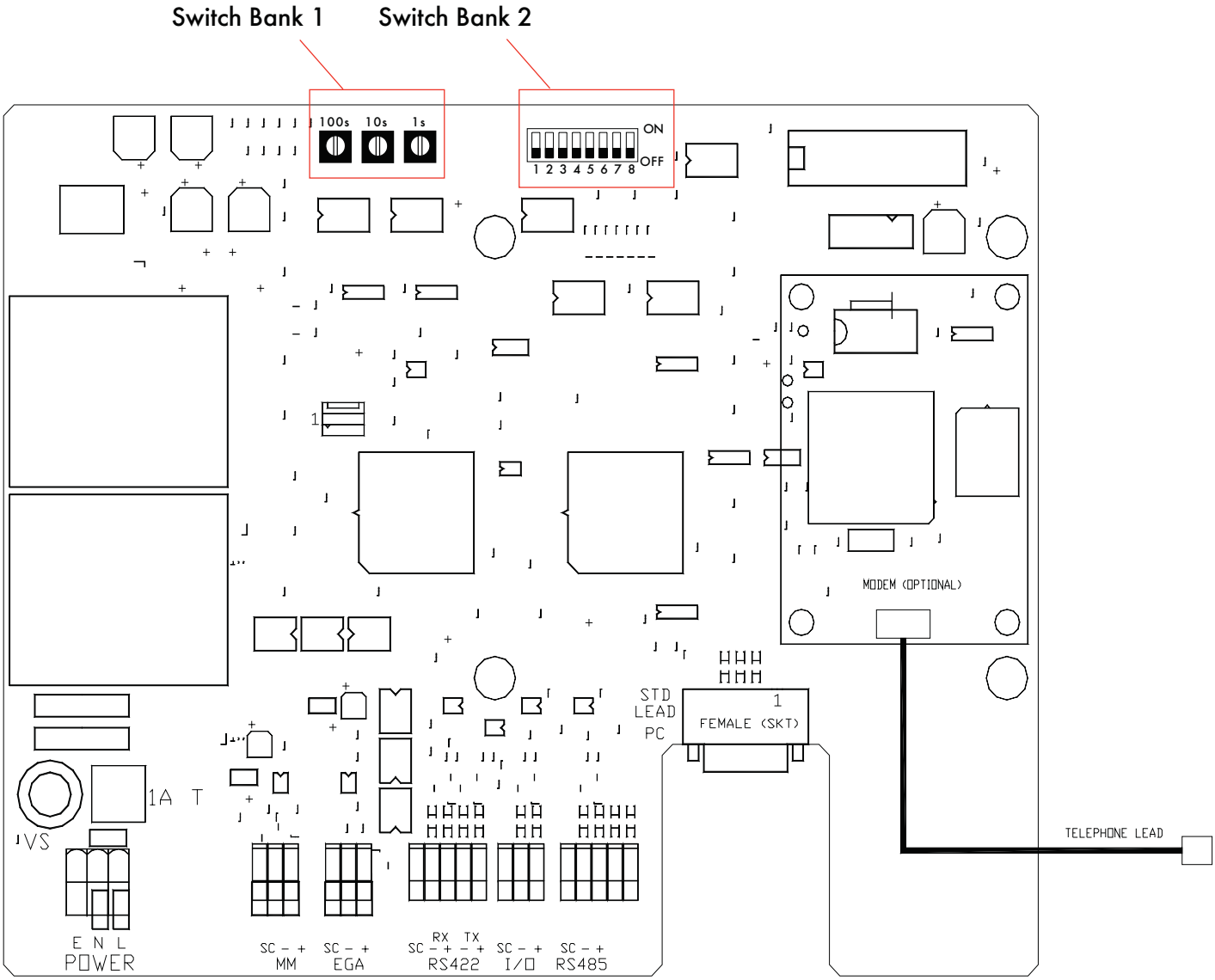

<u>Standard DTI - when used with WinPCDTI Software</u>

Switch Bank 1 - not relevant, set to 001

Switch Bank 2 - ways 1 to 8 all set to off unless using the older Mk5 and mini Mk5 M.M. modules

Way 8 MM Port Baud Rate
- off - 9600 (Mk6, Mini Mk6 and Mini Mk5 MMs)
- on - 4800 (Older Mk5 and Mini MMs)*

* Technical Memo: Data Communication Compatibility 3/9/1999

Settings for switch banks 1 & 2 may be different if the DTI is used for both WinPCDTI and Modbus/ Metasys operation. See sections 6.17.6.

6.12.1 To Restore Factory Settings

This procedure clears all congifuration data in the DTI and sets it back to default settings (configuration data includes, for example, alarm trigger conditions and labels).

Procedure

Switch Bank 1

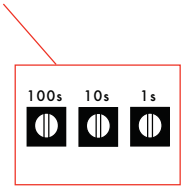

1. Power off the unit.

2. Set Switch Bank 1 address value to 789:
   100s = 7
   10s = 8
   1s = 9

   (Switch Bank 2 settings are irrelevant).

3. Power up.

4. Wait until the I/O transmit LED flashes (approx. 25 seconds)

5. Power off.

6. Set switches back to the required operational settings.

7. Power on unit.

6.13 DTI, PC and Modem Interconnections

Connection between PC and DTI MODEM

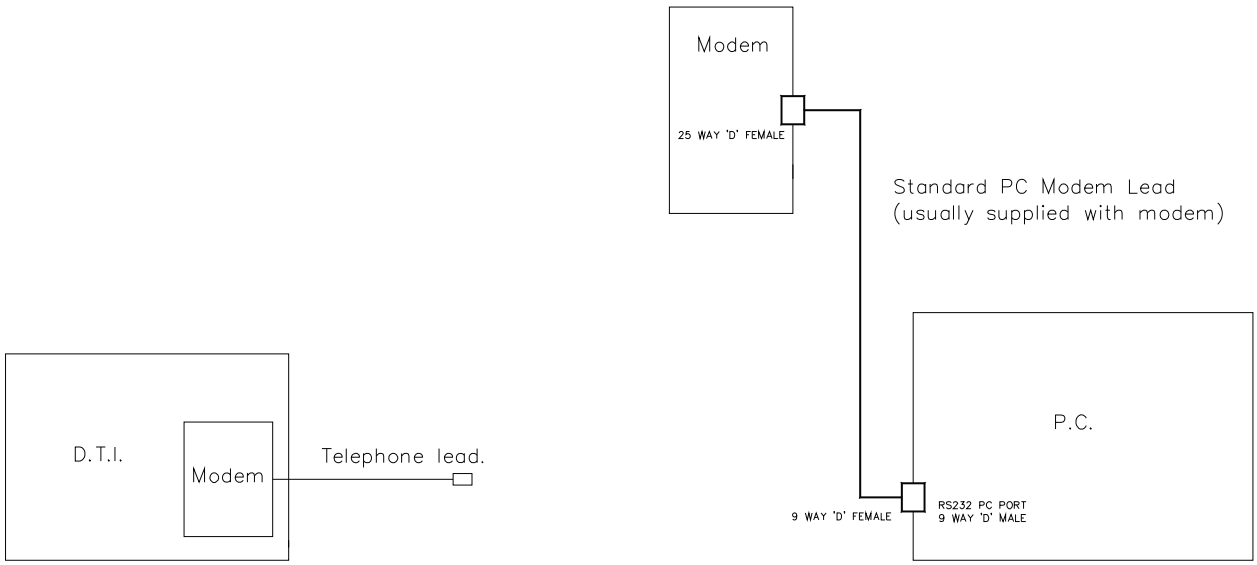

Connection between PC and DTI RS-422 port

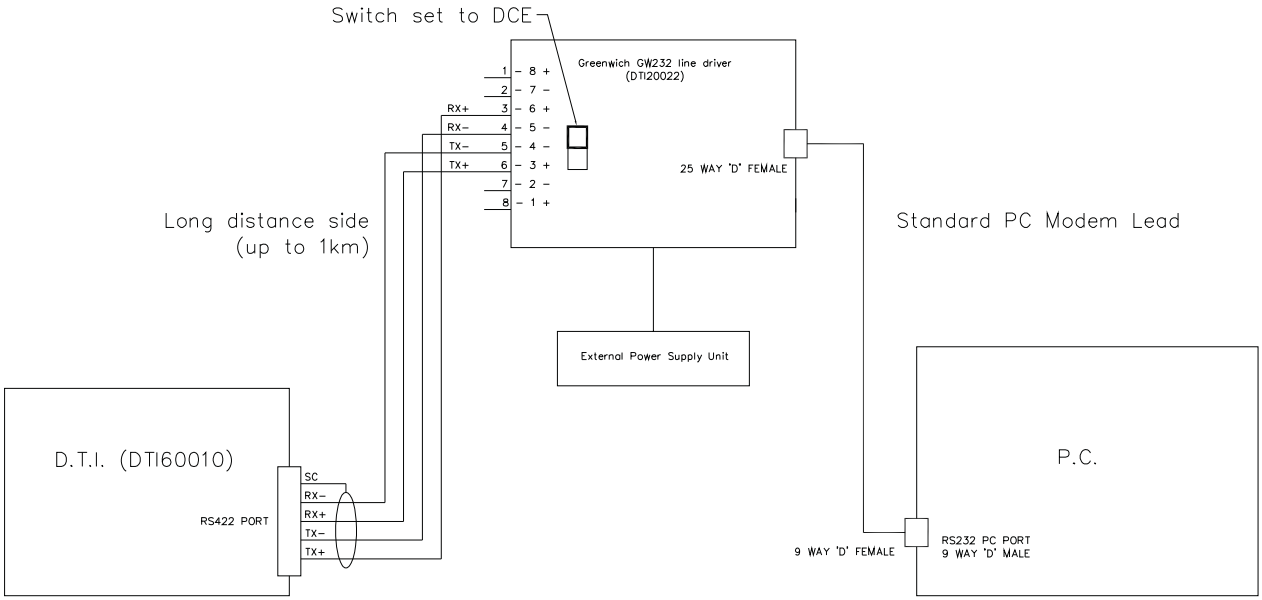

Example shown using line drive type GW232F made by Greenwich Instruments Limited.

Direct connection between PC and DTI RS-232 PC port

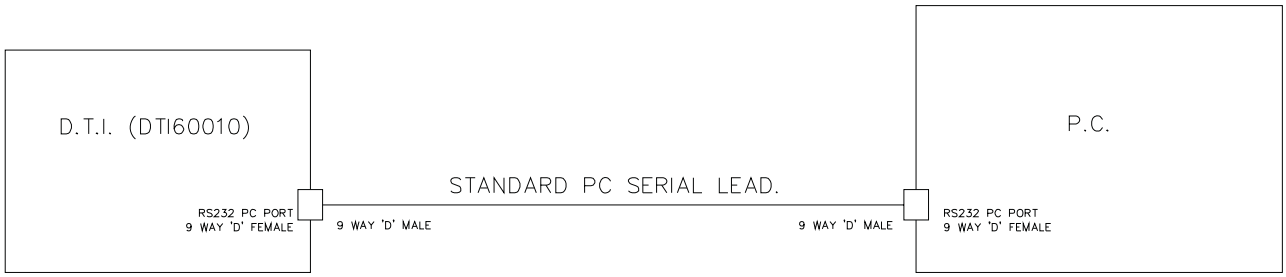

PC-DTI Cable (for older DTI units that do not use a standard PC serial lead)

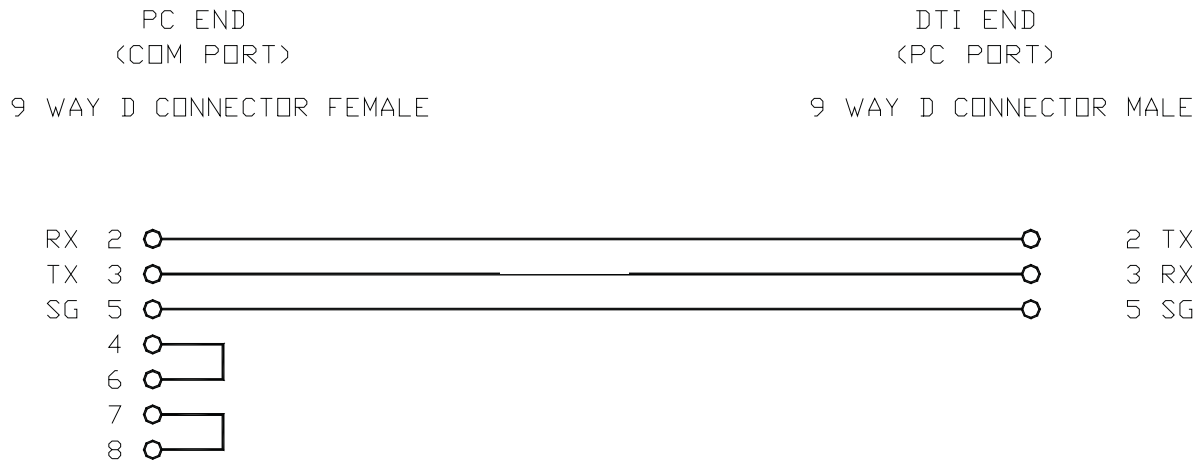

6.14.1 Introduction, Features and Benefits

Each analogue I/O unit has 6 analogue inputs and 6 analogue outputs. Each analogue input can be individually configured for 0-10 V, 0-20 mA or 4-20 mA, and each analogue output can be individually configured for 0-10 V or 4-20 mA. The unit is primarily for use with a Data Transfer Interface (DTI) unit. However, it can also be used in conjunction with most M.M. units to convert M.M. items of data to analogue outputs. Before operation the unit must be setup for its particular modes of operation by means of a serial port and a personal computer (emulating a terminal, e.g. windows hyperterminal).

When used with a DTI, up to 10 analogue input/output units can be linked together. These are linked in series (daisy chain) using an RS485 2-core shielded data cable. As well as the actual analogue inputs and outputs being configurable, the data range for each input and output can also be individually set. Text labels can also be assigned to each input and output. The latter items (data range/text labels) can be of use when the DTI is being used for a building management system or programmable logic controller type interface. It is also possible to set each of the analogue inputs to simply monitor the required control signal or this can be set to alarm if the signal exceeds a user-defineable value or if the signal drops below a user-defineable value. These alarm settings are unique for each input and also carry a time delay setting until the alarm is actually recorded. This ensures that if the signal is fluctuating, annoyance alarms are avoided. The analogue inputs can also be set to totalise and so an instantaneous reading is recorded and displayed, but a totalising value is also stored in the background and is viewable. However, in the vast majority of cases, these setups can be left as supplied.

Notes:

An external PSU is not required for the analogue outputs.
The maximum permissable load on each analogue output is 250Ω.
All the negative terminals are common to each other.
The analogue outputs as a whole are isolated.
The analogue inputs are not powered internally by the analogue I/O module and so a 24V dc supply may be required for each input, depending on the controller.

6.14.2 Facia Layout and Internal Connections

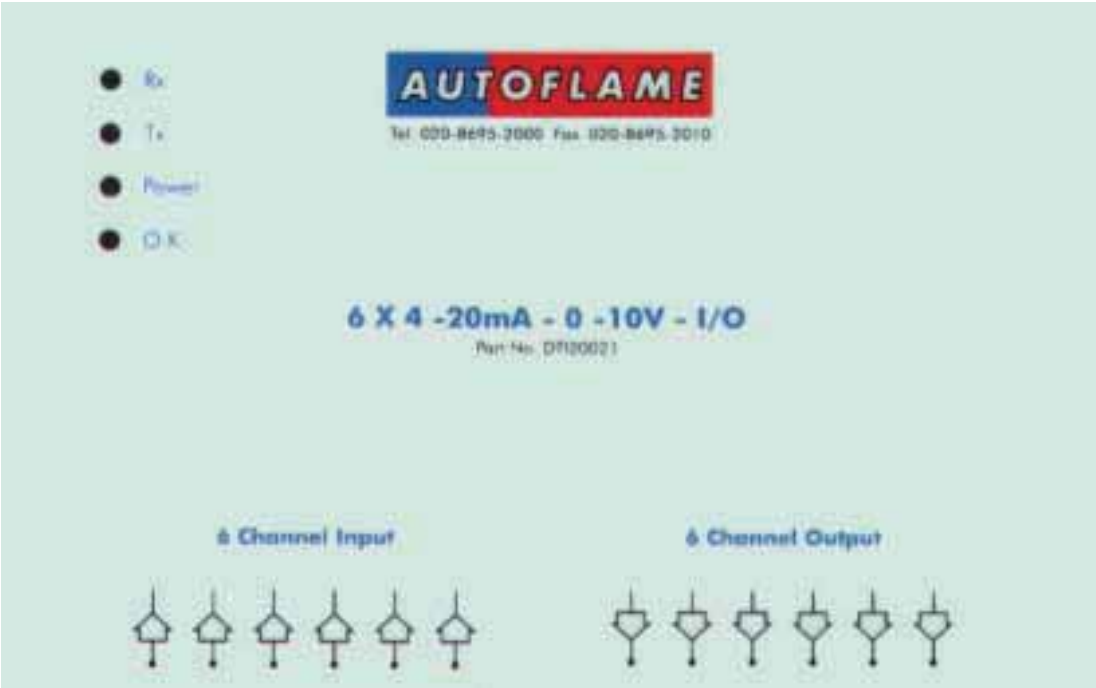

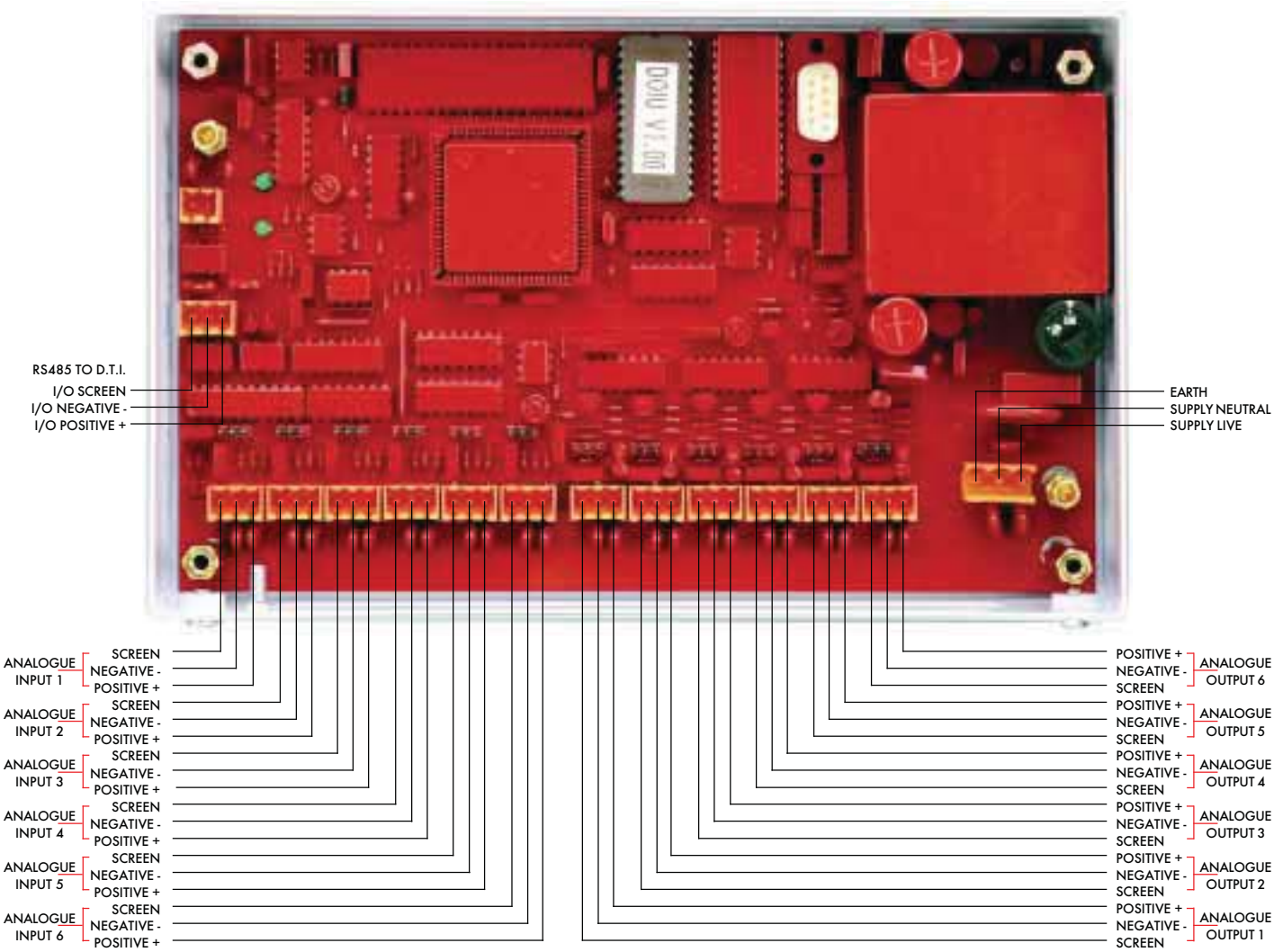

N.B. All Negative connections are common to each other.

6.14.3 Setup Configuration for direct connection to M.M. unit

SETUP

To configure the unit connect a pc serial port to the setup port (use the Autoflame I/O setup lead). The pc must be running a terminal emulation program with the transmit and receive parameters set as follows:

Baud rate:	4800
Data bits	8
Parity	none
Stop bits	1

(Check the COM port is set to the one actually being used).

Pressing the <return> key should bring up the following opening message:

Analog I/O unit setup mode

Pressing the <ESC> key at any time during setup will cause exit from setup. If no keys are pressed for a period of approximately 5 minutes the unit will automatically exit from setup and revert to normal operation. During setup the unit will not carry out its normal functions. A test mode can be invoked during set up so the operation of the inputs and outputs can be checked. Every detail of the setup is not covered here as it is very repetitive. Experience can be quickly gained by working with an actual unit in setup mode (note that during normal operation if the PC is connected textual messages are displayed indicating communication between input/output units and the DTI).

If an existing setting is to be left unchanged then just press the <return> key.

The following shows samples of the various items that can be set. Text that is displayed on the screen is shown in bold.

Present input range for analog input 1 is A 0-10 volts

Ranges available
0 - 10 volts A
0 - 20 milliamps B
4 - 20 milliamps C

Make new selection or <return>
This can be set for all 6 inputs.

Present mode of operation is with DTI
Press M to set MM mode or <return to proceed>

If DTI mode is selected, by just pressing <return> in this example, the following items are displayed (if M.M. is selected please see later in this section):

Address is currently set to 1

Press <return> or enter new address(1-10) then <return>:

The address must be set in sequence for each analog I/O unit, e.g. if there are 3 analogue I/O units on the system the first should be set address 1, the second to address 2 and the third to address 3. Conflicts will occur if addresses are not set correctly and communications issues will occur.

Input number 1:-
Present label : Analog Input 1
Enter new label : Up to 30 alpha numeric characters can be used for a label

Present low range digital value : 0
Enter new low range value : This is the low data range value, it must be in the range 0-255

Present high range digital value : 255
Enter new high range value : This is the high data range value, it must be in the range 0-255

The label, low range and high range values can be set for all 6 inputs and all 6 outputs. After the ouput 6 high range value the setup mode is exited and the following appears on the screen:

SETUP TERMINATED !

Operation will revert to normal.

If the MM mode of operation is selected then the following items are displayed

Firing rate	**A**
Required value	**B**
Actual value	**C**
Channel 1 position	**D**
Channel 2 position	**E**
Channel 3 position	**F**
Channel 4 position	**G**
MM error	**H**
EGA error	**I**
O2 value	**J**
CO2 value	**K**
CO value	**L**
NO value	**M**
SO2 value	**N**
Exhaust Temperature	**O**
Efficiency	**P**

Present selection for analogue output 1 is : A - Firing rate
Present low range value : 0
Present high range value : 100

If the <return> key is pressed the screen refreshes with the same display but for analogue output 2. If a selection is made then a low range value and a high range value are subsequently requested. The low and high range values are values at which the output ranges itself from zero to span, i.e. 0-10V or 4-20 mA. After all 6 analogue outputs have been covered the setup mode is automatically exited and the screen displays:

SETUP TERMINATED !

It must be noted that the numeric values for the low and high range do not accept decimal points. If the value normally has a decimal point then the value should be entered without the decimal point, e.g. for the channel 2 position, if the output was set to give 0-10 volts over 10.0 to 80.0 degrees then the low and high range should be entered as 100 and 800 respectively.

Configuration of M.M. when used directly with an analogue I/O unit

If an analogue I/O unit is connected directly to an M.M. to provide analogue outputs, the first analogue input may be used to set the the required setpoint. Analogue input channels 2 to 6 are of no relevance when the unit is used with an M.M.

If the required setpoint is to be set by the channel 1 input then the following options/parameters should be set on the M.M. (see section 2.14.2.4)

Option #16 = 2
Option #30 = lowest required setpoint
Option #31 = highest required setpoint
Option #33 = 1 (identification number)
Parameter #49 = 1

The channel 1 input can be configured for voltage/current as described in the earlier sections of the setup procedure.

On later versions of the analogue I/O unit software (3.01 onwards) there is an additional set up to set the type of MM connected.

Example:

RS485 port baud rate is set at 9600 (Mk6, MiniMk6, MiniMk5)
Press 4 to set to 4800 <return> to proceed.

Also on the later versions the following text is displayed when not in set up mode.

MM comms = nnn required value = nnn

M.M. comms increments each time the analogue I/O unit receives data from the M.M. Required value is the value that has been calculated for transmission back to the M.M.

Note: Sequencing/D.T.I. and analogue I/O unit cannot be used at the same time if the analogue I/O module is to be used for setpoint changes on the M.M. If the analogue I/O module is used for monitoring and standard DTI operation then all of these features are available.

6.14.4 Front Facia Layout with LED Description

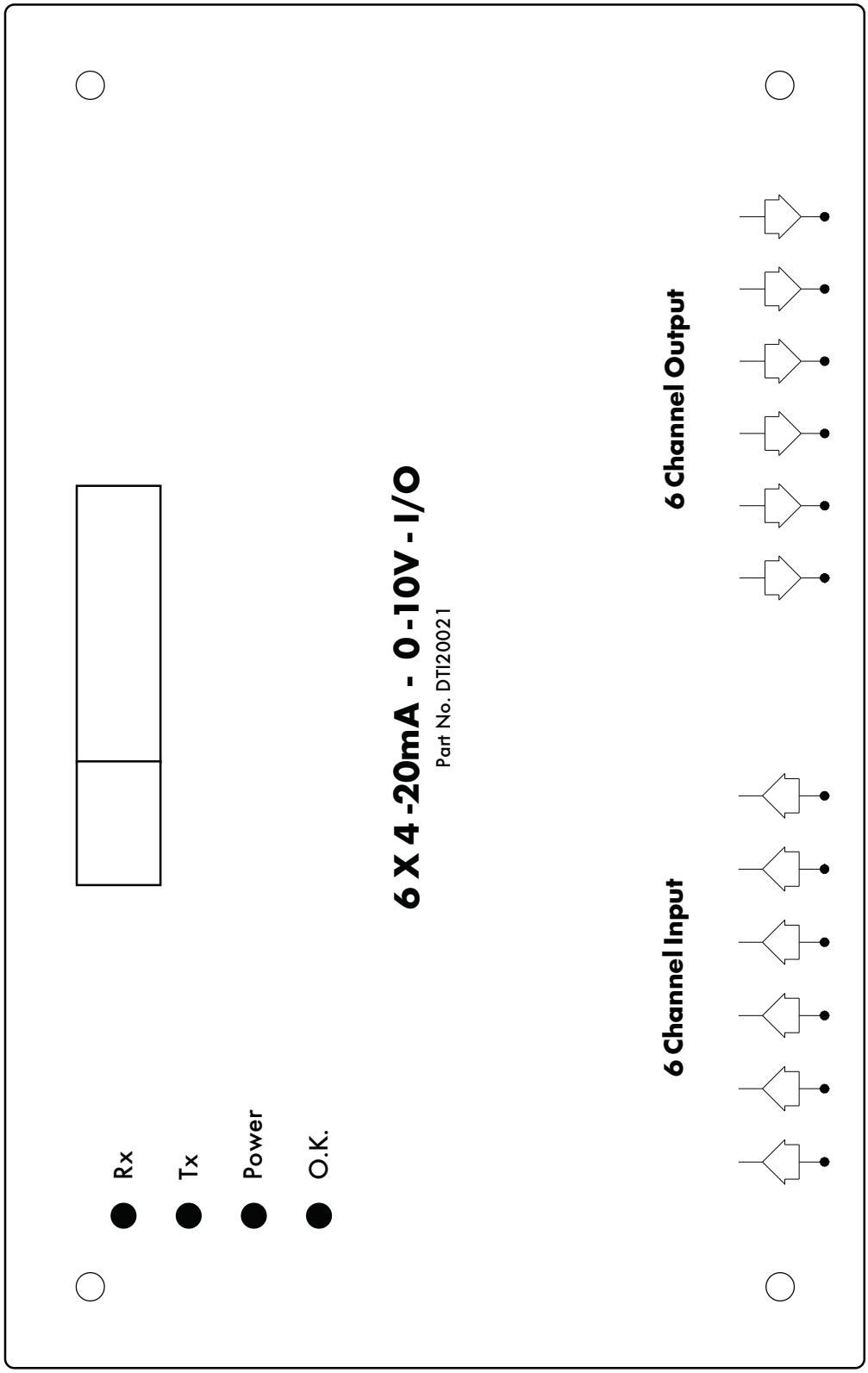

6.14.5 Fixing Holes & Dimensional Details

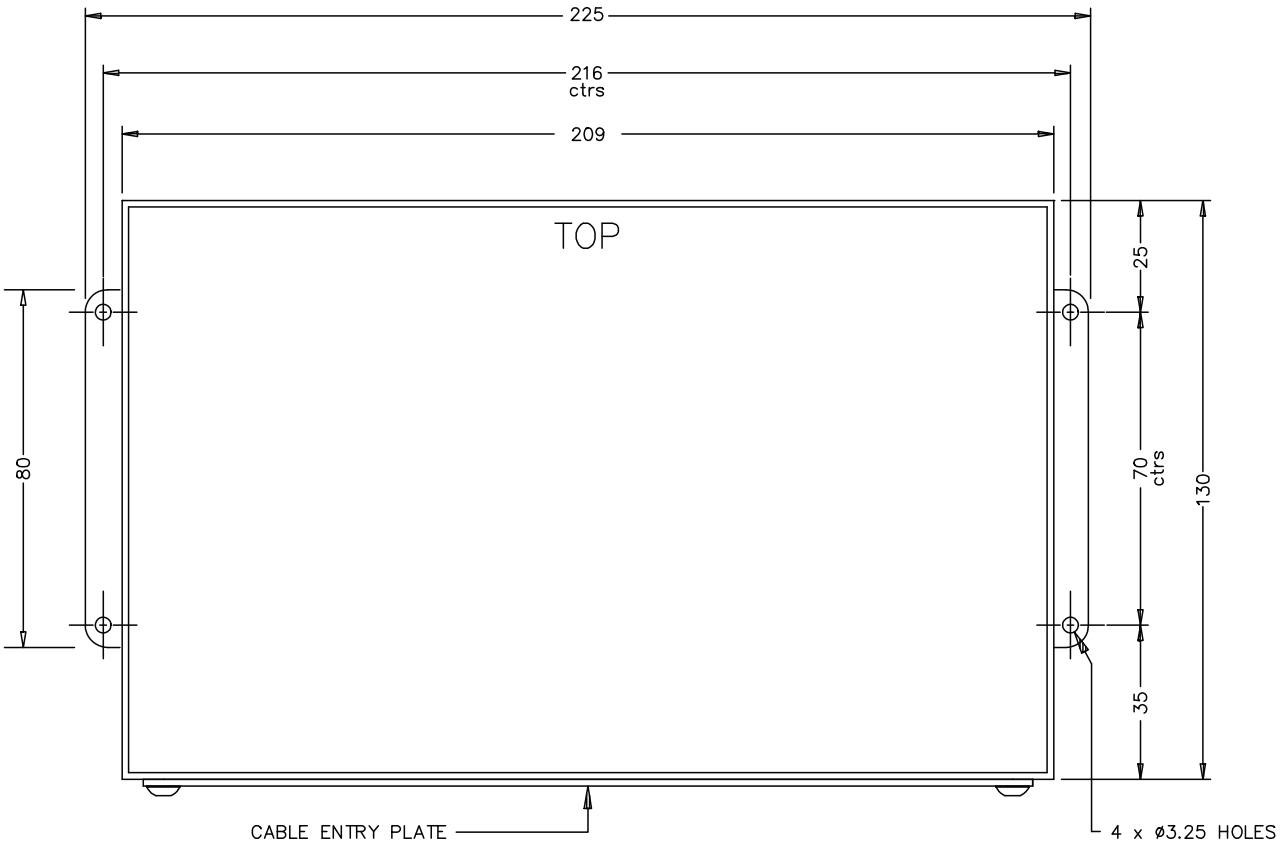

ALL DIMENSIONS IN MILLIMETRES

The depth of the unit is 38mm (1.5").
These units are back plate mounted not mounted on the front.

6.14.6 Wiring Connections Diagram

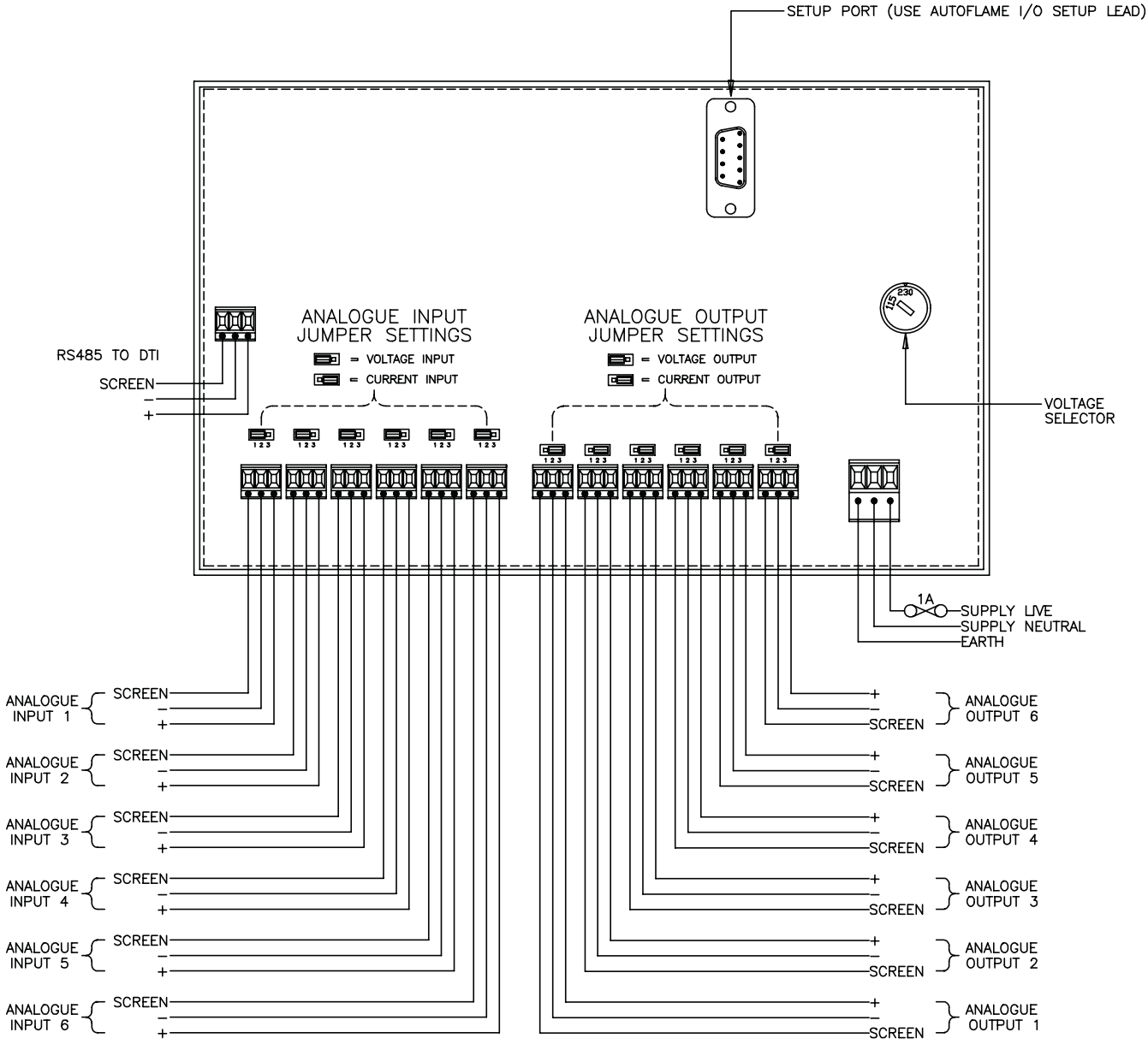

6.14.7 M.M. to Analogue Input/Output Unit Connection Diagram

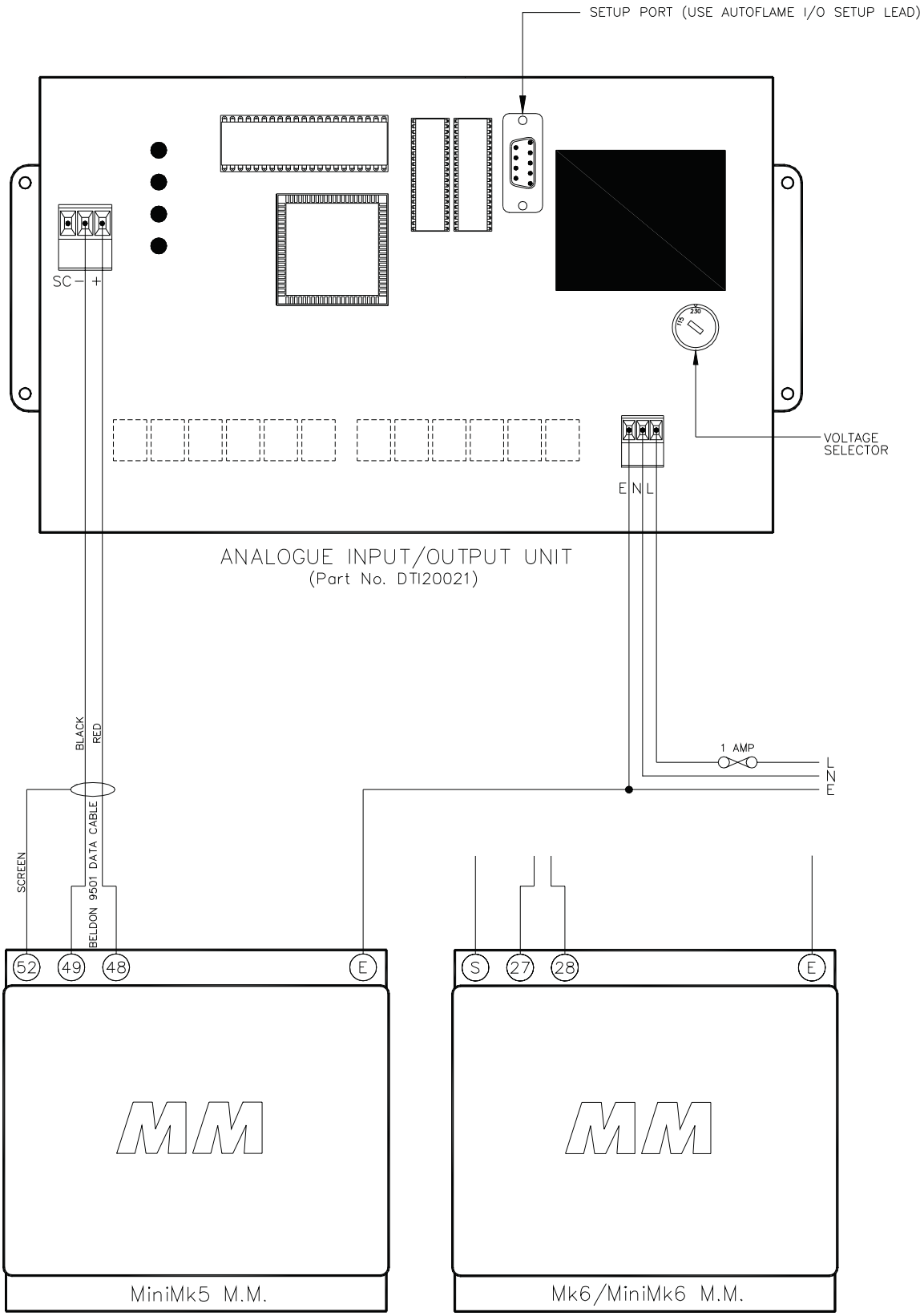

6.14.8 DTI to Analogue Input/Output Unit Connection Diagram

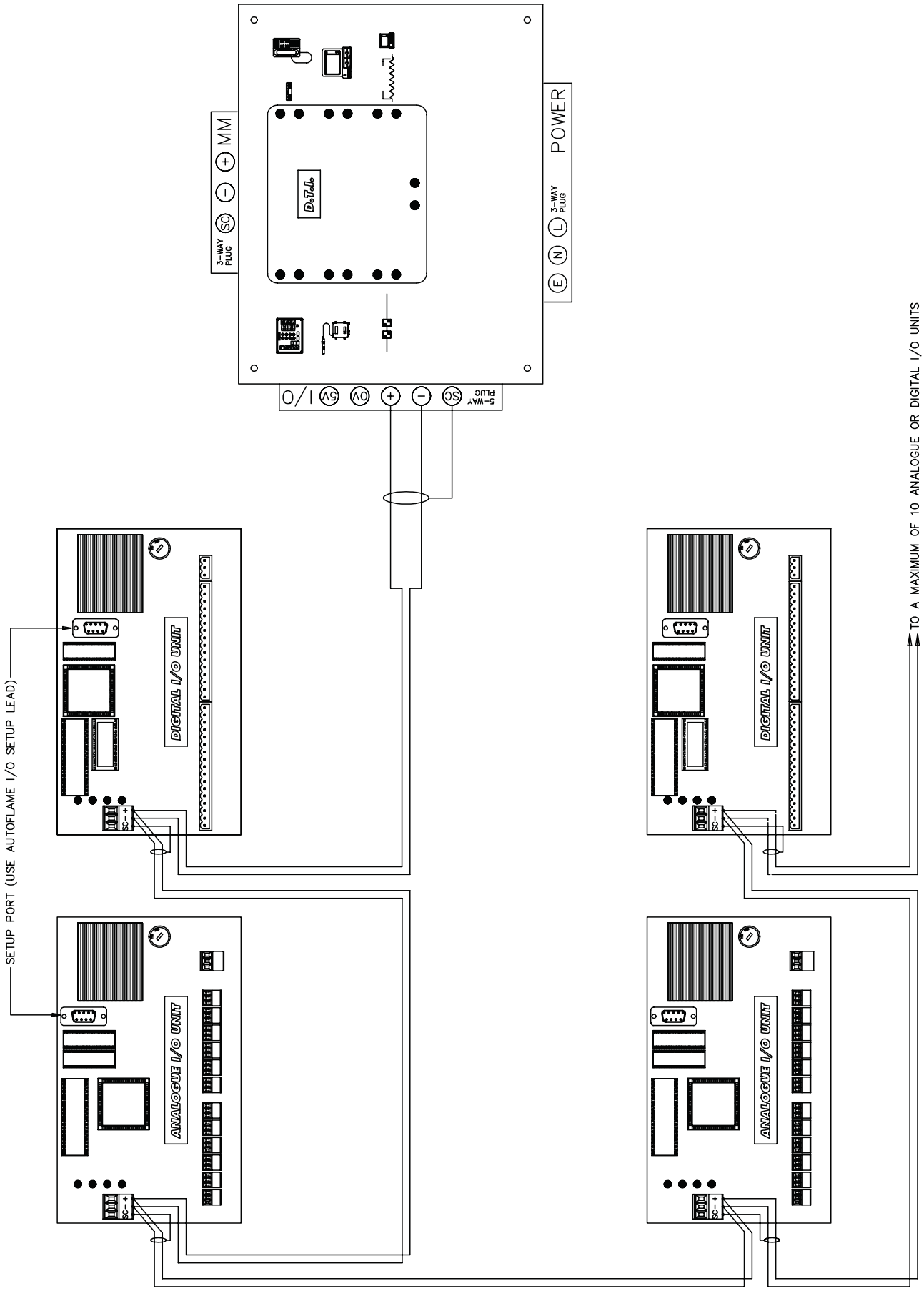

6.14.9 Application Example: M.M. unit to Analogue Input/Output Unit Direct Connection

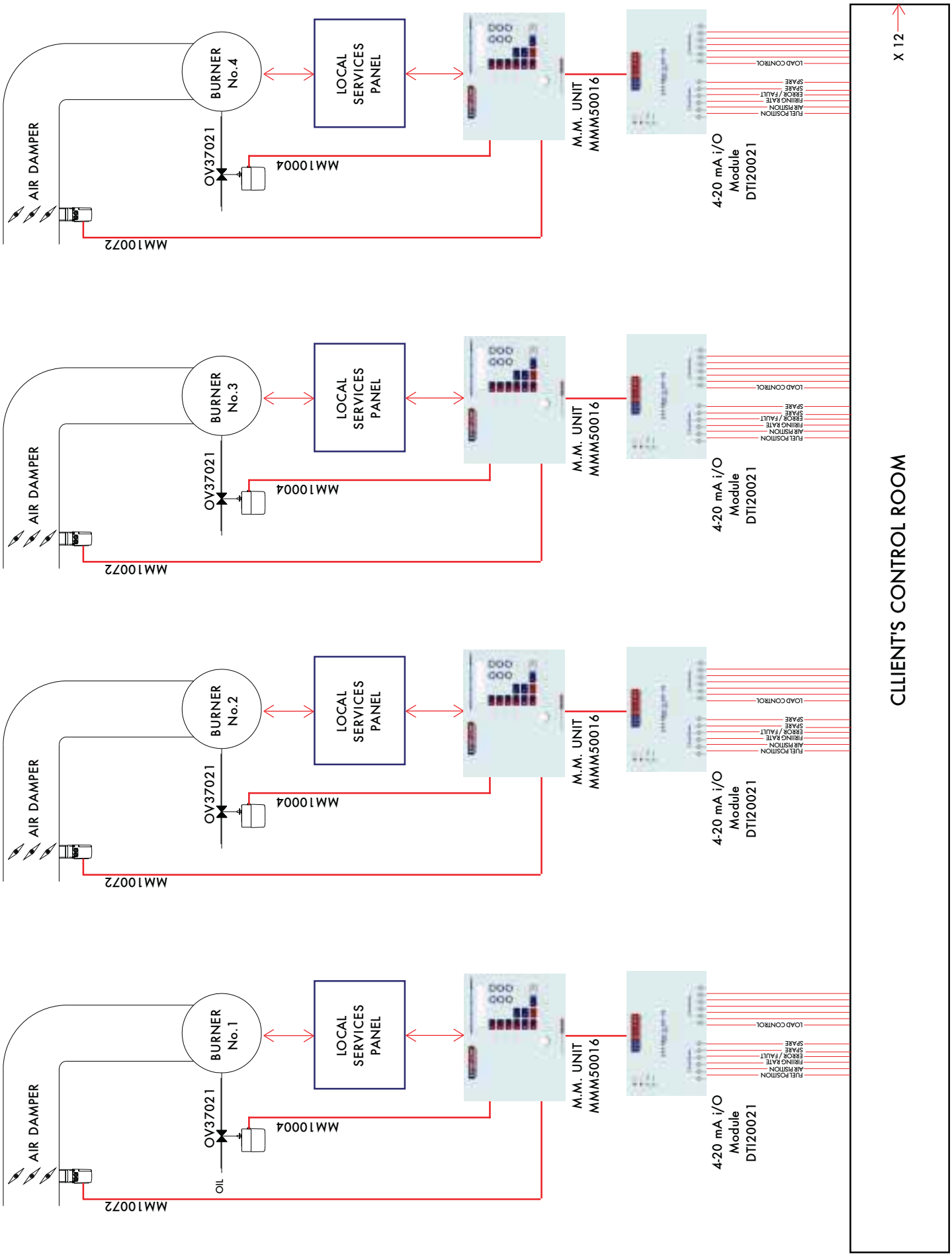

6.15.1 Introduction, Features and Benefits

Each digital I/O unit has 16 mains voltage inputs and 8 individual volt free mains voltage switches. The unit is used in conjunction with a Data Transfer Interface (DTI) unit. The mains voltage inputs can be used to wire in any alarms from the boiler house. The volt free mains voltage switches can be used to turn various components on/off. Before operation the unit must be setup for operation by means of a serial port and a personal computer (emulating a terminal). Up to 10 digital input/output units can be chained together. Text labels can also be assigned to each input and output. The latter items (data range / text labels) can be of use when the DTI is being used for a building management system or programmable logic controller type interface. It is also possible to set each of the digital inputs to simply monitor the required control signal or this can be set to alarm if the input signal is present ot not present, i.e. high or low. These alarm settings are unique for each input and also carry a time delay setting until the alarm is actually recorded. This ensures that if the signal is fluctuating, annoyance alarms are avoided.
Refer to DTI manual for interconnections between the digital I/O unit & the DTI.

6.15.2 Facia Layout and Internal Connections

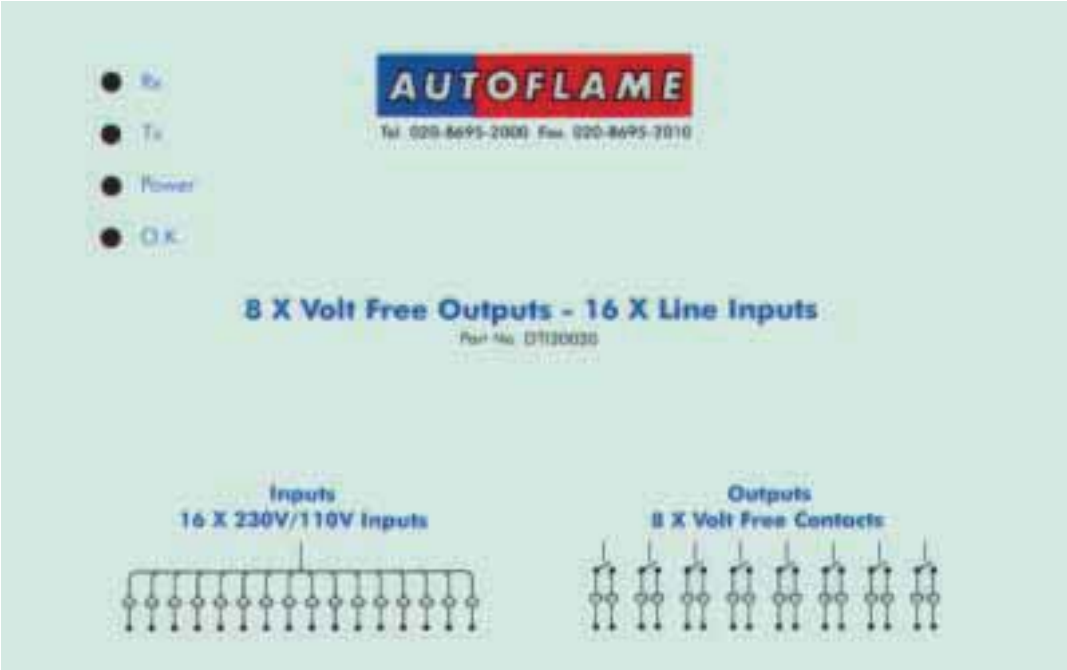

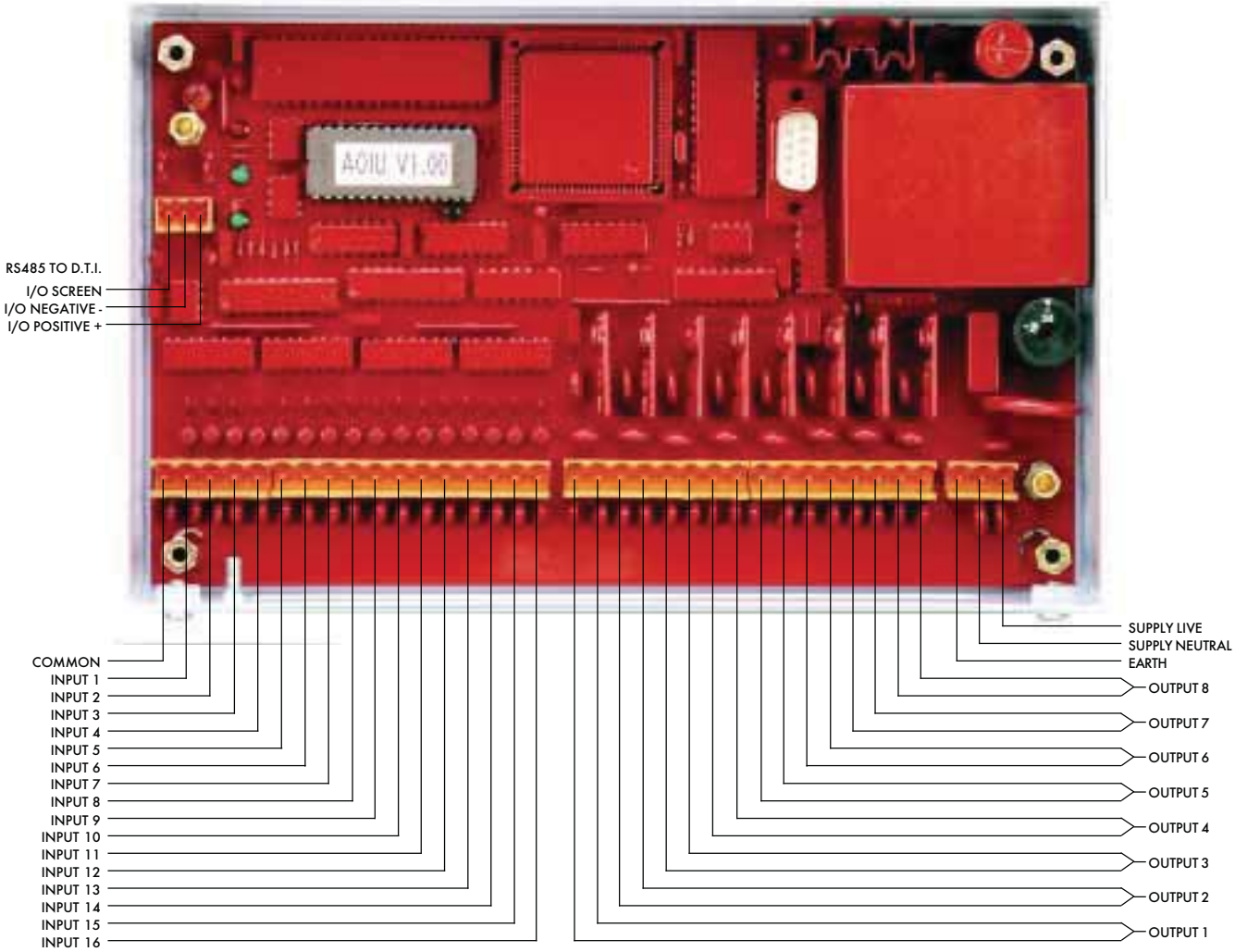

6.15.3 Setup configuration for direct connection to D.T.I. unit

To configure the unit connect a pc serial port to the setup port (use the Autoflame I/O setup lead). The pc must be running a terminal emulation program with the transmit and receive parameters set as follows:

Baud rate:	4800
Data bits	8
Parity	none
Stop bits	1

(Check the COM port is set to the one actually being used).

Pressing the <return> key should bring up the following opening message:

Digital I/O unit setup mode

Pressing the <ESC> key at any time during setup will cause exit from setup. If no keys are pressed for a period of approximately 5 minutes the unit will automatically exit from setup and revert to normal operation. During setup the unit will not carry out its normal functions. A test mode can be invoked during set up so the operation of the inputs and outputs can be checked. Every detail of the setup is not covered here as it is very repetitive. Experience can be quickly gained by working with an actual unit in setup mode. Note that during normal operation if the PC is connected textual messages are displayed indicating communication between input/output units and the DTI.

If an existing setting is to be left unchanged then just press the <return> key.

The following shows samples of the various items that can be set. Text that is displayed on the screen is shown in bold.

Address is currently set to 1

Press <return> or enter new address(1-10) then <return>:

The address must be set in sequence for each digital I/O unit, e.g. if there are 3 digital I/O units on the system the first should be set to address 1, the second to address 2 and the third to address 3. Conflicts will occur if addresses are not set correctly.

Input number 1:-
Present label : Digital Input 1
Enter new label : Up to 30 alpha numeric characters can be used for the label

Present Monitor/Alarm status is : Monitor
Enter M/A or <return to proceed>

Present Active High/Low status is : High
Enter H/L or <return> to proceed

The label, M/A status and H/L status are repeated for all 16 inputs.

Output number 1:-
Present label : Digital Output 1
Enter new label : Up to 30 alpha numeric characters can be used for the label.

The label entry is repeated for all eight outputs. After all 8 digital outputs have been covered the setup mode is automatically exited and the screen displays

SETUP TERMINATED !

6.15.4 Front Facia Layout with LED Description

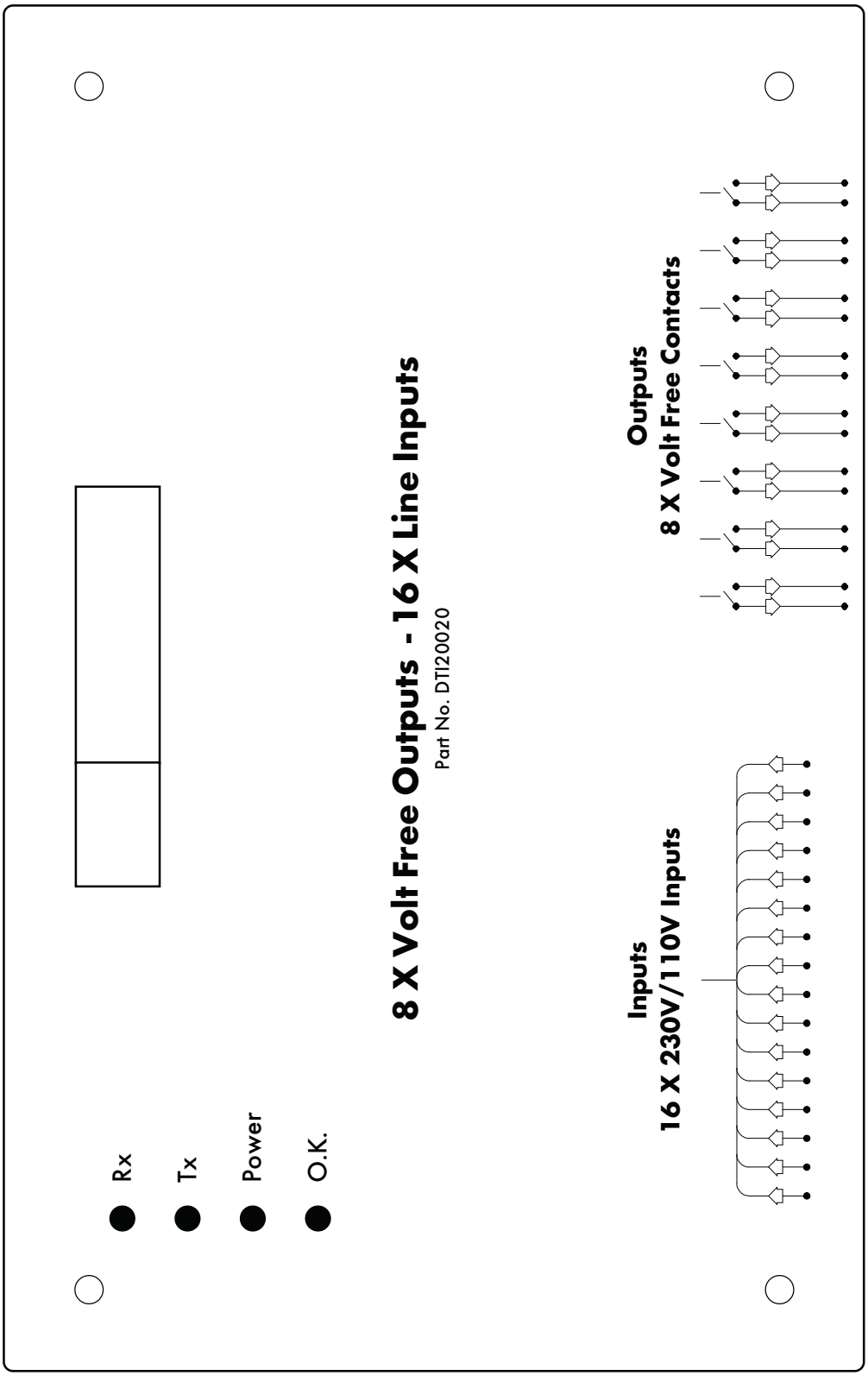

6.15.5 Fixing holes & Dimensional Details

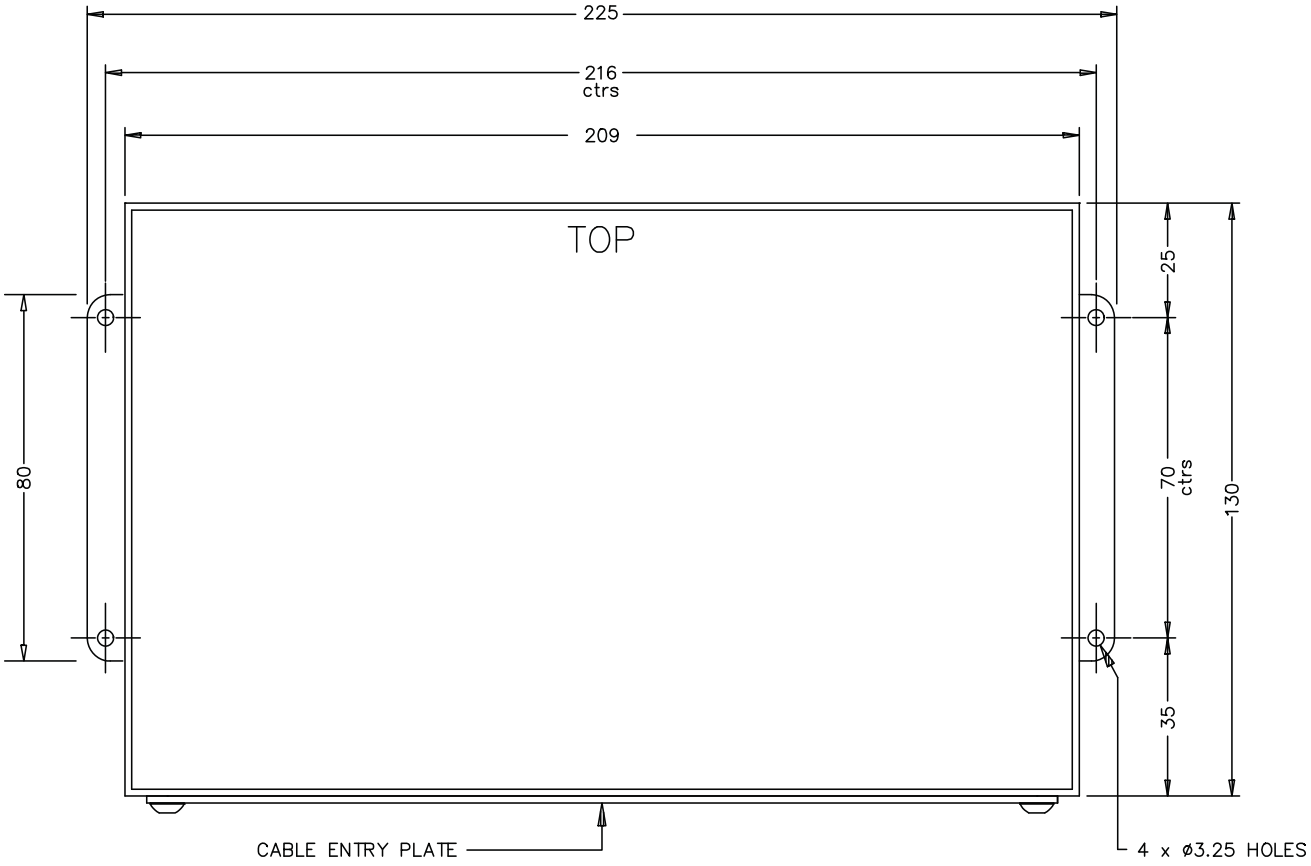

ALL DIMENSIONS IN MILLIMETRES

The depth of the unit is 38mm (1.5").
These units are back plate mounted not mounted on the front.

6.15.6 Wiring Connection Diagram

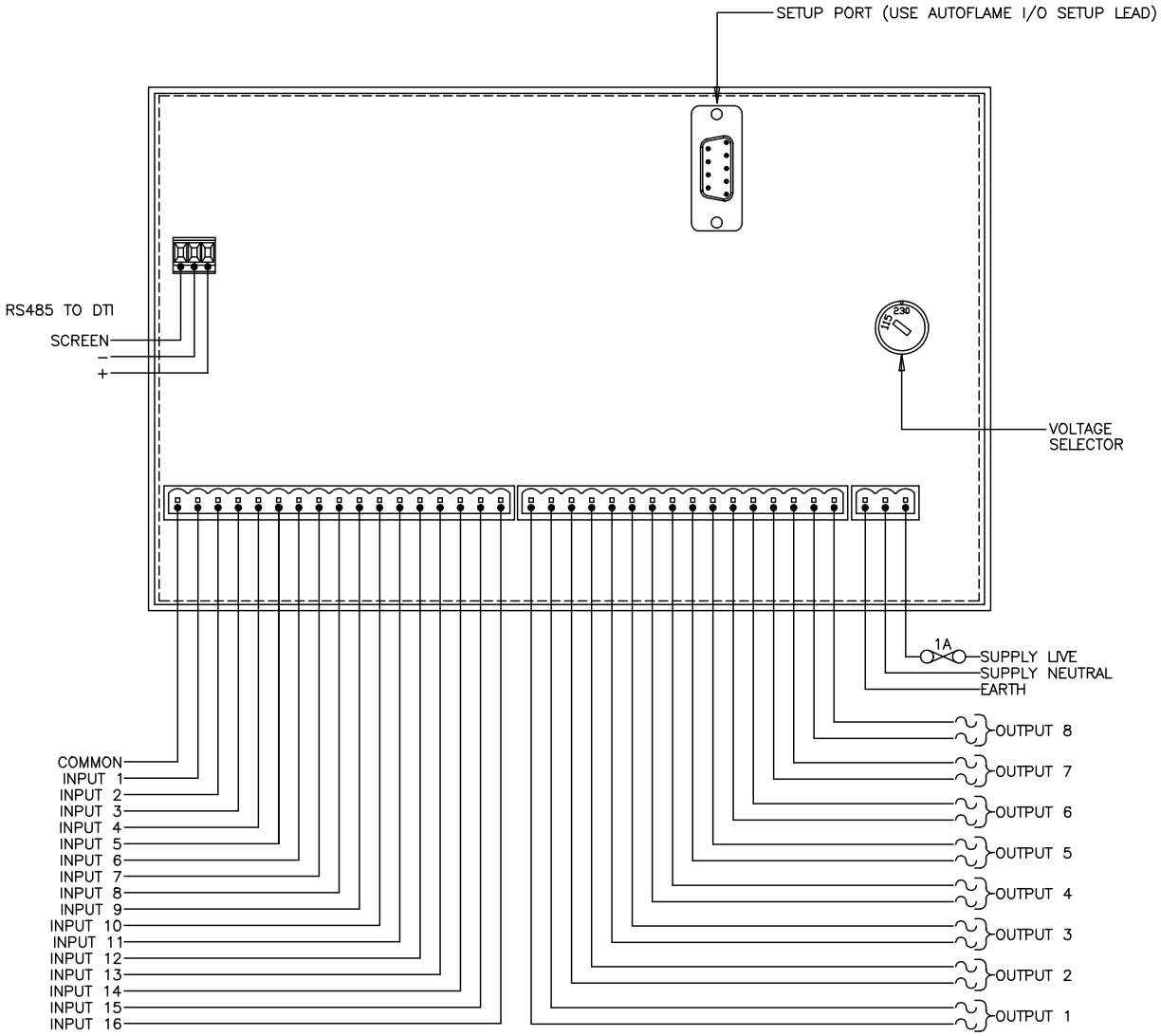

6.15.7 DTI to Digital Input/Output Unit Connection Diagram

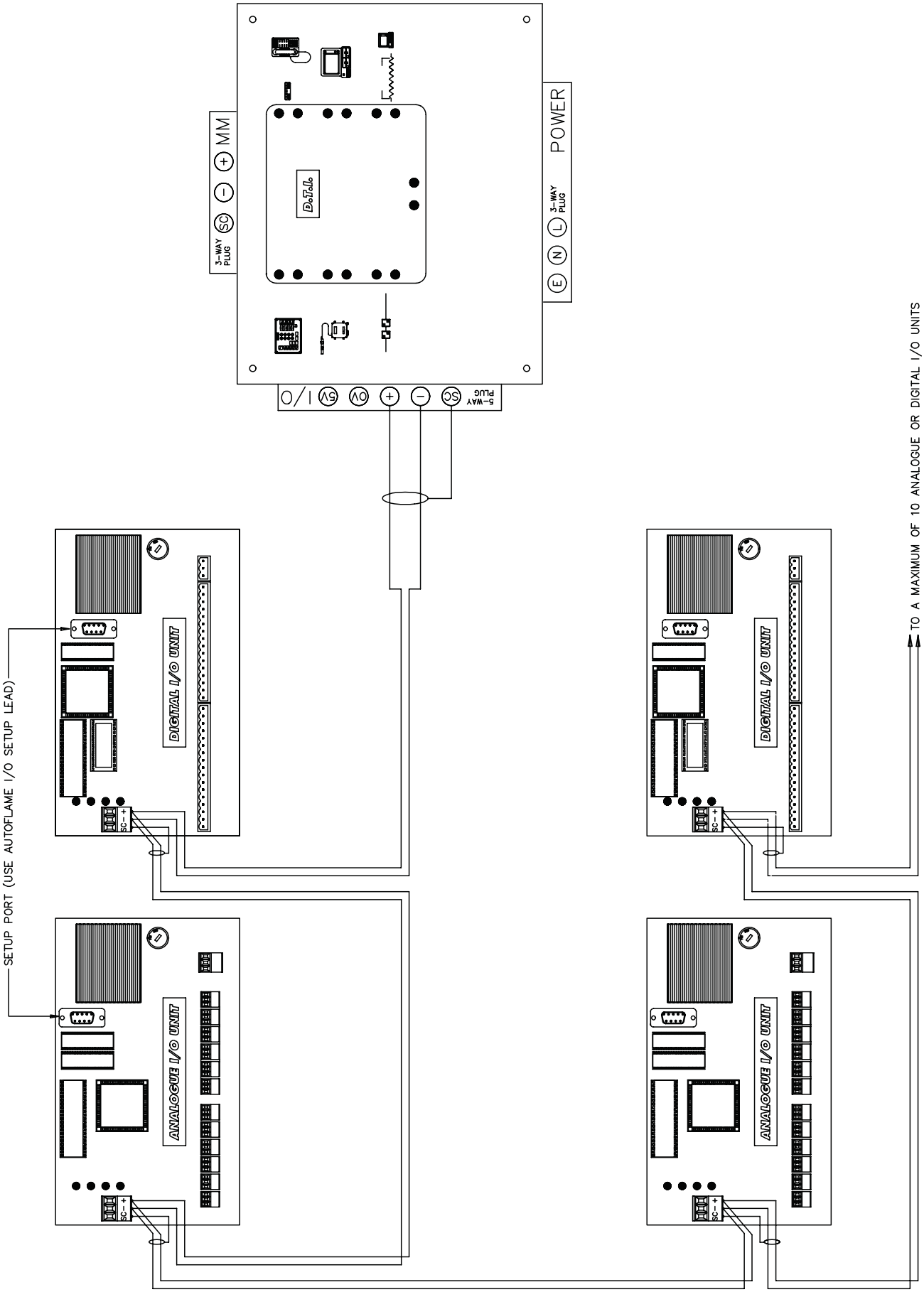

6.17.1 Overview

This manual details information regarding the Data Transfer Interface (DTI) 'Modbus' type interface. This interface allows the DTI to simultaneously communicate with the standard Autoflame Windows 95 PCDTI System.

Some knowledge of the Micro Modultion system is necessary to appreciate the meaning of the information contained within this manual.

6.17.2 0X Reference Addresses - Coils

6.17.2.1 Enable/Disable command for each MM

MM ID number		Reference Address
1		00001
2		00002
3		00003
4		00004
5		00005
6		00006
7		00007
8		00008
9		00009
10		00010

6.17.2.2 Digital I/O module output

Digital I/O Module Number		Output Number							
		1	2	3	4	5	6	7	8
1		00017	00018	00019	00020	00021	00022	00023	00024
2		00025	00026	00027	00028	00029	00030	00031	00032
3		00033	00034	00035	00036	00037	00038	00039	00040
4		00041	00042	00043	00044	00045	00046	00047	00048
5		00049	00050	00051	00052	00053	00054	00055	00056
6		00057	00058	00059	00060	00061	00062	00063	00064
7		00065	00066	00067	00068	00069	00070	00071	00072
8		00073	00074	00075	00076	00077	00078	00079	00080
9		00081	00082	00083	00084	00085	00086	00087	00088
10		00089	00090	00091	00092	00093	00094	00095	00096

6.17.3 1X Reference Addresses - Inputs

6.17.3.1 Digital Input

Digital I/O Module Number		**Input Number**							
		1	2	3	4	5	6	7	8
1		10001	10002	10003	10004	10005	10006	10007	10008
2		10017	10018	10019	10020	10021	10022	10023	10024
3		10033	10034	10035	10036	10037	10038	10039	10040
4		10049	10050	10051	10052	10053	10054	10055	10056
5		10065	10066	10067	10068	10069	10070	10071	10072
6		10081	10082	10083	10084	10085	10086	10087	10088
7		10097	10098	10099	10100	10101	10102	10103	10104
8		10113	10114	10115	10116	10117	10118	10119	10120
9		10129	10130	10131	10132	10133	10134	10135	10136
10		10145	10146	10147	10148	10149	10150	10151	10152

Digital I/O Module Number		**Input Number**							
		9	10	11	12	13	14	15	16
1		10009	10010	10011	10012	10013	10014	10015	10016
2		10025	10026	10027	10028	10029	10030	10031	10032
3		10041	10042	10043	10044	10045	10046	10047	10048
4		10057	10058	10059	10060	10061	10062	10063	10064
5		10073	10074	10075	10076	10077	10078	10079	10080
6		10089	10090	10091	10092	10093	10094	10095	10096
7		10105	10106	10107	10108	10109	10110	10111	10112
8		10121	10122	10123	10124	10125	10126	10127	10128
9		10137	10138	10139	10140	10141	10142	10143	10144
10		10153	10154	10155	10156	10157	10158	10159	10160

6.17.3.2 1X Reference Addresses - input

	MM Number				
	1	2	3	4	5
CR1 Relay Status	10193	10273	10353	10433	10513
	10194	10274	10354	10434	10514
	10195	10275	10355	10435	10515
	10196	10276	10356	10436	10516
	10197	10277	10357	10437	10517
	10198	10278	10358	10438	10518
	10199	10279	10359	10439	10519
	10200	10280	10360	10440	10520
Boiler Temp/Pressure	10201	10281	10361	10441	10521
	10202	10282	10362	10442	10522
	10203	10283	10363	10443	10523
	10204	10284	10364	10444	10524
	10205	10285	10365	10445	10525
	10206	10286	10366	10446	10526
	10207	10287	10367	10447	10527
	10208	10288	10368	10448	10528
	10209	10289	10369	10449	10529
Flow Metering On	10210	10290	10370	10450	10530
CO displayed on F2/F3	10211	10291	10371	10451	10531
	10212	10292	10372	10452	10532
C or F	10213	10293	10373	10453	10533
Bar or PSI	10214	10294	10374	10454	10534
External Voltage	10215	10295	10375	10455	10535
	10216	10296	10376	10456	10536
EGA Optioned	10217	10297	10377	10457	10537
Actual up to Trim Threshold	10218	10298	10378	10458	10538
Cooler Ready	10219	10299	10379	10459	10539
Ambient Temp OK	10220	10300	10380	10460	10540
NO optioned	10221	10301	10381	10461	10541
SO2 optioned	10222	10302	10382	10462	10542
Temp HI/LO	10223	10303	10383	10463	10543
OK to sample	10224	10304	10384	10464	10544
Sequencing optioned	10225	10305	10385	10465	10545
Setpoint/Enable Accepted	10226	10306	10386	10466	10546
	10227	10307	10387	10467	10547
	10228	10308	10388	10468	10548
	10229	10309	10389	10469	10549
	10230	10310	10390	10470	10550
	10231	10311	10391	10471	10551
	10232	10312	10392	10472	10552

Addresses with no detailed function are unused.

1X Reference Addressees - inputs

	MM Number				
	1	2	3	4	5
Hand Operation	10233	10313	10393	10473	10553
Low Flame Hold	10234	10314	10394	10474	10554
	10235	10315	10395	10475	10555
	10236	10316	10396	10476	10556
	10237	10317	10397	10477	10557
	10238	10318	10398	10478	10558
MM working COMMS	10239	10319	10399	10479	10559
Input 41 status	10240	10320	10400	10480	10560
Lead boiler status	10241	10321	10401	10481	10561
Disabled status	10242	10322	10402	10482	10562
	10243	10323	10403	10483	10563
	10244	10324	10404	10484	10564
	10245	10325	10405	10485	10565
	10246	10326	10406	10486	10566
	10247	10327	10407	10487	10567
	10248	10328	10408	10488	10568
Slave burner left/right	10249	10329	10409	10489	10569
	10250	10330	10410	10490	10570
	10251	10331	10411	10491	10571
	10252	10332	10412	10492	10572
	10253	10333	10413	10493	10573
	10254	10334	10414	10494	10574
	10255	10335	10415	10495	10575
	10256	10336	10416	10496	10576
	10257	10337	10417	10497	10577
	10258	10338	10418	10498	10578
	10259	10339	10419	10499	10579
	10260	10340	10420	10500	10580
	10261	10341	10421	10501	10581
	10262	10342	10422	10502	10582
	10263	10343	10423	10503	10583
	10264	10344	10424	10504	10584
	10265	10345	10425	10505	10585
	10266	10346	10426	10506	10586
	10267	10347	10427	10507	10587
	10268	10348	10428	10508	10588
	10269	10349	10429	10509	10589
	10270	10350	10430	10510	10590
	10271	10351	10431	10511	10591
	10272	10352	10432	10512	10592

Addresses with no detailed function are unused.

1X Reference Addresses - inputs

	MM Number				
	6	7	8	9	10
CR1 Relay Status	10593	10673	10753	10833	10913
	10594	10674	10754	10834	10914
	10595	10675	10755	10835	10915
	10596	10676	10756	10836	10916
	10597	10677	10757	10837	10917
	10598	10678	10758	10838	10918
	10599	10679	10759	10839	10919
	10600	10680	10760	10840	10920
Boiler Temp/Pressure	10601	10681	10761	10841	10921
	10602	10682	10762	10842	10922
	10603	10683	10763	10843	10923
	10604	10684	10764	10844	10924
	10605	10685	10765	10845	10925
	10606	10686	10766	10846	10926
	10607	10687	10767	10847	10927
	10608	10688	10768	10848	10928
	10609	10689	10769	10849	10929
Flow Metering On	10610	10690	10770	10850	10930
CO displayed on F2/F3	10611	10691	10771	10851	10931
	10612	10692	10772	10852	10932
C or F	10613	10693	10773	10853	10933
Bar or PSI	10614	10694	10774	10854	10934
External Voltage	10615	10695	10775	10855	10935
	10616	10696	10776	10856	10936
EGA Optioned	10617	10697	10777	10857	10937
Actual up to Trim Threshold	10618	10698	10778	10858	10938
Cooler Ready	10619	10699	10779	10859	10939
Ambient Temp OK	10620	10700	10780	10860	10940
NO optioned	10621	10701	10781	10861	10941
SO2 optioned	10622	10702	10782	10862	10942
Temp HI/LO	10623	10703	10783	10863	10943
OK to sample	10624	10704	10784	10864	10944
Sequencing optioned	10625	10705	10785	10865	10945
Setpoint/Enable Accepted	10626	10706	10786	10866	10946
	10627	10707	10787	10867	10947
	10628	10708	10788	10868	10948
	10629	10709	10789	10869	10949
	10630	10710	10790	10870	10950
	10631	10711	10791	10871	10951
	10632	10712	10792	10872	10952

Addresses with no detailed function are unused.

1X Reference Addresses - inputs

	MM Number				
	6	7	8	9	10
Hand Operation	10633	10713	10793	10873	10953
Low Flame Hold	10634	10714	10794	10874	10954
	10635	10715	10795	10875	10955
	10636	10716	10796	10876	10956
	10637	10717	10797	10877	10957
	10638	10718	10798	10878	10958
MM working COMMS	10639	10719	10799	10879	10959
Input 41 status	10640	10720	10800	10880	10960
Lead boiler status	10641	10721	10801	10881	10961
Disabled status	10642	10722	10802	10882	10962
	10643	10723	10803	10883	10963
	10644	10724	10804	10884	10964
	10645	10725	10805	10885	10965
	10646	10726	10806	10886	10966
	10647	10727	10807	10887	10967
	10648	10728	10808	10888	10968
Slave burner left/right	10649	10729	10809	10889	10969
	10650	10730	10810	10890	10970
	10651	10731	10811	10891	10971
	10652	10732	10812	10892	10972
	10653	10733	10813	10893	10973
	10654	10734	10814	10894	10974
	10655	10735	10815	10895	10975
	10656	10736	10816	10896	10976
	10657	10737	10817	10897	10977
	10658	10738	10818	10898	10978
	10659	10739	10819	10899	10979
	10660	10740	10820	10900	10980
	10661	10741	10821	10901	10981
	10662	10742	10822	10902	10982
	10663	10743	10823	10903	10983
	10664	10744	10824	10904	10984
	10665	10745	10825	10905	10985
	10666	10746	10826	10906	10986
	10667	10747	10827	10907	10987
	10668	10748	10828	10908	10988
	10669	10749	10829	10909	10989
	10670	10750	10830	10910	10990
	10671	10751	10831	10911	10991
	10672	10752	10832	10912	10992

Addresses with no detailed function are unused.

1X Reference Addresses - inputs

The information on this page is only relevant to standalone EGAs connected directly to the DTI via the EGA port

	EGA Number				
	1	2	3	4	5
Air Calibration in progress	10993	11009	11025	11041	11057
Gas Calibration in progress	10994	11010	11026	11042	11058
Cooler ready	10995	11011	11027	11043	11059
Ambient temperature OK	10996	11012	11028	11044	11060
Ambient temperature HIGH	10997	11013	11029	11045	11061
Ambient temperature LOW	10998	11014	11030	11046	11062
	10999	11015	11031	11047	11063
EGA ready	11000	11016	11032	11048	11064
CO optioned	11001	11017	11033	11049	11065
NO optioned	11002	11018	11034	11050	11066
SO2 optioned	11003	11019	11035	11051	11067
°C(0) or °F(1) optioned	11004	11020	11036	11052	11068
Sampling optioned	11005	11021	11037	11053	11069
2nd thermocouple optioned	11006	11022	11038	11054	11070
Voltage input optioned	11007	11023	11039	11055	11071
	11008	11024	11040	11056	11072

	EGA Number				
	6	7	8	9	10
Air Calibration in progress	11073	11089	11105	11121	11137
Gas Calibration in progress	11074	11090	11106	11122	11138
Cooler ready	11075	11091	11107	11123	11139
Ambient temperature OK	11076	11092	11108	11124	11140
Ambient temperature HIGH	11077	11093	11109	11125	11141
Ambient temperature LOW	11078	11094	11110	11126	11142
	11079	11095	11111	11127	11143
EGA ready	11080	11096	11112	11128	11144
CO optioned	11081	11097	11113	11129	11145
NO optioned	11082	11098	11114	11130	11146
SO2 optioned	11083	11099	11115	11131	11147
°C(0) or °F(1) optioned	11084	11100	11116	11132	11148
Sampling optioned	11085	11101	11117	11133	11149
2nd thermocouple optioned	11086	11102	11118	11134	11150
Voltage input optioned	11087	11103	11119	11135	11151
	11088	11104	11120	11136	11152

1X Reference Addresses - On line/Off line Status

In all cases, off line is indicated by 0, on line by 1.

MM No.	Reference Address
1	11793
2	11794
3	11795
4	11796
5	11797
6	11798
7	11799
8	11800
9	11801
10	11802

EGA No.	Reference Address
1	11809
2	11810
3	11811
4	11812
5	11813
6	11814
7	11815
8	11816
9	11817
10	11818

Digital I/O No.	Reference Address
1	11825
2	11826
3	11827
4	11828
5	11829
6	11830
7	11831
8	11832
9	11833
10	11834

Analogue I/O No.	Reference Address
1	11841
2	11842
3	11843
4	11844
5	11845
6	11846
7	11847
8	11848
9	11849
10	11850

1X Reference Addresses- Water Level

	MM Number				
	1	2	3	4	5
Water level optioned- no(0)/yes(1)	12001	12201	12401	12601	12801
Units- imperial(0)/metric(1)	12002	12202	12402	12602	12802
Feed water pump- off(0)/on(1)	12003	12203	12403	12603	12803
TDS units- ppm(0)/uSiemens(1)	12004	12204	12404	12604	12804
WL ready- no(0)/yes(1)	12005	12205	12405	12605	12805
TDS optioned- no(0)/yes(1)	12006	12206	12406	12606	12806
First out 1- normal(0)/fail(1)	12009	12209	12409	12609	12809
First out 2- normal(0)/fail(1)	12010	12210	12410	12610	12810
First out 3- normal(0)/fail(1)	12011	12211	12411	12611	12811
First out 4- normal(0)/fail(1)	12012	12212	12412	12612	12812
First out 5- normal(0)/fail(1)	12013	12213	12413	12613	12813
First out 6- normal(0)/fail(1)	12014	12214	12414	12614	12814
First out 7- normal(0)/fail(1)	12015	12215	12415	12615	12815
First out 8- normal(0)/fail(1)	12016	12216	12416	12616	12816
First out 9- normal(0)/fail(1)	12017	12217	12417	12617	12817
First out 10- normal(0)/fail(1)	12018	12218	12418	12618	12818
First out 11- normal(0)/fail(1)	12019	12219	12419	12619	12819
First out 12- normal(0)/fail(1)	12020	12220	12420	12620	12820
First out 13- normal(0)/fail(1)	12021	12221	12421	12621	12821
First out 14- normal(0)/fail(1)	12022	12222	12422	12622	12822
First out 15- normal(0)/fail(1)	12023	12223	12423	12623	12823

	MM Number				
	6	7	8	9	10
Water level optioned- no(0)/yes(1)	13001	13201	13401	13601	13801
Units- imperial(0)/metric(1)	13002	13202	13402	13602	13802
Feed water pump- off(0)/on(1)	13003	13203	13403	13603	13803
TDS units- ppm(0)/uSiemens(1)	13004	13204	13404	13604	13804
WL ready- no(0)/yes(1)	13005	13205	13405	13605	13805
TDS optioned- no(0)/yes(1)	13006	13206	13406	13606	13806
First out 1- normal(0)/fail(1)	13009	13209	13409	13609	13809
First out 2- normal(0)/fail(1)	13010	13210	13410	13610	13810
First out 3- normal(0)/fail(1)	13011	13211	13411	13611	13811
First out 4- normal(0)/fail(1)	13012	13212	13412	13612	13812
First out 5- normal(0)/fail(1)	13013	13213	13413	13613	13813
First out 6- normal(0)/fail(1)	13014	13214	13414	13614	13814
First out 7- normal(0)/fail(1)	13015	13215	13415	13615	13815
First out 8- normal(0)/fail(1)	13016	13216	13416	13616	13816
First out 9- normal(0)/fail(1)	13017	13217	13417	13617	13817
First out 10- normal(0)/fail(1)	13018	13218	13418	13618	13818
First out 11- normal(0)/fail(1)	13019	13219	13419	13619	13819
First out 12- normal(0)/fail(1)	13020	13220	13420	13620	13820
First out 13- normal(0)/fail(1)	13021	13221	13421	13621	13821
First out 14- normal(0)/fail(1)	13022	13222	13422	13622	13822
First out 15- normal(0)/fail(1)	13023	13223	13423	13623	13823

6.17.4 3X Reference Addresses - Input Registers

Analog Inputs

Analogue I/O Module Number		**Input Number**					
		1	2	3	4	5	6
1		30017	30018	30019	30020	30021	30022
2		30025	30026	30027	30028	30029	30030
3		30033	30034	30035	30036	30037	30038
4		30041	30042	30043	30044	30045	30046
5		30049	30050	30051	30052	30053	30054
6		30057	30058	30059	30060	30061	30062
7		30065	30066	30067	30068	30069	30070
8		30073	30074	30075	30076	30077	30078
9		30081	30082	30083	30084	30085	30086
10		30089	30090	30091	30092	30093	30094

Software Version

30097 Software Version Number
30098 Software Issue Number

3X Reference Addresses - Input Registers

	MM Number				
	1	2	3	4	5
Load index	30101	30151	30201	30251	30301
Startup/firing status	30102	30152	30202	30252	30302
Sequence status	30103	30153	30203	30253	30303
Burner rating	30104	30154	30204	30254	30304
Actual value	30105	30155	30205	30255	30305
Required value	30106	30156	30206	30256	30306
Fuel selected	30107	30157	30207	30257	30307
Number of channels	30108	30158	30208	30258	30308
Channel 1 position	30109	30159	30209	30259	30309
Channel 2 position	30110	30160	30210	30260	30310
Channel 3 position	30111	30161	30211	30261	30311
Channel 4 position	30112	30162	30212	30262	30312
MM error number	30113	30163	30213	30263	30313
Single/twin operation	30114	30164	30214	30264	30314
Run O2	30115	30165	30215	30265	30315
Run CO2	30116	30166	30216	30266	30316
Run CO	30117	30167	30217	30267	30317
Run exhaust temperature	30118	30168	30218	30268	30318
Run efficiency	30119	30169	30219	30269	30319
Run NO	30120	30170	30220	30270	30320
Run SO2	30121	30171	30221	30271	30321
Comm. O2	30122	30172	30222	30272	30322
Comm. CO2	30123	30173	30223	30273	30323
Comm. CO	30124	30174	30224	30274	30324
Comm. Exhaust temperature	30125	30175	30225	30275	30325
Comm. Efficiency	30126	30176	30226	30276	30326
Comm. NO	30127	30177	30227	30277	30327
Comm. SO2	30128	30178	30228	30278	30328
EGA error number	30129	30179	30229	30279	30329
Minimum required value	30130	30180	30230	30280	30330
Maximum required value	30131	30181	30231	30281	30331
Present flow units	30132	30182	30232	30282	30332
Present flow thousands	30133	30183	30233	30283	30333
Fuel 1 flow total units	30134	30184	30234	30284	30334
Fuel 1 flow total thousands	30135	30185	30235	30285	30335
Fuel 1 flow total millions	30136	30186	30236	30286	30336
Fuel 2 flow total units	30137	30187	30237	30287	30337
Fuel 2 flow total thousands	30138	30188	30238	30288	30338
Fuel 2 flow total millions	30139	30189	30239	30289	30339
Fuel 3 flow total units	30140	30190	30240	30290	30340
Fuel 3 flow total thousands	30141	30191	30241	30291	30341
Fuel 3 flow total millions	30142	30192	30242	30292	30342
Run ambient	30143	30193	30243	30293	30343
Run delta T	30144	30194	30244	30294	30344
COM ambient	30145	30195	30245	30295	30345
COM delta T	30146	30196	30246	30296	30346
Mk6/Mini6/Mini5 (0,4,5)	30147	30197	30247	30297	30347

3X Reference Addresses - Input Registers

	MM Number				
	6	7	8	9	10
Load index	30351	30401	30451	30501	30551
Startup/firing status	30352	30402	30452	30502	30552
Sequence status	30353	30403	30453	30503	30553
Boiler capacity	30354	30404	30454	30504	30554
Actual value	30355	30405	30455	30505	30555
Required value	30356	30406	30456	30506	30556
Fuel selected	30357	30407	30457	30507	30557
Number of channels	30358	30408	30458	30508	30558
Channel 1 position	30359	30409	30459	30509	30559
Channel 2 position	30360	30410	30460	30510	30560
Channel 3 position	30361	30411	30461	30511	30561
Channel 4 position	30362	30412	30462	30512	30562
MM error number	30363	30413	30463	30513	30563
Single/twin operation	30364	30414	30464	30514	30564
Run O2	30365	30415	30465	30515	30565
Run CO2	30366	30416	30466	30516	30566
Run CO	30367	30417	30467	30517	30567
Run exhaust temperature	30368	30418	30468	30518	30568
Run efficiency	30369	30419	30469	30519	30569
Run NO	30370	30420	30470	30520	30570
Run SO2	30371	30421	30471	30521	30571
Comm. O2	30372	30422	30472	30522	30572
Comm. CO2	30373	30423	30473	30523	30573
Comm. CO	30374	30424	30474	30524	30574
Comm. Exhaust temperature	30375	30425	30475	30525	30575
Comm. Efficiency	30376	30426	30476	30526	30576
Comm. NO	30377	30427	30477	30527	30577
Comm. SO2	30378	30428	30478	30528	30578
EGA error number	30379	30429	30479	30529	30579
Minimum required value	30380	30430	30480	30530	30580
Maximum required value	30381	30431	30481	30531	30581
Present flow units	30382	30432	30482	30532	30582
Present flow thousands	30383	30433	30483	30533	30583
Fuel 1 flow total units	30384	30434	30484	30534	30584
Fuel 1 flow total thousands	30385	30435	30485	30535	30585
Fuel 1 flow total millions	30386	30436	30486	30536	30586
Fuel 2 flow total units	30387	30437	30487	30537	30587
Fuel 2 flow total thousands	30388	30438	30488	30538	30588
Fuel 2 flow total millions	30389	30439	30489	30539	30589
Fuel 3 flow total units	30390	30440	30490	30540	30590
Fuel 3 flow total thousands	30391	30441	30491	30541	30591
Fuel 3 flow total millions	30392	30442	30492	30542	30592
Run ambient	30393	30443	30493	30543	30593
Run delta T	30394	30444	30494	30544	30594
COM ambient	30395	30445	30495	30545	30595
COM delta T	30396	30446	30496	30546	30596
Mk6/Mini6/Mini5 (0,4,5)	30397	30447	30497	30547	30597

3X Reference Addresses - Input Registers

	MM Number				
	1	2	3	4	5
Fuel 4 flow total units	30801	30851	30901	30951	31001
Fuel 4 flow total thousands	30802	30852	30902	30952	31002
Fuel 4 flow total millions	30803	30853	30903	30953	31003
Channel 5 output 0-255	30804	30854	30904	30954	31004
Channel 5 input 0-255	30805	30855	30905	30955	31005
Channel 6 output 0-255	30806	30856	30906	30956	31006
Channel 6 input 0-255	30807	30857	30907	30957	31007
Option 1	30808	30858	30908	30958	31008
Option 77	30809	30859	30909	30959	31009
Option 90	30810	30860	30910	30960	31010
Option 91	30811	30861	30911	30961	31011
Option 92	30812	30862	30912	30962	31012
Option 93	30813	30863	30913	30963	31013
Option 94	30814	30864	30914	30964	31014
Option 95	30815	30865	30915	30965	31015
Option 96	30816	30866	30916	30966	31016
Option 97	30817	30867	30917	30967	31017
Option 98	30818	30868	30918	30968	31018
Option 99	30819	30869	30919	30969	31019
Option 100	30820	30870	30920	30970	31020
Option 101	30821	30871	30921	30971	31021
Option 102	30822	30872	30922	30972	31022
Option 103	30823	30873	30923	30973	31023
Option 104	30824	30874	30924	30974	31024
Option 105	30825	30875	30925	30975	31025
Option 106	30826	30876	30926	30976	31026
Option 107	30827	30877	30927	30977	31027
Option 108	30828	30878	30928	30978	31028
Option 109	30829	30879	30929	30979	31029
Lockout code	30830	30880	30930	30980	31030
Option 71 fuel 1 type	30831	30881	30931	30981	31031
Option 72 fuel 2 type	30832	30882	30932	30982	31032
Option 73 fuel 3 type	30833	30883	30933	30983	31033
Option 74 fuel 4 type	30834	30884	30934	30984	31034
Option 61 flow units fuel 1	30835	30885	30935	30985	31035
Option 62 flow units fuel 2	30836	30886	30936	30986	31036
Option 63 flow units fuel 3	30837	30887	30937	30987	31037
Option 64 flow units fuel 4	30838	30888	30938	30988	31038
Fuel 1 hours run	30839	30889	30939	30989	31039
Fuel 2 hours run	30840	30890	30940	30990	31040
Fuel 3 hours run	30841	30891	30941	30991	31041
Fuel 4 hours run	30842	30892	30942	30992	31042
Fuel 1 start ups	30843	30893	30943	30993	31043
Fuel 2 start ups	30844	30894	30944	30994	31044
Fuel 3 start ups	30845	30895	30945	30995	31045
Fuel 4 start ups	30846	30896	30946	30996	31046
Air pressure	30847	30897	30947	30997	31047
Air pressure coding	30848	30898	30948	30998	31048
Gas pressure	30849	30899	30949	30999	31049
Gas pressure coding	30850	30900	30950	31000	31050

3X Reference Addresses - Input Registers

	MM Number				
	6	7	8	9	10
Fuel 4 flow total units	31051	31101	31151	31201	31251
Fuel 4 flow total thousands	31052	31102	31152	31202	31252
Fuel 4 flow total millions	31053	31103	31153	31203	31253
Channel 5 output 0-255	31054	31104	31154	31204	31254
Channel 5 input 0-255	31055	31105	31155	31205	31255
Channel 6 output 0-255	31056	31106	31156	31206	31256
Channel 6 input 0-255	31057	31107	31157	31207	31257
Option 1	31058	31108	31158	31208	31258
Option 77	31059	31109	31159	31209	31259
Option 90	31060	31110	31160	31210	31260
Option 91	31061	31111	31161	31211	31261
Option 92	31062	31112	31162	31212	31262
Option 93	31063	31113	31163	31213	31263
Option 94	31064	31114	31164	31214	31264
Option 95	31065	31115	31165	31215	31265
Option 96	31066	31116	31166	31216	31266
Option 97	31067	31117	31167	31217	31267
Option 98	31068	31118	31168	31218	31268
Option 99	31069	31119	31169	31219	31269
Option 100	31070	31120	31170	31220	31270
Option 101	31071	31121	31171	31221	31271
Option 102	31072	31122	31172	31222	31272
Option 103	31073	31123	31173	31223	31273
Option 104	31074	31124	31174	31224	31274
Option 105	31075	31125	31175	31225	31275
Option 106	31076	31126	31176	31226	31276
Option 107	31077	31127	31177	31227	31277
Option 108	31078	31128	31178	31228	31278
Option 109	31079	31129	31179	31229	31279
Lockout code	31080	31130	31180	31230	31280
Option 71 fuel 1 type	31081	31131	31181	31231	31281
Option 72 fuel 2 type	31082	31132	31182	31232	31282
Option 73 fuel 3 type	31083	31133	31183	31233	31283
Option 74 fuel 4 type	31084	31134	31184	31234	31284
Option 61 flow units fuel 1	31085	31135	31185	31235	31285
Option 62 flow units fuel 2	31086	31136	31186	31236	31286
Option 63 flow units fuel 3	31087	31137	31187	31237	31287
Option 64 flow units fuel 4	31088	31138	31188	31238	31288
Fuel 1 hours run	31089	31139	31189	31239	31289
Fuel 2 hours run	31090	31140	31190	31240	31290
Fuel 3 hours run	31091	31141	31191	31241	31291
Fuel 4 hours run	31092	31142	31192	31242	31292
Fuel 1 start ups	31093	31143	31193	31243	31293
Fuel 2 start ups	31094	31144	31194	31244	31294
Fuel 3 start ups	31095	31145	31195	31245	31295
Fuel 4 start ups	31096	31146	31196	31246	31296
Air pressure	31097	31147	31197	31247	31297
Air pressure coding	31098	31148	31198	31248	31298
Gas pressure	31099	31149	31199	31249	31299
Gas pressure coding	31100	31150	31200	31250	31300

3X Reference Addresses - Input Registers

The information on this page is only relevant to standalone EGAs connected directly to the DTI via the EGA port.

	EGA Number				
	1	2	3	4	5
Fuel selected	30601	30621	30641	30661	30681
% O2	30602	30622	30642	30662	30682
% CO2	30603	30623	30643	30663	30683
ppm CO	30604	30624	30644	30664	30684
ppm NO	30605	30625	30645	30665	30685
ppm SO2	30606	30626	30646	30666	30686
Exhaust temperature	30607	30627	30647	30667	30687
Efficiency	30608	30628	30648	30668	30688
Error number	30609	30629	30649	30669	30689
% voltage input	30610	30630	30650	30670	30690
Exhaust ? T	30611	30631	30651	30671	30691
Ambient	30612	30632	30652	30672	30692
Auxiliary temperature	30613	30633	30653	30673	30693
Service L.E.D.'s	30614	30634	30654	30674	30694

	EGA Number				
	6	7	8	9	10
Fuel selected	30701	30721	30741	30761	30781
% O2	30702	30722	30742	30762	30782
% CO2	30703	30723	30743	30763	30783
ppm CO	30704	30724	30744	30764	30784
ppm NO	30705	30725	30745	30765	30785
ppm SO2	30706	30726	30746	30766	30786
Exhaust temperature	30707	30727	30747	30767	30787
Efficiency	30708	30728	30748	30768	30788
Error number	30709	30729	30749	30769	30789
% voltage input	30710	30730	30750	30770	30790
Exhaust ? T	30711	30731	30751	30771	30791
Ambient	30712	30732	30752	30772	30792
Auxiliary temperature	30713	30733	30753	30773	30793
Service L.E.D.'s	30714	30734	30754	30774	30794

3X Reference Addresses - Input Registers

MM Number		
1	Error	31301
2	Error	31302
3	Error	31303
4	Error	31304
5	Error	31305
6	Error	31306
7	Error	31307
8	Error	31308
9	Error	31309
10	Error	31310

Please see section 6.17.8.4 for a list of the error codes that can be seen for each Modbus address.

MM Number		
1	Lockout	31311
2	Lockout	31312
3	Lockout	31313
4	Lockout	31314
5	Lockout	31315
6	Lockout	31316
7	Lockout	31317
8	Lockout	31318
9	Lockout	31319
10	Lockout	31320

Please see section 6.17.8.5 for a list of the lockout codes that can be seen for each Modbus address.

3X Reference Addresses - Analogue inputs- totalised values

Analogue I/O Module Number		**Channel Number** 1	2	3	4	5	6
1	byte 7/6	31324	31328	31332	31336	31340	31344
	byte 5/4	31323	31327	31331	31335	31339	31343
	byte 3/2	31322	31326	31330	31334	31338	31342
	byte 1/0	31321	31325	31329	31333	31337	31341
2	byte 7/6	31348	31352	31356	31360	31364	31368
	byte 5/4	31347	31351	31355	31359	31363	31367
	byte 3/2	31346	31350	31354	31358	31362	31366
	byte 1/0	31345	31349	31353	31357	31361	31365
3	byte 7/6	31372	31376	31380	31384	31388	31392
	byte 5/4	31371	31375	31379	31383	31387	31391
	byte 3/2	31370	31374	31378	31382	31386	31390
	byte 1/0	31369	31373	31377	31381	31385	31389
4	byte 7/6	31396	31400	31404	31408	31412	31416
	byte 5/4	31395	31399	31403	31407	31411	31415
	byte 3/2	31394	31398	31402	31406	31410	31414
	byte 1/0	31393	31397	31401	31405	31409	31413
5	byte 7/6	31420	31424	31428	31432	31436	31440
	byte 5/4	31419	31423	31427	31431	31435	31439
	byte 3/2	31418	31422	31426	31430	31434	31438
	byte 1/0	31417	31421	31425	31429	31433	31437
6	byte 7/6	31444	31448	31452	31456	31460	31464
	byte 5/4	31443	31447	31451	31455	31459	31463
	byte 3/2	31442	31446	31450	31454	31458	31462
	byte 1/0	31441	31445	31449	31453	31457	31461
7	byte 7/6	31468	31472	31476	31480	31484	31488
	byte 5/4	31467	31471	31475	31479	31483	31487
	byte 3/2	31466	31470	31474	31478	31482	31486
	byte 1/0	31465	31469	31473	31477	31481	31485
8	byte 7/6	31492	31496	31500	31504	31508	31512
	byte 5/4	31491	31495	31499	31503	31507	31511
	byte 3/2	31490	31494	31498	31502	31506	31510
	byte 1/0	31489	31493	31497	31501	31505	31509
9	byte 7/6	31516	31520	31524	31528	31532	31536
	byte 5/4	31515	31519	31523	31527	31531	31535
	byte 3/2	31514	31518	31522	31526	31530	31534
	byte 1/0	31513	31517	31521	31525	31529	31533
10	byte 7/6	31540	31544	31548	31552	31556	31560
	byte 5/4	31539	31543	31547	31551	31555	31559
	byte 3/2	31538	31542	31546	31550	31554	31558
	byte 1/0	31537	31541	31545	31549	31553	31557

3X Reference Addresses - Water Level Input Registers

	MM Number				
	1	2	3	4	5
Probe 1 signal	32001	32101	32201	32301	32401
Probe 1 reference	32002	32102	32202	32302	32402
	32003	32103	32203	32303	32403
Probe 1 Version/Issue (ms/ls byte)	32004	32104	32204	32304	32404
Probe 2 signal	32005	32105	32205	32305	32405
Probe 2 reference	32006	32106	32206	32306	32406
	32007	32107	32207	32307	32407
Probe 2 Version/Issue (ms/ls byte)	32008	32108	32208	32308	32408
Alarm status	32009	32109	32209	32309	32409
Level status	32010	32110	32210	32310	32410
WL version/Issue (ms/ls byte)	32011	32111	32211	32311	32411
Alarm code	32012	32112	32212	32312	32412
	32013	32113	32213	32313	32413
Steam temperature °C	32014	32114	32214	32314	32414
Feed water temperature °C	32015	32115	32215	32315	32415
Steam rate lb/hr	32016	32116	32216	32316	32416
Heat to steam Btus/lb	32017	32117	32217	32317	32417
Control element %	32018	32118	32218	32318	32418
	32019	32119	32219	32319	32419
Control point raised	32020	32120	32220	32320	32420
	32021	32121	32221	32321	32421
FO CRC	32022	32122	32222	32322	32422
Totalised steam lbs (ls word)	32023	32123	32223	32323	32423
Totalised steam lbs (ms word)	32024	32124	32224	32324	32424
Steam temperature F	32025	32125	32225	32325	32425
Feed water temperature F	32026	32126	32226	32326	32426
Steam rate Kgs/hr	32027	32127	32227	32327	32427
Heat to steam KJ/Kg	32028	32128	32228	32328	32428
Totalised steam Kgs (ls word)	32029	32129	32229	32329	32429
Totalised Steam Kgs (ms word)	32030	32130	32230	32330	32430
Probe 1 temperature °C	32031	32131	32231	32331	32431
Probe 2 temperature °C	32032	32132	32232	32332	32432
Probe 1 temperature °F	32033	32133	32233	32333	32433
Probe 2 temperature °F	32034	32134	32234	32334	32434
Max load index (%)	32035	32135	32235	32335	32435
Min load index (%)	32036	32136	32236	32336	32436
Cold start status- off(0)/on(1)	32037	32137	32237	32337	32437
Probe 1 corrected working	32038	32138	32238	32338	32438
Probe 2 corrected working	32039	32139	32239	32339	32439
TDS target	32040	32140	32240	32340	32440
TDS measured	32041	32141	32241	32341	32441
WL commdata CRC	32042	32142	32242	32342	32442
WL control type	32043	32143	32243	32343	32443

3X Reference Addresses - Water Level Input Registers

	MM Number				
	6	7	8	9	10
Probe 1 signal	32501	32601	32701	32801	32901
Probe 1 reference	32502	32602	32702	32802	32902
	32503	32603	32703	32803	32903
Probe 1 Version/Issue (ms/ls byte)	32504	32604	32704	32804	32904
Probe 2 signal	32505	32605	32705	32805	32905
Probe 2 reference	32506	32606	32706	32806	32906
	32507	32607	32707	32807	32907
Probe 2 Version/Issue (ms/ls byte)	32508	32608	32708	32808	32908
Alarm status	32509	32609	32709	32809	32909
Level status	32510	32610	32710	32810	32910
WL version/Issue (ms/ls byte)	32511	32611	32711	32811	32911
Alarm code	32512	32612	32712	32812	32912
	32513	32613	32713	32813	32913
Steam temperature °C	32514	32614	32714	32814	32914
Feed water temperature °C	32515	32615	32715	32815	32915
Steam rate lb/hr	32516	32616	32716	32816	32916
Heat to steam Btus/lb	32517	32617	32717	32817	32917
Control element %	32518	32618	32718	32818	32918
	32519	32619	32719	32819	32919
Control point raised	32520	32620	32720	32820	32920
	32521	32621	32721	32821	32921
FO CRC	32522	32622	32722	32822	32922
Totalised steam lbs (ls word)	32523	32623	32723	32823	32923
Totalised steam lbs (ms word)	32524	32624	32724	32824	32924
Steam temperature F	32525	32625	32725	32825	32925
Feed water temperature F	32526	32626	32726	32826	32926
Steam rate Kgs/hr	32527	32627	32727	32827	32927
Heat to steam KJ/Kg	32528	32628	32728	32828	32928
Totalised steam Kgs (ls word)	32529	32629	32729	32829	32929
Totalised Steam Kgs (ms word)	32530	32630	32730	32830	32930
Probe 1 temperature °C	32531	32631	32731	32831	32931
Probe 2 temperature °C	32532	32632	32732	32832	32932
Probe 1 temperature °F	32533	32633	32733	32833	32933
Probe 2 temperature °F	32534	32634	32734	32834	32934
Max load index (%)	32535	32635	32735	32835	32935
Min load index (%)	32536	32636	32736	32836	32936
Cold start status- off(0)/on(1)	32537	32637	32737	32837	32937
Probe 1 corrected working	32538	32638	32738	32838	32938
Probe 2 corrected working	32539	32639	32739	32839	32939
TDS target	32540	32640	32740	32840	32940
TDS measured	32541	32641	32741	32841	32941
WL commdata CRC	32542	32642	32742	32842	32942
WL control type	32543	32643	32743	32843	32943

6.17.5 4X Reference Addresses - Holding Registers

Individual Required value for each Micro Modulation unit

MM ID number		Reference Address
1		40001
2		40002
3		40003
4		40004
5		40005
6		40006
7		40007
8		40008
9		40009
10		40010

Global Required Value for all MMs

40011

Lead Boiler selection

40012

Reserved - DO NOT USE

40013 - 40016

Load Index commands- ability to change the firing rate remotely

	MM Number				
	1	2	3	4	5
DTI load index value	40121	40122	40123	40124	40125
DTI load index command- off(0)/on(1)	40131	40132	40133	40134	40135

	MM Number				
	6	7	8	9	10
DTI load index value	40126	40127	40128	40129	40130
DTI load index command- off(0)/on(1)	40136	40137	40138	40139	40140

4X Reference Addresses - Holding Registers

Analogue I/O Module Number		**Output Number**					
		1	2	3	4	5	6
1		40017	40018	40019	40020	40021	40022
2		40025	40026	40027	40028	40029	40030
3		40033	40034	40035	40036	40037	40038
4		40041	40042	40043	40044	40045	40046
5		40049	40050	40051	40052	40053	40054
6		40057	40058	40059	40060	40061	40062
7		40065	40066	40067	40068	40069	40070
8		40073	40074	40075	40076	40077	40078
9		40081	40082	40083	40084	40085	40086
10		40089	40090	40091	40092	40093	40094

6.17.6 Switch Settings - Modbus Operation

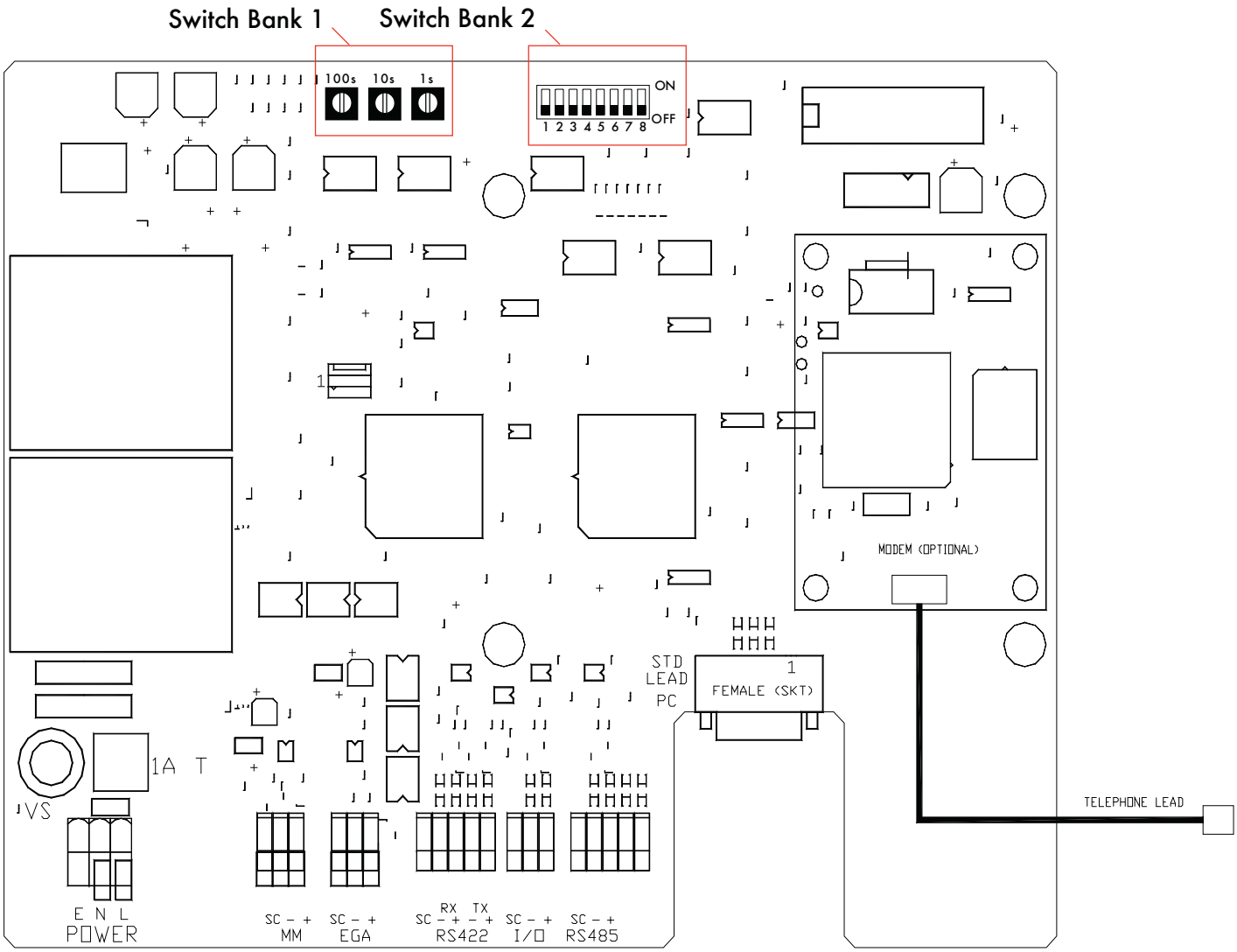

Switch Bank 1

Set the Modbus address accordingly.

For example, to set address number 123:

100s	= 1
10s	= 2
1s	= 3

Switch Bank 2

1 off - Modbus 'ASCII' mode
on - Modbus 'RTU' mode

2 Transmission settings
off - 8 data bits, 1 stop bit, no parity.
on - 8 data bits, 1 stop bit, even parity.

3-5 no user function, must be set off

6 Windows PCDTI/MODBUS operation
off - 422 port set for Windows PCDTI
on - 422 port set for MODBUS

7 Windows PCDTI/MODBUS operation
off - PC port set for WinPCDTI
on - PC port set for MODBUS

8 MM Port Baud Rate
off - 9600 (Mk6, Mini Mk6 and Mini Mk5 MMs)
on - 4800 (Older Mk5 and Mini MMs)*
* Technical Memo: Data Communication Compatibility 3/9/1999

6.17.7 Other Information

Modbus Transmission Interface

There is no hardware or software flow control on any port.

Baud Rate 9600.

Supported MODBUS Commands

1	Read coil status
2	Read input status
3	Read holding registers
4	Read input registers
5	Force single coil
6	Preset single register
15	Force multiple coils
16	Preset multiple registers

6.17.7.3 Supported Exception Responses

Exception responses are not supported. No response is given to an unrecognised request.

6.17.7.4 Serial Port Connections

RS232 'PC' port - 9 Way Female D connector

PIN	Function
2	Data out
3	Data in
5	Signal ground

RS422 port - Screw terminal blocks

Receive and transmit connections are as identified on printed circuit board.

6.17.8 Relevance of MM/EGA data

Each MM/EGA can provide the following information. All values are instantaneous. Each MM/EGA system updates the DTI approximately once every 20 seconds. Certain values and some values under certain conditions may require a decimal point. In these cases the user must add the decimal point accordingly (* only valid if EGA operational on system)

Digital Inputs (1x references)

Command status of M.M. 'CR Relay'	0- Off 1- On
Flow detector type	0- Temperature 1- Pressure
Optioned for flow metering	0- No 1- Yes
CO off/on on fuel 2 (fuel 1 CO always on)	0- Off 1- On
Temperature units	0- C 1- F
Pressure units	0- bar 1- psi
Optioned for voltage input modulation	0- No 1- Yes
Optioned for EGA	0- No 1- Yes
Boiler up to 'trimming' temperature	0- No 1- Yes
EGA cooler temperature ready	0- No 1- Yes
EGA ambient temperature OK	0- No 1- Yes
Optioned to display NO	0- No 1- Yes
Option to display SO_2	0- No 1- Yes
EGA ambient temperature low/high (relevant if bit 3 (ambient temperature) is 0)	0- LOW 1- HIGH
Optioned for sequencing	0- NO 1- YES
Setpoint/Disable commands accepted	0- NO 1- YES
Hand operation status	0- Modulating 1- Hand Operation
Low flame hold status	0- Modulating 1- Low Flame Hold
This MM controlling DTI bus communication	0- NO 1- YES
Input 88/41 set (lead boiler select)	0- NO 1- YES

Lead boiler status	0- not lead boiler 1- lead boiler
'Disabled' status	0- enabled 1- disabled
Slave burner indication status - test bit 0	0- master plus one 1- master minus one

Analogue Inputs (3x references)

0-100	Firing rate/load index - percentage	
0-250	Maximum firing rate- value number entered in option #34	
0-999 0.0-99.9	Actual value of boiler flow temperature/pressure- degrees C/F/psi Pressure- bar	
0-999 0.0-99.9	Required setpoint of boiler flow temperature/pressure- degrees C/F/psi Pressure- bar	
0-2	Present fuel selected	0- Fuel 1 (usually GAS) 1- Fuel 2 (usually OIL) 2- Fuel 3 (usually OIL)
1-7	Number of channels in operation (add one to this to get total number)	
-6.0-96.0	CH1 positioning motor position degrees angular	
-6.0-96.0	CH2 positioning motor position degrees angular	
-6.0-96.0	CH3 positioning motor position degrees angular	
-6.0-96.0	Ch4 positioning motor position degrees angular	
0-N	Fatal Error Code Value is as MM ERR display	0 - System is OK 1 - N system shut down
0-2	Single/twin burner operation 0 - single burner 1 - twin burner (both together only) 2 - twin burner (both together/one or the other)	
0-25.5	Present value percentage oxygen in flue gas	
0-25.5	Present value percentage carbon dioxide in flue gas	
0-999	Present value ppm carbon monoxide in flue gas	
0-999	Present value flue gas temperature	
0-99.9	Present value percentage combustion efficiency	
0-999	Present value NO	
0-999	Present value SO_2	

0-25.5	Commissioned value percentage oxygen in flue gas
0-25.5	Commissioned value percentage carbon dioxide in flue gas
0-999	Commissioned value ppm carbon monoxide in flue gas
0-999	Commissioned value flue gas temperature
0-99.9	Commissioned value percentage combustion efficiency
0-999	Commissioned value NO
0-999	Commissioned value SO_2
0-N	EGA error code normal- 0. Any other value indicates an error.
0-99.9	Minimum setpoint accepted(0-999, 0-99.9)
0-99.9	Minimum setpoint accepted(0-999, 0-99.9)
0-999	Flow value units
0-999	Flow value thousands (multiply thousands value by 1000 then add units value then divide by 100 to get flow value)
0-999	Fuel 1 totalised value units
0-999	Fuel 1 totalised value thousands
0-999	Fuel 1 totalised value millions
0-999	Fuel 2 totalised value units
0-999	Fuel 2 totalised value thousands
0-999	Fuel 2 totalised value millions
0-999	Fuel 3 totalised value units
0-999	Fuel 3 totalised value thousands
0-999	Fuel 3 totalised value millions
-6.0-96.0	Ch5 positioning motor position degrees angular
-6.0-96.0	Ch6 positioning motor position degrees angular
-6.0-96.0	Ch7 positioning motor position degrees angular
-6.0-96.0	Ch8 positioning motor position degrees angular

The following table lists the startup/firing status codes along with an explanation of what the codes mean. This is for Modbus addresses:

30102 MM ID #1
30152 MM ID #2
30202 MM ID #3
30252 MM ID #4
30302 MM ID #5
30352 MM ID #6
30402 MM ID #7
30452 MM ID #8
30502 MM ID #9
30552 MM ID #10

Code		Explanation
19		Waiting for stat circuit to complete
20		Waiting for command to drive air damper to purge position
21		Driving air damper to purge position
22		Purging: Waiting for command o drive valves to ignition position
23		Driving valves to ignition position
24		Ignition taking place
25		Burner firing and modulating
26		Post purge taking place

If 0, then the indicated transmission is direct from an E.G.A.

The following table lists the sequence status for each M.M. This is for Modbus addresses:

30103 MM ID #1
30153 MM ID #2
30203 MM ID #3
30253 MM ID #4
30303 MM ID #5
30353 MM ID #6
30403 MM ID #7
30453 MM ID #8
30503 MM ID #9
30553 MM ID #10

Code		Explanation
0		On
1		Standby
2		Warm
3		Off

The following table lists the error codes along with an explanation of what the codes mean. This is for Modbus addresses:

31301 MM ID #1
31302 MM ID #2
31303 MM ID #3
31304 MM ID #4
31305 MM ID #5
31306 MM ID #6
31307 MM ID #7
31308 MM ID #8
31309 MM ID #9
31310 MM ID #10

Code		**Error Message/Explanation**
1		CH1 positioning error
2		CH2 positioning error
3		load detector
4		Software error
5		PROM memory fault
6		Commisssion data fault
7		RAM memory fault
8		CH3 positioning error
9		CH4 positioning error
40		CR1 test failure
41		CH1 gain error
42		CH2 gain error
43		CH3 gain error
44		5 volt supply error
45		Watchdog- CR2 safety test failed
46		CH4 gain error
47		A/D converter
80		CH5 error
81		CH6 error
83		CH5 feedback signal error
84		CH6 feedbcak signal error
92		Air pressure outside limits
100		Twin burner communications failed

The following table lists the lockout codes along with an explanation of what the codes mean. This is for Modbus addresses:

31311 MM ID #1
31312 MM ID #2
31313 MM ID #3
31314 MM ID #4
31315 MM ID #5
31316 MM ID #6
31317 MM ID #7
31318 MM ID #8
31319 MM ID #9
31320 MM ID #10

Code		Lockout Message	Code		Lockout Message
1		CPI wrong state	27		Watchdog fail 2c
2		No air proving	28		Watchdog fail 2d
3		Ignition output fault	29		Input faulty
4		Motor output fault	30		Gas sensor error
5		Start gas output fault	31		Air sensor error
6		Main gas output 1 fault	32		Low gas pressure
7		Main gas output 2 fault	33		VPS air zeroing fail
8		Vent valve output fault	34		VPS gas pressure low
9		Fail safe relay fault	35		UV short circuit
10		Simulated flame	36		Oil pressure too low
11		VPS air proving fail	37		Oil pressure too high
12		VPS gas proving fail	38		CPU test failed
13		No flame signal	39		Freeze timeout
14		Shutter fault	40		Purge air pressure low
15		No cpi reset	41		Option 141 incorrect
16		Lockout permanently active	42		Terminal 86 inverse
17		Gas pressure too low	43		Terminal 85-86 fault
18		Gas pressure too high	44		Prove cct fail
19		RAM test failed	45		No prove cct set
20		PROM test failed	46		No prove cct reset
21		Watchdog fault 1a	198		BC input short
22		Watchdog fault 1b	199		Lockout 199
23		Watchdog fault 1c	200		
24		Watchdog fault 1d	201		Lockout 201
25		Watchdog fail 2a	202		EEPROM faulty
26		Watchdog fail 2b			

The following lists show the various codes for the water level Modbus addresses:

WL control type:

0- Modulating standard
1- On/off
2- Modulating high high
3- Modulating pre 1st low/pre high

Level status- the is the current level of the water:

0- Ok
1- High water
2- 1st low
3- 2nd low
4- High high water
5- Pre 1st low
6- Pre high water

Alarm code:

0- Ok
1- 2nd low
2- probe 1 comms
3- Probe 2 comms
4- Probe 1 short
5- Probe 2 short
6- Probe mismatch
7- Probe 1 TC
8- Probe 2 TC
9- Permanent reset
10- Permanent test
11- Keystuck reset
12- PU Eeprom
13- PU bogus EE state
14- Incompatible config
15- Probe 1 bogus comm data
16- Probe 2 bogus comm data
17- Config range check fail
18- 1st low
19- High water
20- Probe 1 still water
21- Probe 2 still water
22- Probes diverse
23- Pre 1st low
24- Pre high water

See section 5 for further explanation of the alarm codes.

6.17.9 Further Information

For more detailed information regarding the Modbus protocol, refer to the following publication:

Modicon Modbus Protocol Reference Guide,
PI-MBUS-300

Also visit the website: www.modicon.com

6.18 Autoflame winPCDTI Software

The Autoflame WinPCDTI software runs under Windows 95/98/NT4/XP and brings together our current range of products.

There are two modes of program operation:
Plant Supervisor for local control
Plant Manager for remote monitoring via modem for a number of sites

The software is presented in an intuitive graphical format where pictures and buttons are used to lead the operator through all the available functions.

Win PC DTI Operation (local PC connected directly)

The procedure detailed below indicates the set-up of the Autoflame winPCDTI software installed on a local PC connected directly to the DTI via a standard serial lead from the serial port on the back of the DTI to the serial port on the PC.

Components Checklist

1 x DTI*
1 x DTI to PC comms lead*
1 x DTI System CD-ROM*
1 x PC running Windows
* Included in the DTI System Package

Instructions

1. Wire all the MM and EGA modules, EGA units that are being used for standalone analysis and I/O modules to the DTI as shown in section 6.11.

2. On the back of the DTI, set the switches as shown in section 6.17.6 for winPCDTI operation. Usually, the rotary switches on switch bank 1 will be set to 001 and ways 1-8 on switch bank 2 will all be set to off.

3. Connect the DTI to the PC via a serial lead. One end will connect to the DTI's RS232 PC Port. The other will connect to the PC's serial port, usually COM1 or COM2.

4. Power up the DTI and the PC.

5. Insert the DTI system CD-ROM into the PC. Follow the instructions on the CD case to install the Autoflame winPCDTI software.

6. When the installation is complete, run winPCDTI. As this is the first time that the software has been run, it will prompt you to select Plant Manager/Plant Supervisor mode. Select Plant Supervisor.

If the DTI and other MM/EGA system modules are operational, they should appear on-line and be accessible from the PC.

6.18.1.2 Win PC DTI Operation (remote PC connected via modem)

The procedure detailed below indicates the set-up of the Autoflame winPCDTI software installed on a remote PC connected to the DTI via the modem on the DTI.

Components Checklist

1 x DTI* (this must be part number DTI60100/MD- DTI with internal modem)
2 x Modem and PC serial lead (one installed on the back of the DTI as supplied)
1 x DTI System CD-ROM*
1 x PC running Windows
* Included in the DTI System Package

Instructions

1. Wire all the MM and EGA modules, EGA units that are being used for standalone analysis and I/O modules to the DTI as shown in section 6.11.

2. On the back of the DTI, set the switches as shown in section 6.17.6 for winPCDTI operation. Usually, the rotary switches on switch bank 1 will be set to 001 and ways 1-8 on switch bank 2 will all be set to off.

3. Connect the modem on the DTI to the telephone socket.

4. Power up the DTI.

5. At the PC, connect the modem to the PC and the modem to the telephone socket.

6. Power up the modem and the PC.

7. Insert the DTI system CD-ROM into the PC. Follow the instructions on the CD case to install the Autoflame winPCDTI software.

8. When the installation is complete, run winPCDTI. As this is the first time that the software has been run, it will prompt you to select Plant Manager/Plant Supervisor mode. Select Plant Manager.

9. The site list will be empty to start of with. Click New Site to create a site entry in the database. Enter a name and telephone number for the site and save the changes.

10. Go back to the site list, click on your site and click Connect to dial into the remote DTI. If the other MM/EGA system modules are operational, they should appear on-line and be accessible from the PC.

6.18.1.3 Win PC DTI Operation (remote PC connected via a line driver)

The procedure detailed below indicates the set-up of the Autoflame winPCDTI software installed on a remote PC (up to 1km/4000ft) connected to the DTI via the RS422 port on the DTI to a line driver.

Components Checklist

1 x DTI*
1x Line driver and power supply
1x Standard PC modem lead
1 x DTI System CD-ROM*
1 x PC running Windows
* Included in the DTI System Package

Instructions

1. Wire all the MM and EGA modules, EGA units that are being used for standalone analysis and I/O modules to the DTI as shown in section 6.11.

2. On the back of the DTI, set the switches as shown in section 6.17.6 for winPCDTI operation. Usually, the rotary switches on switch bank 1 will be set to 001 and ways 1-8 on switch bank 2 will all be set to off.

3. Connect the long distance wiring to the RS422 port of the DTI as shown in section 6.13. At the PC end, connect the long distance wiring to the line driver. Set the switch on the line driver to DCE and plug the line driver to the PC using a standard PC Modem lead.

4. Power up the DTI, the PC and then the line driver (using its external power supply).

5. Insert the DTI system CD-ROM into the PC. Follow the instructions on the CD case to install the Autoflame winPCDTI software.

6. When the installation is complete, run winPCDTI. As this is the first time that the software has been run, it will prompt you to select Plant Manager/Plant Supervisor mode. Select Plant Supervisor.

If the DTI and other MM/EGA system modules are operational, they should appear on-line and be accessible from the PC.

6.19.1 Overview

Autoflame's DTI unit interfaces with the Autoflame MM/EGA system. In doing so it provides a simple means of gathering information and presenting it to a bus or network. The DTI will interface with up to ten MM/EGA systems and up to ten analogue and/or digital units. This section details information regarding the Data Transfer Interface (DTI) 'Metasys' interface.

6.19.1.2 Requirements

Compatible software versions are:

DTI unit (DTI60100)	All serial numbers
DTI unit (DTI60100/MD)	All serial numbers
Mk6 unit	All serial numbers
Mini Mk6 unit	All serial numbers
Mini Mk5 evo	All serial numbers
Old DTI unit (DTI20010)	Serial number 095132 onwards
Old DTI EPROM	Metasys v1.02 onwards
MM Mk5 EPROM	300/0/15/4
mini Mk5 EPROM (2channel)	610/1/15/3
mini Mk5 EPROM (3channel)	620/1/15/3

6.19.2 Connecting the DTI to Metasys

The DTI has a port which provides direct access to the Metasys network. Connection is made via a screw terminal block labelled 'RS485+', 'RS485-' and 'RS485 screen'. Only the DTI address needs to be set by the installation engineer. The following diagram illustrates the connections required.

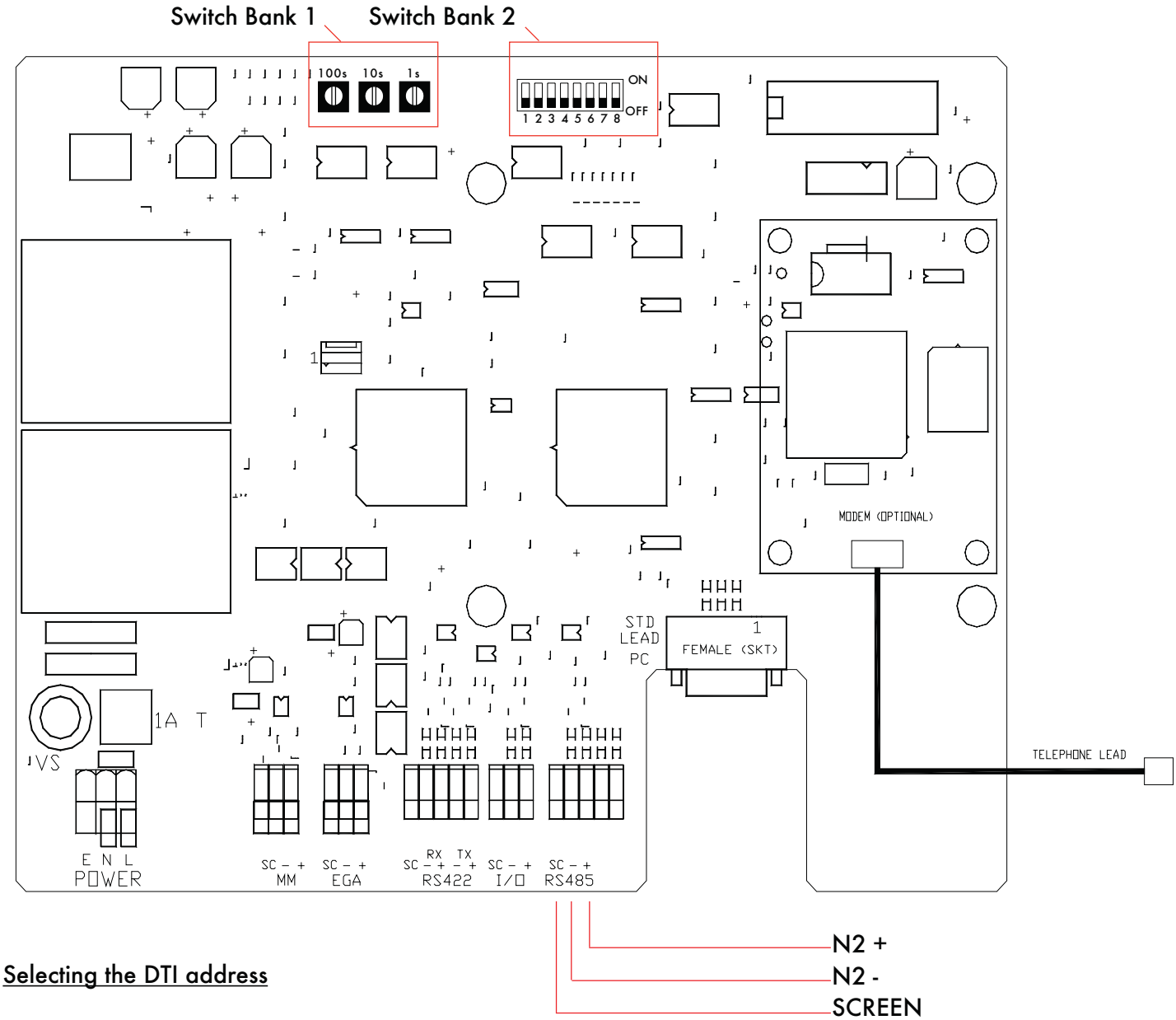

Selecting the DTI address

The DTI N2 address is selected by means of Switch Bank 1. Set the three rotary switches appropriately.

For example, to set address number 123: 100s = 1
10s = 2
1s = 3

The DTI can occupy any address on the Metasys network, however the DTI requires eleven free consecutive address, starting from and including the address selected using the switches. If the DTI is given address 30, 30 is selected on SW1. However addresses 31 to 40 must also be free on the network.

If Metasys operation is required alongside Modbus operation, the Metasys address and Modbus address will have to be the same.

If winPCDTI/Modbus/Metasys combinations are used, the required value and enable/disable commands can be implemented by any of these three means.

6.19.3 Network Point Table

The DTI occupies 11 (eleven) addresses on the network. The first 10 address are used to read data from the 10 MM/EGA systems and only the MM/EGa systems. The last (eleventh) address is used to read and write data to the analogue and digital units. This address is also used to read the status of MM/EGA systems and write values to them. All of the systems addresses implement internal integer and byte values only. A full network point table follows.

Technical Note

Please be aware that the Change of State feature is not implemented on the DTI/Metasys interface. Therefore, normal Metasys COS (alarm limits for analogue values and normal condition for binary) notification will be defeated. If COS notification is required, then it is necessary for the operator to:

- Map the specific object(s) requiring COS to a CS object
- Define a AD or BD object with the CS object of the required COS point
- Assign Alarm Limits to the AD
- The AD or BD point will only be scanned at a minimum of 30 seconds
- The normal state of the BO must be updated (written to) by GPL

Analogue/binary input points that are mapped in directly that do not support COS will never report a change of state condition. They will report the current value when read but no alarm notification will occur. A read will only occur if a focus window is open or a feature requires the current value.

Network point table for first 10 (ten) addresses (read values from MM/EGA systems).

NPT	NPA	UNITS	DESCRIPTION	RANGE	NOTE
AI	Not used	-	-	-	-
BI	Not used	-	-	-	-
AO	Not used	-	-	-	-
BO	Not used	-	-	-	-
NPT	**NPA**	**UNITS**	**DESCRIPTION**	**RANGE**	**NOTE**
ADF	01	%	Load index	0 to 100.0	
ADF	02		Startup/Firing status	19 - 28	19 = Waiting for stat. circuit to complete. 20 = Waiting for command to drive air damper to purge position. 21 = Driving air damper to purge position. 22 = Purging, waiting for command to drive values to ignition position. 23 = Driving valves to ignition position. 24 = Ignition taking place. 25 = Burner firing and modulating. 26 = Post purge taking place. 27 = Not used. 28 = Golden start.
ADF	03		Sequence status	1 to 10	
ADF	04		Boiler capacity		see option 34 on MM
ADF	05		Actual value		For units see Options 1, 51, and 52 on associated MM
ADF	06		Required value		For units see Options 1, 51, and 52 on associated MM
ADF	07		Fuel selected	0 to 3	0 = Fuel 1 (usually gas) 1 = Fuel 2 (usually oil) 2 = Fuel 3 (usually oil) 3 = Fuel 4 (Aux.)
ADF	08		Number of channels	0 to 8	
ADF	09		Channel 1 position	-6.0 to 96.0	Displayed as –6.0 to 96.0
ADF	10		Channel 2 position	-6.0 to 96.0	Displayed as –6.0 to 96.0
ADF	11		Channel 3 position	-6.0 to 96.0	Displayed as –6.0 to 96.0
ADF	12		Channel 4 position	-6.0 to 96.0	Displayed as –6.0 to 96.0
ADF	13		MM error number	00 to 73	see section 2.3.1.2 of manual
ADF	14		Single/Twin operation	0 to 1	0 = single 1 = twin burner
ADF	15	%	Run O_2	0 to 20.9	Displayed as 0 to 20.9
ADF	16	%	Run CO_2	0 to 15	Displayed as 0 to 15.0
ADF	17	ppm	Run CO	0 to 999.0	
ADF	18		Run exhaust temperature	0 to 999.0	for units see option 51 on MM
ADF	19	%	Run efficiency	0 to 100.0	
ADF	20	ppm	Run NO	0 to 999.0	
ADF	21	ppm	Run SO_2	0 to 999.0	
ADF	22	%	Comm. O_2	0 to 20.9	Displayed as 0 to 20.9
ADF	23	%	Comm. CO_2	0 to 15.0	Displayed as 0 to 15.0
ADF	24	ppm	Comm. CO	0 to 999.0	
ADF	25		Comm. exhaust temp	0 to 999.0	for units see option 51 on MM
ADF	26	%	Comm. efficiency	0 to 100.0	

NPT	NPA	UNITS	DESCRIPTION	RANGE	NOTE
ADF	27	ppm	Comm. NO	0 to 999.0	
ADF	28	ppm	Comm. SO_2	0 to 999.0	
ADF	29		EGA error number	0 to 25	see section 3.4.1 of manual
ADF	30		Minimum required value		For units see Options 1, 51, and 52 on associated MM
ADF	31		Maximum required value		For units see Options 1, 51, and 52 on associated MM
ADF	32		Present flow units	0 to 999.0	
ADF	33		Present flow thousands	0 to 999.0	
ADF	34		Fuel 1 flow total units	0 to 999.0	
ADF	35		Fuel 1 flow total units	0 to 999.0	
ADF	36		Fuel 1 flow total thousands	0 to 999.0	
ADF	37		Fuel 1 flow total millions	0 to 999.0	
ADF	38		Fuel 2 flow total units	0 to 999.0	
ADF	39		Fuel 2 flow total thousands	0 to 999.0	
ADF	40		Fuel 2 flow total millions	0 to 999.0	
ADF	41		Fuel 3 flow total units	0 to 999.0	
ADF	42		Fuel 3 flow total thousands	0 to 999.0	
ADF	43		Fuel 3 flow total millions	0 to 999.0	
ADF	44		Channel 5 position	-6.0 to 96.0	Displayed as –6.0 to 96.0
ADF	45		Channel 6 position	-6.0 to 96.0	Displayed as –6.0 to 96.0
ADF	46		Channel 7 position	-6.0 to 90.0	Displayed as –6.0 to 96.0
ADF	47		Channel 8 position	-6.0 to 96.0	Displayed as –6.0 to 96.0
ADF	48		Not Used		
ADF	49		Not Used		
ADF	50		Not Used		
ADF	51		Fuel 4 flow total units	0 to 999.0	
ADF	52		Fuel 4 flow total thousands	0 to 999.0	
ADF	53		Fuel 4 flow total millions	0 to 999.0	
ADF	54		Channel 5 output	0 to 255.0	
ADF	55		Channel 5 input	0 to 255.0	
ADF	56		Channel 6 output	0 to 255.0	
ADF	57		Channel 6 input	0 to 255.0	
ADF	58		Option 1	3 to 8	See option table in manual
ADF	59		Option 77	0 to 5	See option table in manual
ADF	60		Option 90	0 to 1	See option table in manual
ADF	61		Option 91	0 to 2	See option table in manual
ADF	62		Option 92	1 to 200	See option table in manual
ADF	63		Option 93	1 to 200	See option table in manual
ADF	64		Option 94	0 to 2	See option table in manual
ADF	65		Option 95	0 to 1	See option table in manual
ADF	66		Option 96	0 to 200	See option table in manual
ADF	67		Option 97	0 to 200	See option table in manual
ADF	68		Not Used		
ADF	69		Not Used		
ADF	70		Option 100	0 to 1	See option table in manual
ADF	71		Option 101	0 to 2	See option table in manual
ADF	72		Option 102	1 to 200	See option table in manual
ADF	73		Option 103	1 to 200	See option table in manual
ADF	74		Option 104	0 to 2	See option table in manual

NPT	NPA	UNITS	DESCRIPTION	RANGE	NOTE
ADF	75		Option 105	0 to 1	See option table in manual
ADF	76		Option 106	0 to 200	See option table in manual
ADF	77		Option 107	0 to 200	See option table in manual
ADF	78		Not Used		
ADF	79		Not Used		
ADF	80		Lockout Code	0 to 255	See option table in manual
ADF	81		Option 71 Fuel 1 Type	0 to 3	0 = Fuel 1 (usually gas) 1 = Fuel 2 (usually oil) 2 = Fuel 3 (usually oil) 3 = Fuel 4 (Aux.)
ADF	82		Option 72 Fuel 2 Type	0 to 3	0 = Fuel 1 (usually gas) 1 = Fuel 2 (usually oil) 2 = Fuel 3 (usually oil) 3 = Fuel 4 (Aux.)
ADF	83		Option 73 Fuel 3 Type	0 to 3	0 = Fuel 1 (usually gas) 1 = Fuel 2 (usually oil) 2 = Fuel 3 (usually oil) 3 = Fuel 4 (Aux.)
ADF	84		Option 74 Fuel 4 Type	0 to 3	0 = Fuel 1 (usually gas) 1 = Fuel 2 (usually oil) 2 = Fuel 3 (usually oil) 3 = Fuel 4 (Aux.)
ADF	85		Option 61 Flow Units Fuel 1	0 to 4	0 = Cubic Feet 1 = Cubic Meters 2 = Kilograms 3 = Litres 4 = US Gallons
ADF	86		Option 62 Flow Units Fuel 2	0 to 4	0 = Cubic Feet 1 = Cubic Meters 2 = Kilograms 3 = Litres 4 = US Gallons
ADF	87		Option 63 Flow Units Fuel 3	0 to 4	0 = Cubic Feet 1 = Cubic Meters 2 = Kilograms 3 = Litres 4 = US Gallons
ADF	88		Option 64 Flow Units Fuel 4	0 to 4	0 = Cubic Feet 1 = Cubic Meters 2 = Kilograms 3 = Litres 4 = US Gallons
ADF	89		Fuel 1 Hours Run	0 to 9999.0	
ADF	90		Fuel 2 Hours Run	0 to 9999.0	
ADF	91		Fuel 3 Hours Run	0 to 9999.0	
ADF	92		Fuel 4 Hours Run	0 to 9999.0	
ADF	93		Fuel 1 Start ups	0 to 999.0	
ADF	94		Fuel 2 Start ups	0 to 999.0	
ADF	95		Fuel 3 Start ups	0 to 999.0	
ADF	96		Fuel 4 Start ups	0 to 999.0	
ADF	97		Air Pressure	0 to 999.0	Value is correctly scaled by DTI dependent on ADI 98

NPT	NPA	UNITS	DESCRIPTION	RANGE	NOTE
ADF	98		Air Pressure Coding	8 Bit Pattern	Bit_0 = 0 = off 1 = on Bit_1 = 0 = "WG 1 = mbar Bit_2 + Bit_3 =00 = 0 decimal places 01 = 1 decimal places 10 = 2 decimal places 11 = 3 decimal places Bit_4 = unused Bit_5 = unused Bit_6 = unused Bit_7 = unused
ADF	99		Gas Pressure	0 to 999.0	Value is correctly scaled by DTI dependent on ADI 100
ADF	100		Gas Pressure Coding	8 Bit Pattern	Bit_0 = 0 = off 1 = on Bit_1 + Bit_4 =00 = "WG 10 = mbar 01 = BAR 11 = PSI Bit_2 + Bit_3 =00 = 0 decimal places 01 = 1 decimal places 10 = 2 decimal places 11 = 3 decimal places Bit_5 = unused Bit_6 = unused Bit_7 = unused
ADF	101		Fuel Selected	0 to 3	0 = Fuel 1 (usually gas) 1 = Fuel 2 (usually oil) 2 = Fuel 3 (usually oil) 3 = Fuel 4 (Aux.)
ADF	102	%	E.G.A. O_2	0 to 20.9	Displayed as 0 to 209
ADF	103	%	E.G.A. CO_2	0 to 15.0	Displayed as 0 to 15.0
ADF	104	ppm	E.G.A. CO	0 to 999.0	
ADF	105	ppm	E.G.A. NO	0 to 999.0	
ADF	106	ppm	E.G.A. SO_2	0 to 999.0	
ADF	107		E.G.A. Exhaust temp	0 to 999.0	
ADF	108	%	E.G.A. Efficiency	0 to 100.0	
ADF	109		E.G.A. Error Number	0 to 25.0	
ADF	110	%	E.G.A. Voltage Input	0 to 100.0	
ADF	111		E.G.A. Exhaust ΔT	0 to 999.0	
ADF	112		E.G.A. Ambient	0 to 50.0	
ADF	113		E.G.A. Auxiliary Temp	0 to 999.0	
ADF	114		Service LEDS	8 Bit Pattern	Bit_0 to Bit_5 = 000000 = EGA requires servicing 000001 = 2 Months to service 000011 = 4 Months 000111 = 6 Months 001111 = 8 Months 011111 = 10 Months 111111 = 1 Year Bit_6 = 1 = System Fault Bit_7 = 1 = O.K. – EGA can run
ADF	115		Not Used		
ADF	116		Not Used		
ADF	117		Not Used		
ADF	118		Not Used		
ADF	119		Not Used		

NPT	NPA	UNITS	DESCRIPTION	RANGE	NOTE
ADF	120		Not Used		
ADF	121	Hz	Probe 1 Signal		Frequency
ADF	122	Hz	Probe 1 Reference		Frequency
ADF	123		Not Used		
ADF	124		Probe 1Version/Issue		ms/ls byte
ADF	125	Hz	Probe 2 Signal		Frequency
ADF	126	Hz	Probe 2 Reference		Frequency
ADF	127		Not Used		
ADF	128		Probe 2 Version/Issue		ms/ls byte
ADF	129		Alarm Status		0 – OK 1 – High Water 2 – 1st Low 3 – 2nd Low
ADF	130		Level Status		As Alarm Status just above
ADF	131		WL Version/Issue		ms/ls byte
ADF	132		Alarm Code		0-OK 1-2nd Low 2-Probe 1 Comms 3-Probe 2 Comms 4-Probe 1 Short 5-Probe 2 Short 6-Probe Mismatch 7-Probe 1 TC 8-Probe 2TC 9-Permanent Reset 10-Permanent Test 11-Keystuck Reset 12-Power Up EEprom 13-Bogus EEprom State 14-Incompatible Config 15-Probe 1 Bogus Comm Data 16-Probe 2 Bogus Comm Data 17-Config Range Check Fail 18-1st Low 19-HighWater 20-Probe 1 Still Water 21-Probe 2 Still Water 22-Probes Diverse 255-OK/Reset
ADF	133		Not Used		
ADF	134	C	Steam Temp		
ADF	135	C	Feed Water Temp		
ADF	136	lb/hr	Steam Rate		
ADF	137	Btus/lb	Heat to Steam		
ADF	138	%	Control Element		
ADF	139		Not Used		
ADF	140	%	Control Point Raised		0-Normal 1 to 99 - % raised between 'Control Point' and 'High Water' positions
ADF	141		Not Used		
ADF	142		Not Used		
ADF	143	lbs	Totalised Steam		
ADF	144				
ADF	145	F	Steam Temp		
ADF	146	F	Feed Water Temp		
ADF	147	Kgs/hr	Steam Rate		

NPT	NPA	UNITS	DESCRIPTION	RANGE	NOTE
ADF	148	KJ/Kg	Heat to Steam		
ADF	149	Kgs	Totalised Steam		
ADF	150		Not Used		
ADF	151	C	Probe 1 Temperature		
ADF	152	C	Probe 2 Temperature		
ADF	153	F	Probe 1 Temperature		
ADF	154	F	Probe 2 Temperature		

NPT	NPA	UNITS	DESCRIPTION	RANGE	NOTE
ADI	01	%	Load index	0 to 100	
ADI	02		Startup/Firing status	19 – 28	19 = Waiting for stat. circuit to complete. 20 = Waiting for command to drive air damper to purge position. 21 = Driving air damper to purge position. 22 = Purging, waiting for command to drive values to ignition position. 23 = Driving valves to ignition position. 24 = Ignition taking place. 25 = Burner firing and modulating. 26 = Post purge taking place. 27 = Not used. 28 = Golden start.
ADI	03		Sequence status	1 to 10	
ADI	04		Boiler capacity		see option 34 on MM
ADI	05		Actual value		see option 1 on MM
ADI	06		Required value		see option 1 on MM
ADI	07		Fuel selected	0 to 3	0 = Fuel 1 (usually gas) 1 = Fuel 2 (usually oil) 2 = Fuel 3 (usually oil) 3 = Fuel 4 (Aux.)
ADI	08		Number of channels	0 to 8	
ADI	09		Channel 1 position	-6.0 to 96.0	Displayed as -60 to 960
ADI	10		Channel 2 position	-6.0 to 96.0	Displayed as -60 to 960
ADI	11		Channel 3 position	-6.0 to 96.0	Displayed as -60 to 960
ADI	12		Channel 4 position	-6.0 to 96.0	Displayed as -60 to 960
ADI	13		MM error number	00 to 73	see section 2.3.1.2 of manual
ADI	14		Single/Twin operation	0 to 1	0 = single 1 = twin burner
ADI	15	%	Run O_2	0 to 20.9	Displayed as 0 to 209
ADI	16	%	Run CO_2	0 to 15	
ADI	17	ppm	Run CO	0 to 999	
ADI	18		Run exhaust temperature	0 to 999	for units see option 51 on MM
ADI	19	%	Run efficiency	0 to 100	
ADI	20	ppm	Run NO	0 to 999	
ADI	21	ppm	Run SO_2	0 to 999	
ADI	22	%	Comm. O_2	0 to 20.9	Displayed as 0 to 209
ADI	23	%	Comm. CO_2	0 to 15	
ADI	24	ppm	Comm. CO	0 to 999	
ADI	25		Comm. exhaust temp	0 to 999	for units see option 51 on MM
ADI	26	%	Comm. efficiency	0 to 100	
ADI	27	ppm	Comm. NO	0 to 999	
ADI	28	ppm	Comm. SO_2	0 to 999	
ADI	29		EGA error number	0 to 25	see section 3.4.1 of manual
ADI	30		Minimum required value		see option 30 on MM
ADI	31		Maximum required value		see option 31 on MM
ADI	32		Present flow units	0 to 999	
ADI	33		Present flow thousands	0 to 999	
ADI	34		Fuel 1 flow total units	0 to 999	
ADI	35		Fuel 1 flow total units	0 to 999	
ADI	36		Fuel 1 flow total thousands	0 to 999	
ADI	37		Fuel 1 flow total millions	0 to 999	

NPT	NPA	UNITS	DESCRIPTION	RANGE	NOTE
ADI	38		Fuel 2 flow total units	0 to 999	
ADI	39		Fuel 2 flow total thousands	0 to 999	
ADI	40		Fuel 2 flow total millions	0 to 999	
ADI	41		Fuel 3 flow total units	0 to 999	
ADI	42		Fuel 3 flow total thousands	0 to 999	
ADI	43		Fuel 3 flow total millions	0 to 999	
ADI	44		Channel 5 position	-6.0 to 96.0	Displayed as -60 to 960
ADI	45		Channel 6 position	-6.0 to 96.0	Displayed as -60 to 960
ADI	46		Channel 7 position	-6.0 to 90.0	Displayed as -60 to 960
ADI	47		Channel 8 position	-6.0 to 96.0	Displayed as -60 to 960
ADI	48		Not Used		
ADI	49		Not Used		
ADI	50		Not Used		
ADI	51		Fuel 4 flow total units	0 to 999	
ADI	52		Fuel 4 flow total thousands	0 to 999	
ADI	53		Fuel 4 flow total millions	0 to 999	
ADI	54		Channel 5 output	0 to 255	
ADI	55		Channel 5 input	0 to 255	
ADI	56		Channel 6 output	0 to 255	
ADI	57		Channel 6 input	0 to 255	
ADI	58		Option 1	3 to 8	See option table in manual
ADI	59		Option 77	0 to 5	See option table in manual
ADI	60		Option 90	0 to 1	See option table in manual
ADI	61		Option 91	0 to 2	See option table in manual
ADI	62		Option 92	1 to 200	See option table in manual
ADI	63		Option 93	1 to 200	See option table in manual
ADI	64		Option 94	0 to 2	See option table in manual
ADI	65		Option 95	0 to 1	See option table in manual
ADI	66		Option 96	0 to 200	See option table in manual
ADI	67		Option 97	0 to 200	See option table in manual
ADI	68		Not Used		
ADI	69		Not Used		
ADI	70		Option 100	0 to 1	See option table in manual
ADI	71		Option 101	0 to 2	See option table in manual
ADI	72		Option 102	1 to 200	See option table in manual
ADI	73		Option 103	1 to 200	See option table in manual
ADI	74		Option 104	0 to 2	See option table in manual
ADI	75		Option 105	0 to 1	See option table in manual
ADI	76		Option 106	0 to 200	See option table in manual
ADI	77		Option 107	0 to 200	See option table in manual
ADI	78		Not Used		
ADI	79		Not Used		
ADI	80		Lockout Code	0 to 255	See option table in manual
ADI	81		Option 71 Fuel 1 Type	0 to 3	0 = Fuel 1 (usually gas) 1 = Fuel 2 (usually oil) 2 = Fuel 3 (usually oil) 3 = Fuel 4 (Aux.)

NPT	NPA	UNITS	DESCRIPTION	RANGE	NOTE
ADI	82		Option 72 Fuel 2 Type	0 to 3	0 = Fuel 1 (usually gas) 1 = Fuel 2 (usually oil) 2 = Fuel 3 (usually oil) 3 = Fuel 4 (Aux.)
ADI	83		Option 73 Fuel 3 Type	0 to 3	0 = Fuel 1 (usually gas) 1 = Fuel 2 (usually oil) 2 = Fuel 3 (usually oil) 3 = Fuel 4 (Aux.)
ADI	84		Option 74 Fuel 4 Type	0 to 3	0 = Fuel 1 (usually gas) 1 = Fuel 2 (usually oil) 2 = Fuel 3 (usually oil) 3 = Fuel 4 (Aux.)
ADI	85		Option 61 Flow Units Fuel 1	0 to 4	0 = Cubic Feet 1 = Cubic Meters 2 = Kilograms 3 = Litres 4 = US Gallons
ADI	86		Option 62 Flow Units Fuel 2	0 to 4	0 = Cubic Feet 1 = Cubic Meters 2 = Kilograms 3 = Litres 4 = US Gallons
ADI	87		Option 63 Flow Units Fuel 3	0 to 4	0 = Cubic Feet 1 = Cubic Meters 2 = Kilograms 3 = Litres 4 = US Gallons
ADI	88		Option 64 Flow Units Fuel 4	0 to 4	0 = Cubic Feet 1 = Cubic Meters 2 = Kilograms 3 = Litres 4 = US Gallons
ADI	89		Fuel 1 Hours Run	0 to 9999	
ADI	90		Fuel 2 Hours Run	0 to 9999	
ADI	91		Fuel 3 Hours Run	0 to 9999	
ADI	92		Fuel 4 Hours Run	0 to 9999	
ADI	93		Fuel 1 Start ups	0 to 999	
ADI	94		Fuel 2 Start ups	0 to 999	
ADI	95		Fuel 3 Start ups	0 to 999	
ADI	96		Fuel 4 Start ups	0 to 999	
ADI	97		Air Pressure	0 to 999	See point 98 for units
ADI	98		Air Pressure Coding	8 Bit Pattern	Bit_0 = 0 = off 1 = on Bit_1 = 0 = "WG 1 = mbar Bit_2 + Bit_3 = 00 = 0 decimal places 01 = 1 decimal places 10 = 2 decimal places 11 = 3 decimal places Bit_4 =unused Bit_5 =unused Bit_6 =unused Bit_7 =unused
ADI	99		Gas Pressure	0 to 999	See point 100 for units

NPT	NPA	UNITS	DESCRIPTION	RANGE	NOTE
ADI	100		Gas Pressure Coding	8 Bit Pattern	Bit_0 = 0 = off 1 = on Bit_1 + Bit_4 = 00 = "WG 10 = mbar 01 = BAR 11 = PSI Bit_2 + Bit_3 =00 = 0 decimal places 01 = 1 decimal places 10 = 2 decimal places 11 = 3 decimal places Bit_5 =unused Bit_6 =unused Bit_7 =unused
ADI	101		Fuel Selected	0 to 3	0 = Fuel 1 (usually gas) 1 = Fuel 2 (usually oil) 2 = Fuel 3 (usually oil) 3 = Fuel 4 (Aux.)
ADI	102	%	E.G.A. O_2	0 to 20.9	Displayed as 0 to 209
ADI	103	%	E.G.A. CO_2	0 to 15	
ADI	104	ppm	E.G.A. CO	0 to 999	
ADI	105	ppm	E.G.A. NO	0 to 999	
ADI	106	ppm	E.G.A. SO_2	0 to 999	
ADI	107		E.G.A. Exhaust temp	0 to 999	
ADI	108	%	E.G.A. Efficiency	0 to 100	
ADI	109		E.G.A. Error Number	0 to 25	
ADI	110	%	E.G.A. Voltage Input	0 to 100	
ADI	111		E.G.A. Exhaust ΔT	0 to 999	
ADI	112		E.G.A. Ambient	0 to 50	
ADI	113		E.G.A. Auxiliary Temp	0 to 9999	
ADI	114		Service LEDS	8 Bit Pattern	Bit_0 to Bit_5 = 000000 = EGA requires servicing 000001 = 2 Months to service 000011 = 4 Months 000111 = 6 Months 001111 = 8 Months 011111 = 10 Months 111111 = 1 Year Bit_6 = 1 = System Fault Bit_7 = 1 = O.K. – EGA can run
ADI	115-120		Not Used		
ADI	121	Hz	Probe 1 Signal	U integer	Frequency
ADI	122	Hz	Probe 1 Reference	U integer	Frequency
ADI	123		Not Used		
ADI	124		Probe 1Version/Issue	U integer	ms/ls byte
ADI	125	Hz	Probe 2 Signal	U integer	Frequency
ADI	126	Hz	Probe 2 Reference	U integer	Frequency
ADI	127		Not Used		
ADI	128		Probe 2 Version/Issue	U integer	ms/ls byte
ADI	129		Alarm Status	U integer	0 – OK 1 – High Water 2 – 1st Low 3 – 2nd Low
ADI	130		Level Status	U integer	As Alarm Status just above
ADI	131		WL Version/Issue	U integer	ms/ls byte

NPT	NPA	UNITS	DESCRIPTION	RANGE	NOTE
ADI	132		Alarm Code	U integer	0-OK 1-2nd Low 2-Probe 1 Comms 3-Probe 2 Comms 4-Probe 1 Short 5-Probe 2 Short 6-Probe Mismatch 7-Probe 1 TC 8-Probe 2TC 9-Permanent Reset 10-Permanent Test 11-Keystuck Reset 12-Power Up EEprom 13-Bogus Eeprom State 14-Incompatible Config 15-Probe 1 Bogus Comm Data 16-Probe 2 Bogus Comm Data 17-Config Range Check Fail 18-1st Low 19-HighWater 20-Probe 1 Still Water 21-Probe 2 Still Water 22-Probes Diverse 255-OK/Reset
ADI	133		Not Used		
ADI	134	C	Steam Temp	U integer	
ADI	135	C	Feed Water Temp	U integer	
ADI	136	lb/hr	Steam Rate		USE ADF
ADI	137	Btus/lb	Heat to Steam		USE ADF
ADI	138	%	Control Element	U integer	Mod Valve close-open as percentage VSD min/max speed as percentage
ADI	139		Not Used		
ADI	140	%	Control Point Raised	U integer	0-Normal 1 to 99 - % raised between 'Control Point' and 'High Water' positions
ADI	141		Not Used		
ADI	142		Not Used		
ADI	143	lbs	Totalised Steam		USE ADF
ADI	144		Not Used		USE ADF
ADI	145	F	Steam Temp	U integer	
ADI	146	F	Feed Water Temp	U integer	
ADI	147	Kgs/hr	Steam Rate		USE ADF
ADI	148	KJ/Kg	Heat to Steam		USE ADF
ADI	149	Kgs	Totalised Steam		USE ADF
ADI	150		Not Used		
ADI	151	C	Probe 1 Temperature	U integer	
ADI	152	C	Probe 2 Temperature	U integer	
ADI	153	F	Probe 1 Temperature	U integer	
ADI	154	F	Probe 2 Temperature	U integer	

N.B. In the case of ADI/ADF points 101 through 114, values correspond to an EGA address not an MM address e.g. address 1 would correspond to E.G.A. #1 etc.

NPT	NPA	UNITS	DESCRIPTION	RANGE	NOTE
BD	01		CR Relay status	1 = burner run 0 = burner off	
BD	02		Not used		
BD	03		Not used		
BD	04		Not used		
BD	05		Not used		
BD	06		Not used		
BD	07		Not used		
BD	08		Not used		
BD	09		Temp./Pressure	0 = Temp. 1 = Press.	
BD	10		Not used		
BD	11		Not used		
BD	12		Not used		
BD	13		Not used		
BD	14		Not used		
BD	15		Not used		
BD	16		Not used		
BD	17		Not used		
BD	18		Flowmetering on	1 = yes 0 = no	
BD	19		CO displayed on F2/F3	1 = Displayed 0 = not displayed	
BD	20		Not used		
BD	21		°C or °F	1 = F 0 = C	
BD	22		Bar or PSI	1 = PSI 0 = Bar	
BD	23		External Voltage	1 = yes 0 = no	
BD	24		Not used		
BD	25		EGA optioned	1 = yes 0 = no	
BD	26		Actual up to trim threshold	1 = yes 0 = no	
BD	27		E.G.A. cooler ready	1 = yes 0 = no	
BD	28		E.G.A ambient temp OK	1 = yes 0 = no	
BD	29		Optioned to display NO	1 = yes 0 = no	
BD	30		Optioned to display SO_2	1 = yes 0 = no	
BD	31		E.G.A. ambient temp. low/high	1 = Hi 0 = Lo	
BD	32		Not used		
BD	33		Sequencing optioned	1 = yes 0 = no	
BD	34		Setpoint/Enable commands accepted	1 = yes 0 = no	
BD	35		Not used		
BD	36		Not used		
BD	37		Not used		
BD	38		Not used		
BD	39		Not used		

NPT	NPA	UNITS	DESCRIPTION	RANGE	NOTE
BD	40		Not used		
BD	41		Hand operation status	1 = Hand operation 0 = Modulating	
BD	42		Low flame hold status	1 = Low flame hold 0 = Modulating	
BD	43		Not used		
BD	44		Not used		
BD	45		Not used		
BD	46		Not used		
BD	47		MM working comms	1 = yes 0 = no	
BD	48		Input 41 set (lead boiler select)	1 = yes 0 = no	
BD	49		Lead boiler status	1 = Lead boiler. 0 = Not lead boiler.	
BD	50		'Disabled' status	1 = Disabled 0 = Enabled	
BD	57		Slave burner left/right	1 = 0 =	
BD	58-80		Not Used		
BD	81		Water Level Enabled		
BD	82		Units imp(0)metric(1)		
BD	83		Feed Water Pump ON/OFF		
BD	84-88		Not Used		
BD	89		First Out 1		
BD	90		First Out 2		
BD	91		First Out 3		
BD	92		First Out 4		
BD	93		First Out 5		
BD	94		First Out 6		
BD	95		First Out 7		
BD	96		First Out 8		
BD	97		First Out 9		
BD	98		First Out 10		
BD	99		First Out 11		
BD	100		First Out 12		
BD	101		First Out 13		
BD	102		First Out 14		
BD	103		First Out 15		
BD	104-112		Not Used		

Network point table for last (eleventh) address (read/write values from/to analog and digital units also to MM/EGA).

NPT	NPA	UNITS	DESCRIPTION	RANGE	NOTE
AI	Not used	-	-	-	-
BI	Not used	-	-	-	-
AO	Not used	-	-	-	-
BO	Not used	-	-	-	-
NPT	**NPA**	**UNITS**	**DESCRIPTION**	**RANGE**	**NOTE**
ADF	01		MM 1 new required value	for range see option 30 and 31 on MM	for units see Options 1, 51, and 52 on associated MM write only – floating point representation.
ADF	02		MM 2 new required value	for range see option 30 and 31 on MM	for units see Options 1, 51, and 52 on associated MM write only – floating point representation.
ADF	03		MM 3 new required value	for range see option 30 and 31 on MM	for units see Options 1, 51, and 52 on associated MM write only – floating point representation.
ADF	04		MM 4 new required value	see option 30 and 31 on MM	for units see Options 1, 51, and 52 on associated MM write only – floating point representation.
ADF	05		MM 5 new required value	for range see option 30 and 31 on MM	for units see Options 1, 51, and 52 on associated MM write only – floating point representation.
ADF	06		MM 6 new required value	for range see option 30 and 31 on MM	for units see Options 1, 51, and 52 on associated MM write only – floating point representation.
ADF	07		MM 7 new required value	for range see option 30 and 31 on MM	for units see Options 1, 51, and 52 on associated MM write only – floating point representation.
ADF	08		MM 8 new required value	for range see option 30 and 31 on MM	for units see Options 1, 51, and 52 on associated MM write only – floating point representation.
ADF	09		MM 9 new required value	for range see option 30 and 31 on MM	for units see Options 1, 51, and 52 on associated MM write only – floating point representation.
ADF	10		MM 10 new required value	for range see option 30 and 31 on MM	for units see Options 1, 51, and 52 on associated MM write only – floating point representation.
ADF	11		Global required value		for units see Options 1, 51, and 52 on MM 1 write only – floating point representation.

NPT	NPA	UNITS	DESCRIPTION	RANGE	NOTE
ADI	01		MM 1 new required value	for range see option 30 and 31 on MM	write only
ADI	02		MM 2 new required value	for range see option 30 and 31 on MM	write only
ADI	03		MM 3 new required value	for range see option 30 and 31 on MM	write only
ADI	04		MM 4 new required value	see option 30 and 31 on MM	write only
ADI	05		MM 5 new required value	for range see option 30 and 31 on MM	write only
ADI	06		MM 6 new required value	for range see option 30 and 31 on MM	write only
ADI	07		MM 7 new required value	for range see option 30 and 31 on MM	write only
ADI	08		MM 8 new required value	for range see option 30 and 31 on MM	write only
ADI	09		MM 9 new required value	for range see option 30 and 31 on MM	write only
ADI	10		MM 10 new required value	for range see option 30 and 31 on MM	write only
ADI	11		Global required value		write only
ADI	12		Lead boiler select	1 to 10	write only
ADI	13		Number of MM's on system	1 to 10	write only
ADI	14		Not used		
ADI	15		Not used		
ADI	16		Not used		
ADI	17		Analog unit 1 output 1	0 to 255	read and write
ADI	18		Analog unit 1 output 2	0 to 255	read and write
ADI	19		Analog unit 1 output 3	0 to 255	read and write
ADI	20		Analog unit 1 output 4	0 to 255	read and write
ADI	21		Analog unit 1 output 5	0 to 255	read and write
ADI	22		Analog unit 1 output 6	0 to 255	read and write
ADI	23		Not used		
ADI	24		Not used		
ADI	25		Analog unit 2 output 1	0 to 255	read and write
ADI	26		Analog unit 2 output 2	0 to 255	read and write
ADI	27		Analog unit 2 output 3	0 to 255	read and write
ADI	28		Analog unit 2 output 4	0 to 255	read and write
ADI	29		Analog unit 2 output 5	0 to 255	read and write
ADI	30		Analog unit 2 output 6	0 to 255	read and write
ADI	31		Not used		
ADI	32		Not used		
ADI	33		Analog unit 3 output 1	0 to 255	read and write
ADI	34		Analog unit 3 output 2	0 to 255	read and write
ADI	35		Analog unit 3 output 3	0 to 255	read and write

NPT	NPA	UNITS	DESCRIPTION	RANGE	NOTE
ADI	36		Analog unit 3 output 4	0 to 255	read and write
ADI	37		Analog unit 3 output 5	0 to 255	read and write
ADI	38		Analog unit 3 output 6	0 to 255	read and write
ADI	39		Not used		
ADI	40		Not used		
ADI	41		Analog unit 4 output 1	0 to 255	read and write
ADI	42		Analog unit 4 output 2	0 to 255	read and write
ADI	43		Analog unit 4 output 3	0 to 255	read and write
ADI	44		Analog unit 4 output 4	0 to 255	read and write
ADI	45		Analog unit 4 output 5	0 to 255	read and write
ADI	46		Analog unit 4 output 6	0 to 255	read and write
ADI	47		Not used		
ADI	48		Not used		
ADI	49		Analog unit 5 output 1	0 to 255	read and write
ADI	50		Analog unit 5 output 2	0 to 255	read and write
ADI	51		Analog unit 5 output 3	0 to 255	read and write
ADI	52		Analog unit 5 output 4	0 to 255	read and write
ADI	53		Analog unit 5 output 5	0 to 255	read and write
ADI	54		Analog unit 5 output 6	0 to 255	read and write
ADI	55		Not used		
ADI	56		Not used		
ADI	57		Analog unit 6 output 1	0 to 255	read and write
ADI	58		Analog unit 6 output 2	0 to 255	read and write
ADI	59		Analog unit 6 output 3	0 to 255	read and write
ADI	60		Analog unit 6 output 4	0 to 255	read and write
ADI	61		Analog unit 6 output 5	0 to 255	read and write
ADI	62		Analog unit 6 output 6	0 to 255	read and write
ADI	63		Not used		
ADI	64		Not used		
ADI	65		Analog unit 7 output 1	0 to 255	read and write
ADI	66		Analog unit 7 output 2	0 to 255	read and write
ADI	67		Analog unit 7 output 3	0 to 255	read and write
ADI	68		Analog unit 7 output 4	0 to 255	read and write
ADI	69		Analog unit 7 output 5	0 to 255	read and write
ADI	70		Analog unit 7 output 6	0 to 255	read and write
ADI	71		Not used		
ADI	72		Not used		
ADI	73		Analog unit 8 output 1	0 to 255	read and write
ADI	74		Analog unit 8 output 2	0 to 255	read and write
ADI	75		Analog unit 8 output 3	0 to 255	read and write
ADI	76		Analog unit 8 output 4	0 to 255	read and write
ADI	77		Analog unit 8 output 5	0 to 255	read and write
ADI	78		Analog unit 8 output 6	0 to 255	read and write
ADI	79		Not used		
ADI	80		Not used		
ADI	81		Analog unit 9 output 1	0 to 255	read and write
ADI	82		Analog unit 9 output 2	0 to 255	read and write
ADI	83		Analog unit 9 output 3	0 to 255	read and write
ADI	84		Analog unit 9 output 4	0 to 255	read and write

NPT	NPA	UNITS	DESCRIPTION	RANGE	NOTE
ADI	85		Analog unit 9 output 5	0 to 255	read and write
ADI	86		Analog unit 9 output 6	0 to 255	read and write
ADI	87		Not used		
ADI	88		Not used		
ADI	89		Analog unit 10 output 1	0 to 255	read and write
ADI	90		Analog unit 10 output 2	0 to 255	read and write
ADI	91		Analog unit 10 output 3	0 to 255	read and write
ADI	92		Analog unit 10 output 4	0 to 255	read and write
ADI	93		Analog unit 10 output 5	0 to 255	read and write
ADI	94		Analog unit 10 output 6	0 to 255	read and write
ADI	95		Not used		
ADI	96		Not used		
ADI	97		Not used		
ADI	98		Not used		
ADI	99		Not used		
ADI	100		Not used		
ADI	101		Not used		
ADI	102		Not used		
ADI	103		Not used		
ADI	104		Not used		
ADI	105		Not used		
ADI	106		Not used		
ADI	107		Not used		
ADI	108		Not used		
ADI	109		Not used		
ADI	110		Not used		
ADI	111		Not used		
ADI	112		Analog unit 1 input 1	0 to 255	read only
ADI	113		Analog unit 1 input 2	0 to 255	read only
ADI	114		Analog unit 1 input 3	0 to 255	read only
ADI	115		Analog unit 1 input 4	0 to 255	read only
ADI	116		Analog unit 1 input 5	0 to 255	read only
ADI	117		Analog unit 1 input 6	0 to 255	read only
ADI	118		Not used		
ADI	119		Not used		
ADI	120		Analog unit 2 input 1	0 to 255	read only
ADI	121		Analog unit 2 input 2	0 to 255	read only
ADI	122		Analog unit 2 input 3	0 to 255	read only
ADI	123		Analog unit 2 input 4	0 to 255	read only
ADI	124		Analog unit 2 input 5	0 to 255	read only
ADI	125		Analog unit 2 input 6	0 to 255	read only
ADI	126		Not used		
ADI	127		Not used		
ADI	128		Analog unit 3 input 1	0 to 255	read only
ADI	129		Analog unit 3 input 2	0 to 255	read only
ADI	130		Analog unit 3 input 3	0 to 255	read only
ADI	131		Analog unit 3 input 4	0 to 255	read only
ADI	132		Analog unit 3 input 5	0 to 255	read only
ADI	133		Analog unit 3 input 6	0 to 255	read only

NPT	NPA	UNITS	DESCRIPTION	RANGE	NOTE
ADI	134		Not used		
ADI	135		Not used		
ADI	136		Analog unit 4 input 1	0 to 255	read only
ADI	137		Analog unit 4 input 2	0 to 255	read only
ADI	138		Analog unit 4 input 3	0 to 255	read only
ADI	139		Analog unit 4 input 4	0 to 255	read only
ADI	140		Analog unit 4 input 5	0 to 255	read only
ADI	141		Analog unit 4 input 6	0 to 255	read only
ADI	142		Not used		
ADI	143		Not used		
ADI	144		Analog unit 5 input 1	0 to 255	read only
ADI	145		Analog unit 5 input 2	0 to 255	read only
ADI	146		Analog unit 5 input 3	0 to 255	read only
ADI	147		Analog unit 5 input 4	0 to 255	read only
ADI	148		Analog unit 5 input 5	0 to 255	read only
ADI	149		Analog unit 5 input 6	0 to 255	read only
ADI	150		Not used		
ADI	151		Not used		
ADI	152		Analog unit 6 input 1	0 to 255	read only
ADI	153		Analog unit 6 input 2	0 to 255	read only
ADI	154		Analog unit 6 input 3	0 to 255	read only
ADI	155		Analog unit 6 input 4	0 to 255	read only
ADI	156		Analog unit 6 input 5	0 to 255	read only
ADI	157		Analog unit 6 input 6	0 to 255	read only
ADI	158		Not used		
ADI	159		Not used		
ADI	160		Analog unit 7 input 1	0 to 255	read only
ADI	161		Analog unit 7 input 2	0 to 255	read only
ADI	162		Analog unit 7 input 3	0 to 255	read only
ADI	163		Analog unit 7 input 4	0 to 255	read only
ADI	164		Analog unit 7 input 5	0 to 255	read only
ADI	165		Analog unit 7 input 6	0 to 255	read only
ADI	166		Not used		
ADI	167		Not used		
ADI	168		Analog unit 8 input 1	0 to 255	read only
ADI	169		Analog unit 8 input 2	0 to 255	read only
ADI	170		Analog unit 8 input 3	0 to 255	read only
ADI	171		Analog unit 8 input 4	0 to 255	read only
ADI	172		Analog unit 8 input 5	0 to 255	read only
ADI	173		Analog unit 8 input 6	0 to 255	read only
ADI	174		Not used		
ADI	175		Not used		
ADI	176		Analog unit 9 input 1	0 to 255	read only
ADI	177		Analog unit 9 input 2	0 to 255	read only
ADI	178		Analog unit 9 input 3	0 to 255	read only
ADI	179		Analog unit 9 input 4	0 to 255	read only
ADI	180		Analog unit 9 input 5	0 to 255	read only
ADI	181		Analog unit 9 input 6	0 to 255	read only
ADI	182		Not used		

NPT	NPA	UNITS	DESCRIPTION	RANGE	NOTE
ADI	183		Not used		
ADI	184		Analog unit 10 input 1	0 to 255	read only
ADI	185		Analog unit 10 input 2	0 to 255	read only
ADI	186		Analog unit 10 input 3	0 to 255	read only
ADI	187		Analog unit 10 input 4	0 to 255	read only
ADI	188		Analog unit 10 input 5	0 to 255	read only
ADI	189		Analog unit 10 input 6	0 to 255	read only

NPT	NPA	UNITS	DESCRIPTION	RANGE	NOTE
BDREAD	01		Digital unit 1 input 1	0 or 1	see digital unit setup
BDREAD	02		Digital unit 1 input 2	0 or 1	see digital unit setup
BDREAD	03		Digital unit 1 input 3	0 or 1	see digital unit setup
BDREAD	04		Digital unit 1 input 4	0 or 1	see digital unit setup
BDREAD	05		Digital unit 1 input 5	0 or 1	see digital unit setup
BDREAD	06		Digital unit 1 input 6	0 or 1	see digital unit setup
BDREAD	07		Digital unit 1 input 7	0 or 1	see digital unit setup
BDREAD	08		Digital unit 1 input 8	0 or 1	see digital unit setup
BDREAD	09		Digital unit 1 input 9	0 or 1	see digital unit setup
BDREAD	10		Digital unit 1 input 10	0 or 1	see digital unit setup
BDREAD	11		Digital unit 1 input 11	0 or 1	see digital unit setup
BDREAD	12		Digital unit 1 input 12	0 or 1	see digital unit setup
BDREAD	13		Digital unit 1 input 13	0 or 1	see digital unit setup
BDREAD	14		Digital unit 1 input 14	0 or 1	see digital unit setup
BDREAD	15		Digital unit 1 input 15	0 or 1	see digital unit setup
BDREAD	16		Digital unit 1 input 16	0 or 1	see digital unit setup
BDREAD	17		Digital unit 2 input 1	0 or 1	see digital unit setup
BDREAD	18		Digital unit 2 input 2	0 or 1	see digital unit setup
BDREAD	19		Digital unit 2 input 3	0 or 1	see digital unit setup
BDREAD	20		Digital unit 2 input 4	0 or 1	see digital unit setup
BDREAD	21		Digital unit 2 input 5	0 or 1	see digital unit setup
BDREAD	22		Digital unit 2 input 6	0 or 1	see digital unit setup
BDREAD	23		Digital unit 2 input 7	0 or 1	see digital unit setup
BDREAD	24		Digital unit 2 input 8	0 or 1	see digital unit setup
BDREAD	25		Digital unit 2 input 9	0 or 1	see digital unit setup
BDREAD	26		Digital unit 2 input 10	0 or 1	see digital unit setup
BDREAD	27		Digital unit 2 input 11	0 or 1	see digital unit setup
BDREAD	28		Digital unit 2 input 12	0 or 1	see digital unit setup
BDREAD	29		Digital unit 2 input 13	0 or 1	see digital unit setup
BDREAD	30		Digital unit 2 input 14	0 or 1	see digital unit setup
BDREAD	31		Digital unit 2 input 15	0 or 1	see digital unit setup
BDREAD	32		Digital unit 2 input 16	0 or 1	see digital unit setup
BDREAD	33		Digital unit 3 input 1	0 or 1	see digital unit setup
BDREAD	34		Digital unit 3 input 2	0 or 1	see digital unit setup
BDREAD	35		Digital unit 3 input 3	0 or 1	see digital unit setup
BDREAD	36		Digital unit 3 input 4	0 or 1	see digital unit setup
BDREAD	37		Digital unit 3 input 5	0 or 1	see digital unit setup
BDREAD	38		Digital unit 3 input 6	0 or 1	see digital unit setup
BDREAD	39		Digital unit 3 input 7	0 or 1	see digital unit setup
BDREAD	40		Digital unit 3 input 8	0 or 1	see digital unit setup
BDREAD	41		Digital unit 3 input 9	0 or 1	see digital unit setup
BDREAD	42		Digital unit 3 input 10	0 or 1	see digital unit setup
BDREAD	43		Digital unit 3 input 11	0 or 1	see digital unit setup
BDREAD	44		Digital unit 3 input 12	0 or 1	see digital unit setup
BDREAD	45		Digital unit 3 input 13	0 or 1	see digital unit setup
BDREAD	46		Digital unit 3 input 14	0 or 1	see digital unit setup
BDREAD	47		Digital unit 3 input 15	0 or 1	see digital unit setup
BDREAD	48		Digital unit 3 input 16	0 or 1	see digital unit setup
BDREAD	49		Digital unit 4 input 1	0 or 1	see digital unit setup
BDREAD	50		Digital unit 4 input 2	0 or 1	see digital unit setup
BDREAD	51		Digital unit 4 input 3	0 or 1	see digital unit setup
BDREAD	52		Digital unit 4 input 4	0 or 1	see digital unit setup
BDREAD	53		Digital unit 4 input 5	0 or 1	see digital unit setup

NPT	NPA	UNITS	DESCRIPTION	RANGE	NOTE
BDREAD	54		Digital unit 4 input 6	0 or 1	see digital unit setup
BDREAD	55		Digital unit 4 input 7	0 or 1	see digital unit setup
BDREAD	56		Digital unit 4 input 8	0 or 1	see digital unit setup
BDREAD	57		Digital unit 4 input 9	0 or 1	see digital unit setup
BDREAD	58		Digital unit 4 input 10	0 or 1	see digital unit setup
BDREAD	59		Digital unit 4 input 11	0 or 1	see digital unit setup
BDREAD	60		Digital unit 4 input 12	0 or 1	see digital unit setup
BDREAD	61		Digital unit 4 input 13	0 or 1	see digital unit setup
BDREAD	62		Digital unit 4 input 14	0 or 1	see digital unit setup
BDREAD	63		Digital unit 4 input 15	0 or 1	see digital unit setup
BDREAD	64		Digital unit 4 input 16	0 or 1	see digital unit setup
BDREAD	65		Digital unit 5 input 1	0 or 1	see digital unit setup
BDREAD	66		Digital unit 5 input 2	0 or 1	see digital unit setup
BDREAD	67		Digital unit 5 input 3	0 or 1	see digital unit setup
BDREAD	68		Digital unit 5 input 4	0 or 1	see digital unit setup
BDREAD	69		Digital unit 5 input 5	0 or 1	see digital unit setup
BDREAD	70		Digital unit 5 input 6	0 or 1	see digital unit setup
BDREAD	71		Digital unit 5 input 7	0 or 1	see digital unit setup
BDREAD	72		Digital unit 5 input 8	0 or 1	see digital unit setup
BDREAD	73		Digital unit 5 input 9	0 or 1	see digital unit setup
BDREAD	74		Digital unit 5 input 10	0 or 1	see digital unit setup
BDREAD	75		Digital unit 5 input 11	0 or 1	see digital unit setup
BDREAD	76		Digital unit 5 input 12	0 or 1	see digital unit setup
BDREAD	77		Digital unit 5 input 13	0 or 1	see digital unit setup
BDREAD	78		Digital unit 5 input 14	0 or 1	see digital unit setup
BDREAD	79		Digital unit 5 input 15	0 or 1	see digital unit setup
BDREAD	80		Digital unit 5 input 16	0 or 1	see digital unit setup
BDREAD	81		Digital unit 6 input 1	0 or 1	see digital unit setup
BDREAD	82		Digital unit 6 input 2	0 or 1	see digital unit setup
BDREAD	83		Digital unit 6 input 3	0 or 1	see digital unit setup
BDREAD	84		Digital unit 6 input 4	0 or 1	see digital unit setup
BDREAD	85		Digital unit 6 input 5	0 or 1	see digital unit setup
BDREAD	86		Digital unit 6 input 6	0 or 1	see digital unit setup
BDREAD	87		Digital unit 6 input 7	0 or 1	see digital unit setup
BDREAD	88		Digital unit 6 input 8	0 or 1	see digital unit setup
BDREAD	89		Digital unit 6 input 9	0 or 1	see digital unit setup
BDREAD	90		Digital unit 6 input 10	0 or 1	see digital unit setup
BDREAD	91		Digital unit 6 input 11	0 or 1	see digital unit setup
BDREAD	92		Digital unit 6 input 12	0 or 1	see digital unit setup
BDREAD	93		Digital unit 6 input 13	0 or 1	see digital unit setup
BDREAD	94		Digital unit 6 input 14	0 or 1	see digital unit setup
BDREAD	95		Digital unit 6 input 15	0 or 1	see digital unit setup
BDREAD	96		Digital unit 6 input 16	0 or 1	see digital unit setup
BDREAD	97		Digital unit 7 input 1	0 or 1	see digital unit setup
BDREAD	98		Digital unit 7 input 2	0 or 1	see digital unit setup
BDREAD	99		Digital unit 7 input 3	0 or 1	see digital unit setup
BDREAD	100		Digital unit 7 input 4	0 or 1	see digital unit setup
BDREAD	101		Digital unit 7 input 5	0 or 1	see digital unit setup
BDREAD	102		Digital unit 7 input 6	0 or 1	see digital unit setup
BDREAD	103		Digital unit 7 input 7	0 or 1	see digital unit setup
BDREAD	104		Digital unit 7 input 8	0 or 1	see digital unit setup
BDREAD	105		Digital unit 7 input 9	0 or 1	see digital unit setup
BDREAD	106		Digital unit 7 input 10	0 or 1	see digital unit setup
BDREAD	107		Digital unit 7 input 11	0 or 1	see digital unit setup

NPT	NPA	UNITS	DESCRIPTION	RANGE	NOTE
BDREAD	108		Digital unit 7 input 12	0 or 1	see digital unit setup
BDREAD	109		Digital unit 7 input 13	0 or 1	see digital unit setup
BDREAD	110		Digital unit 7 input 14	0 or 1	see digital unit setup
BDREAD	111		Digital unit 7 input 15	0 or 1	see digital unit setup
BDREAD	112		Digital unit 7 input 16	0 or 1	see digital unit setup
BDREAD	113		Digital unit 8 input 1	0 or 1	see digital unit setup
BDREAD	114		Digital unit 8 input 2	0 or 1	see digital unit setup
BDREAD	115		Digital unit 8 input 3	0 or 1	see digital unit setup
BDREAD	116		Digital unit 8 input 4	0 or 1	see digital unit setup
BDREAD	117		Digital unit 8 input 5	0 or 1	see digital unit setup
BDREAD	118		Digital unit 8 input 6	0 or 1	see digital unit setup
BDREAD	119		Digital unit 8 input 7	0 or 1	see digital unit setup
BDREAD	120		Digital unit 8 input 8	0 or 1	see digital unit setup
BDREAD	121		Digital unit 8 input 9	0 or 1	see digital unit setup
BDREAD	122		Digital unit 8 input 10	0 or 1	see digital unit setup
BDREAD	123		Digital unit 8 input 11	0 or 1	see digital unit setup
BDREAD	124		Digital unit 8 input 12	0 or 1	see digital unit setup
BDREAD	125		Digital unit 8 input 13	0 or 1	see digital unit setup
BDREAD	126		Digital unit 8 input 14	0 or 1	see digital unit setup
BDREAD	127		Digital unit 8 input 15	0 or 1	see digital unit setup
BDREAD	128		Digital unit 8 input 16	0 or 1	see digital unit setup
BDREAD	129		Digital unit 9 input 1	0 or 1	see digital unit setup
BDREAD	130		Digital unit 9 input 2	0 or 1	see digital unit setup
BDREAD	131		Digital unit 9 input 3	0 or 1	see digital unit setup
BDREAD	132		Digital unit 9 input 4	0 or 1	see digital unit setup
BDREAD	133		Digital unit 9 input 5	0 or 1	see digital unit setup
BDREAD	134		Digital unit 9 input 6	0 or 1	see digital unit setup
BDREAD	135		Digital unit 9 input 7	0 or 1	see digital unit setup
BDREAD	136		Digital unit 9 input 8	0 or 1	see digital unit setup
BDREAD	137		Digital unit 9 input 9	0 or 1	see digital unit setup
BDREAD	138		Digital unit 9 input 10	0 or 1	see digital unit setup
BDREAD	139		Digital unit 9 input 11	0 or 1	see digital unit setup
BDREAD	140		Digital unit 9 input 12	0 or 1	see digital unit setup
BDREAD	141		Digital unit 9 input 13	0 or 1	see digital unit setup
BDREAD	142		Digital unit 9 input 14	0 or 1	see digital unit setup
BDREAD	143		Digital unit 9 input 15	0 or 1	see digital unit setup
BDREAD	144		Digital unit 9 input 16	0 or 1	see digital unit setup
BDREAD	145		Digital unit 10 input 1	0 or 1	see digital unit setup
BDREAD	146		Digital unit 10 input 2	0 or 1	see digital unit setup
BDREAD	147		Digital unit 10 input 3	0 or 1	see digital unit setup
BDREAD	148		Digital unit 10 input 4	0 or 1	see digital unit setup
BDREAD	149		Digital unit 10 input 5	0 or 1	see digital unit setup
BDREAD	150		Digital unit 10 input 6	0 or 1	see digital unit setup
BDREAD	151		Digital unit 10 input 7	0 or 1	see digital unit setup
BDREAD	152		Digital unit 10 input 8	0 or 1	see digital unit setup
BDREAD	153		Digital unit 10 input 9	0 or 1	see digital unit setup
BDREAD	154		Digital unit 10 input 10	0 or 1	see digital unit setup
BDREAD	155		Digital unit 10 input 11	0 or 1	see digital unit setup
BDREAD	156		Digital unit 10 input 12	0 or 1	see digital unit setup
BDREAD	157		Digital unit 10 input 13	0 or 1	see digital unit setup
BDREAD	158		Digital unit 10 input 14	0 or 1	see digital unit setup
BDREAD	159		Digital unit 10 input 15	0 or 1	see digital unit setup
BDREAD	160		Digital unit 10 input 16	0 or 1	see digital unit setup

NPT	NPA	UNITS	DESCRIPTION	RANGE	NOTE
BDREAD	161		MM 1 on/off line status	0 = off line 1 = on line	
BDREAD	162		MM 2 on/off line status	0 = off line 1 = on line	
BDREAD	163		MM 3 on/off line status	0 = off line 1 = on line	
BDREAD	164		MM 4 on/off line status	0 = off line 1 = on line	
BDREAD	165		MM 5 on/off line status	0 = off line 1 = on line	
BDREAD	166		MM 6 on/off line status	0 = off line 1 = on line	
BDREAD	167		MM 7 on/off line status	0 = off line 1 = on line	
BDREAD	168		MM 8 on/off line status	0 = off line 1 = on line	
BDREAD	169		MM 9 on/off line status	0 = off line 1 = on line	
BDREAD	170		MM 10 on/off line status	0 = off line 1 = on line	
BDREAD	171-192		Not used		
BDREAD	193		Digital unit 1 on/off line status	0 = off line 1 = on line	read only
BDREAD	194		Digital unit 2 on/off line status	0 = off line 1 = on line	read only
BDREAD	195		Digital unit 3 on/off line status	0 = off line 1 = on line	read only
BDREAD	196		Digital unit 4 on/off line status	0 = off line 1 = on line	read only
BDREAD	197		Digital unit 5 on/off line status	0 = off line 1 = on line	read only
BDREAD	198		Digital unit 6 on/off line status	0 = off line 1 = on line	read only
BDREAD	199		Digital unit 7 on/off line status	0 = off line 1 = on line	read only
BDREAD	200		Digital unit 8 on/off line status	0 = off line 1 = on line	read only
BDREAD	201		Digital unit 9 on/off line status	0 = off line 1 = on line	read only
BDREAD	202		Digital unit 10 on/off line status	0 = off line 1 = on line	read only
BDREAD	203		Not used		
BDREAD	204		Not used		
BDREAD	205		Not used		
BDREAD	206		Not used		
BDREAD	207		Not used		
BDREAD	208		Not used		
BDREAD	209		Analog unit 1 on/off line status	0 = off line 1 = on line	read only
BDREAD	210		Analog unit 2 on/off line status	0 = off line 1 = on line	read only
BDREAD	211		Analog unit 3 on/off line status	0 = off line 1 = on line	read only
BDREAD	212		Analog unit 4 on/off line status	0 = off line 1 = on line	read only
BDREAD	213		Analog unit 5 on/off line status	0 = off line 1 = on line	read only
BDREAD	214		Anal4og unit 6 on/off line status	0 = off line 1 = on line	read only

NPT	NPA	UNITS	DESCRIPTION	RANGE	NOTE
BDREAD	215		Analog unit 7 on/off line status	0 = off line 1 = on line	read only
BDREAD	216		Analog unit 8 on/off line status	0 = off line 1 = on line	read only
BDREAD	217		Analog unit 9 on/off line status	0 = off line 1 = on line	read only
BDREAD	218		Analog unit 10 on/off line status	0 = off line 1 = on line	read only

NPT	NPA	UNITS	DESCRIPTION	RANGE	NOTE
BDWRITE	1		MM 1 Enable/disable	1 = off line 0 = on line	write only
BDWRITE	2		MM 2 Enable/disable	1 = off line 0 = on line	write only
BDWRITE	3		MM 3 Enable/disable	1 = off line 0 = on line	write only
BDWRITE	4		MM 4 Enable/disable	1 = off line 0 = on line	write only
BDWRITE	5		MM 5 Enable/disable	1 = off line 0 = on line	write only
BDWRITE	6		MM 6 Enable/disable	1 = off line 0 = on line	write only
BDWRITE	7		MM 7 Enable/disable	1 = off line 0 = on line	writ only
BDWRITE	8		MM 8 Enable/disable	1 = off line 0 = on line	write only
BDWRITE	9		MM 9 Enable/disable	1 = off line 0 = on line	write only
BDWRITE	10		MM 10 Enable/disable	1 = off line 0 = on line	write only
BDWRITE	11		Not used		
BDWRITE	12		Not used		
BDWRITE	13		Not used		
BDWRITE	14		Not used		
BDWRITE	15		Not used		
BDWRITE	16		Not used		
BDWRITE	17		Digital unit 1 output 1	0 = off, 1 = on	write only
BDWRITE	18		Digital unit 1 output 2	0 = off, 1 = on	write only
BDWRITE	19		Digital unit 1 output 3	0 = off, 1 = on	write only
BDWRITE	20		Digital unit 1 output 4	0 = off, 1 = on	write only
BDWRITE	21		Digital unit 1 output 5	0 = off, 1 = on	write only
BDWRITE	22		Digital unit 1 output 6	0 = off, 1 = on	write only
BDWRITE	23		Digital unit 1 output 7	0 = off, 1 = on	write only
BDWRITE	24		Digital unit 1 output 8	0 = off, 1 = on	write only
BDWRITE	25		Digital unit 2 output 1	0 = off, 1 = on	write only
BDWRITE	26		Digital unit 2 output 2	0 = off, 1 = on	write only
BDWRITE	27		Digital unit 2 output 3	0 = off, 1 = on	write only
BDWRITE	28		Digital unit 2 output 4	0 = off, 1 = on	write only
BDWRITE	29		Digital unit 2 output 5	0 = off, 1 = on	write only
BDWRITE	30		Digital unit 2 output 6	0 = off, 1 = on	write only
BDWRITE	31		Digital unit 2 output 7	0 = off, 1 = on	write only
BDWRITE	32		Digital unit 2 output 8	0 = off, 1 = on	write only
BDWRITE	33		Digital unit 3 output 1	0 = off, 1 = on	write only
BDWRITE	34		Digital unit 3 output 2	0 = off, 1 = on	write only
BDWRITE	35		Digital unit 3 output 3	0 = off, 1 = on	write only
BDWRITE	36		Digital unit 3 output 4	0 = off, 1 = on	write only
BDWRITE	37		Digital unit 3 output 5	0 = off, 1 = on	write only
BDWRITE	38		Digital unit 3 output 6	0 = off, 1 = on	write only
BDWRITE	39		Digital unit 3 output 7	0 = off, 1 = on	write only
BDWRITE	40		Digital unit 3 output 8	0 = off, 1 = on	write only
BDWRITE	41		Digital unit 4 output 1	0 = off, 1 = on	write only
BDWRITE	42		Digital unit 4 output 2	0 = off, 1 = on	write only
BDWRITE	43		Digital unit 4 output 3	0 = off, 1 = on	write only
BDWRITE	44		Digital unit 4 output 4	0 = off, 1 = on	write only
BDWRITE	45		Digital unit 4 output 5	0 = off, 1 = on	write only

NPT	NPA	UNITS	DESCRIPTION	RANGE	NOTE
BDWRITE	46		Digital unit 4 output 6	0 = off, 1 = on	write only
BDWRITE	47		Digital unit 4 output 7	0 = off, 1 = on	write only
BDWRITE	48		Digital unit 4 output 8	0 = off, 1 = on	write only
BDWRITE	49		Digital unit 5 output 1	0 = off, 1 = on	write only
BDWRITE	50		Digital unit 5 output 2	0 = off, 1 = on	write only
BDWRITE	51		Digital unit 5 output 3	0 = off, 1 = on	write only
BDWRITE	52		Digital unit 5 output 4	0 = off, 1 = on	write only
BDWRITE	53		Digital unit 5 output 5	0 = off, 1 = on	write only
BDWRITE	54		Digital unit 5 output 6	0 = off, 1 = on	write only
BDWRITE	55		Digital unit 5 output 7	0 = off, 1 = on	write only
BDWRITE	56		Digital unit 5 output 8	0 = off, 1 = on	write only
BDWRITE	57		Digital unit 6 output 1	0 = off, 1 = on	write only
BDWRITE	58		Digital unit 6 output 2	0 = off, 1 = on	write only
BDWRITE	59		Digital unit 6 output 3	0 = off, 1 = on	write only
BDWRITE	60		Digital unit 6 output 4	0 = off, 1 = on	write only
BDWRITE	61		Digital unit 6 output 5	0 = off, 1 = on	write only
BDWRITE	62		Digital unit 6 output 6	0 = off, 1 = on	write only
BDWRITE	63		Digital unit 6 output 7	0 = off, 1 = on	write only
BDWRITE	64		Digital unit 6 output 8	0 = off, 1 = on	write only
BDWRITE	65		Digital unit 7 output 1	0 = off, 1 = on	write only
BDWRITE	66		Digital unit 7 output 2	0 = off, 1 = on	write only
BDWRITE	67		Digital unit 7 output 3	0 = off, 1 = on	write only
BDWRITE	68		Digital unit 7 output 4	0 = off, 1 = on	write only
BDWRITE	69		Digital unit 7 output 5	0 = off, 1 = on	write only
BDWRITE	70		Digital unit 7 output 6	0 = off, 1 = on	write only
BDWRITE	71		Digital unit 7 output 7	0 = off, 1 = on	write only
BDWRITE	72		Digital unit 7 output 8	0 = off, 1 = on	write only
BDWRITE	73		Digital unit 8 output 1	0 = off, 1 = on	write only
BDWRITE	74		Digital unit 8 output 2	0 = off, 1 = on	write only
BDWRITE	75		Digital unit 8 output 3	0 = off, 1 = on	write only
BDWRITE	76		Digital unit 8 output 4	0 = off, 1 = on	write only
BDWRITE	77		Digital unit 8 output 5	0 = off, 1 = on	write only
BDWRITE	78		Digital unit 8 output 6	0 = off, 1 = on	write only
BDWRITE	79		Digital unit 8 output 7	0 = off, 1 = on	write only
BDWRITE	80		Digital unit 8 output 8	0 = off, 1 = on	write only
BDWRITE	81		Digital unit 9 output 1	0 = off, 1 = on	write only
BDWRITE	82		Digital unit 9 output 2	0 = off, 1 = on	write only
BDWRITE	83		Digital unit 9 output 3	0 = off, 1 = on	write only
BDWRITE	84		Digital unit 9 output 4	0 = off, 1 = on	write only
BDWRITE	85		Digital unit 9 output 5	0 = off, 1 = on	write only
BDWRITE	86		Digital unit 9 output 6	0 = off, 1 = on	write only
BDWRITE	87		Digital unit 9 output 7	0 = off, 1 = on	write only
BDWRITE	88		Digital unit 9 output 8	0 = off, 1 = on	write only
BDWRITE	89		Digital unit 10 output 1	0 = off, 1 = on	write only
BDWRITE	90		Digital unit 10 output 2	0 = off, 1 = on	write only
BDWRITE	91		Digital unit 10 output 3	0 = off, 1 = on	write only
BDWRITE	92		Digital unit 10 output 4	0 = off, 1 = on	write only
BDWRITE	93		Digital unit 10 output 5	0 = off, 1 = on	write only
BDWRITE	94		Digital unit 10 output 6	0 = off, 1 = on	write only
BDWRITE	95		Digital unit 10 output 7	0 = off, 1 = on	write only
BDWRITE	96		Digital unit 10 output 8	0 = off, 1 = on	write only

6.20 Other Information and Illustrations

6.20.1 Loop Back Test

A facility exists which enables the hardware connection to the RS232 PC port and the RS422 port to be checked.

On the dual inline switch (switch bank 2) set way 5 on and all other ways off.

Any character on the receive line is then echoed back immediately on the transmit line.

This facility is intended to be used in conjunction with a terminal emulator, such as Hyperterminal (hypertrm.exe) which is included with Windows.

The communications settings should be as follows:

Bits per second: 9600
Data bits: 8
Parity: none
Stop bits: 1
Flow control: None (i.e. no hardware or software flow control)

Full duplex.

6.20.2 Setting up the Hyperterminal for the DTI echo test

Connect the DTI to the PC via a serial lead.

Click on the Windows start button and choose Run.

Type hypertrm.exe in the Open box and press Enter.

Wait for the Connection Description box to appear.

In the name box type Autoflame DTI Echo Test and click OK.

Under Connect Using choose Direct to COM1.

Use the following Port Settings for COM1 and choose OK:

Bits per second (baud rate): 9600
Data bits: 8
Parity: none
Stop bits: 1
Flow control: None (i.e. no hardware or software flow control)
(Full duplex if necessary)

6.20.2 Communication Interfaces

This page is for information only.

RS 232

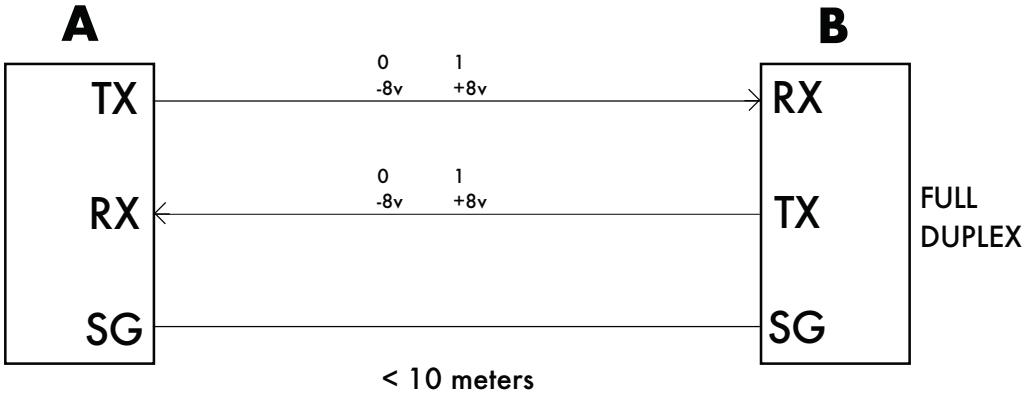

RS 422

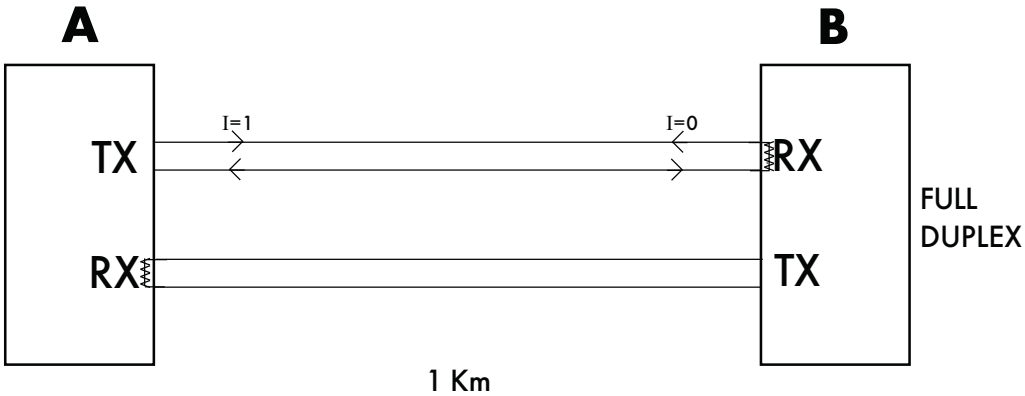

RS 485

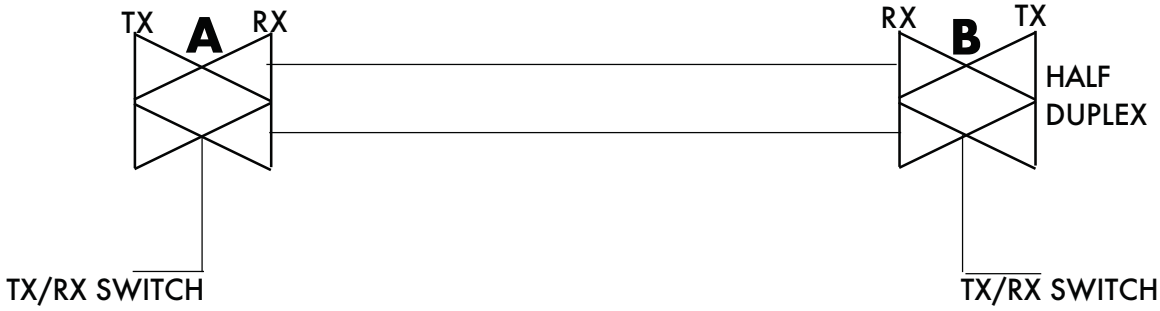

Example of a network

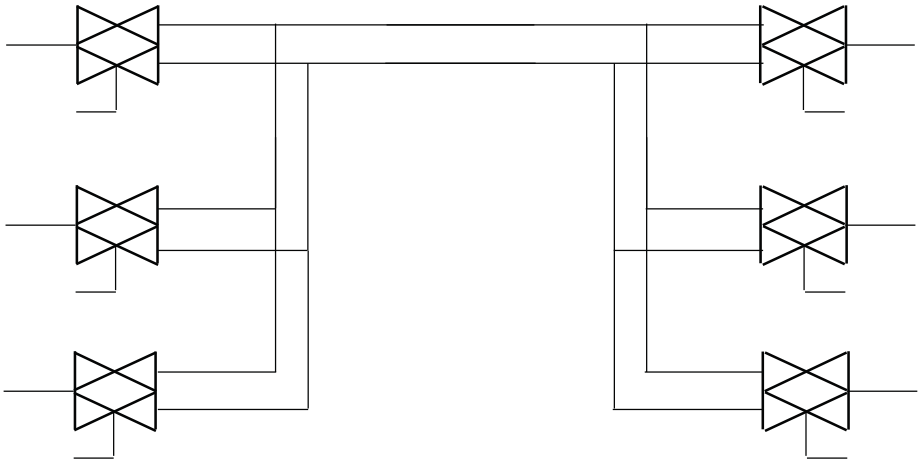

SECTION 7: APPLICATION POSSIBILITIES

7.1 PRESSURE JET/GUN TYPE BURNERS

7.2 FLUE GAS RECIRCULATION CONTROL

7.3 FEEDWATER CONTROL

7.4 WATER INJECTION

7.5 COMPLETE MK7 MM SYSTEM

7.6 COMPLETE MINI MK7 MM SYSTEM

7.7 CHANGEOVER ON THE FLY

7.7.1 Hardware Requirements

7.7.2 Operational Components

7.7.3 Important Options/Parameters to Set

7.7.4 COF Operation

7.7.5 COF Lockout Messages

7.8 NO PRE-PURGE

7.8.1 Operation

7.9 CONTINOUS PILOT

7.9.1 Operation

7.1 PRESSURE JET/GUN TYPE BURNERS

The MM system is basically a fuel/air ratio control designed to improve the energy efficiency and control of a standard pressure jet or rotary burner. The ability to control up to 6 channels, however, greatly expands the areas in which it can be used and any application in which it is necessary to precisely mix fuel and air from up to 6 sources is a possibility.

The simplest system requiring only two servo motors for control is the pressure jet/gun type burner. The energy saving benefits comes from several sources:

- Elimination of mechanical hysteresis due to cams and linkages.

- Precise control of the fuel/air ratio throughout the combustion range without the compromises which limit a cam.

- Control of the setpoint to ±1°C. (± 2°F.) or ±1.5 psi via the PID controller, eliminating the wastage or pressure higher than required. This is set internally within the MM controller and is a 4-term PID loop controller.

- No compromise required when changing between fuels since the air/fuel ratio for each is completely separate.

- The ability to maximise the turndown capability of the burner without compromising the start position. This is achieved by the ability to use a golden start position.

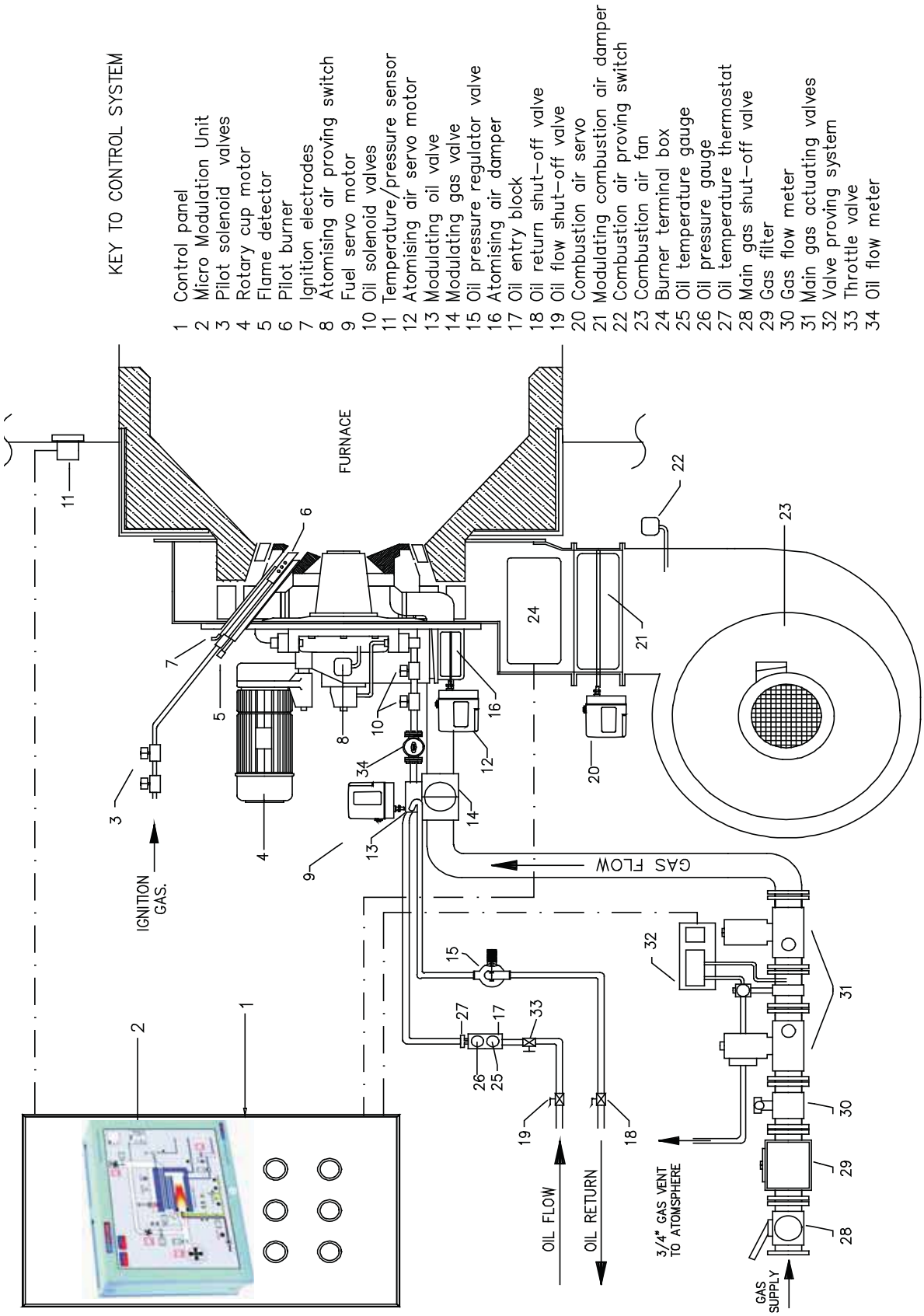
KEY TO CONTROL SYSTEM
1 Control panel
2 Micro Modulation Unit
3 Pilot solenoid valves
4 Rotary cup motor
5 Flame detector
6 Pilot burner
7 Ignition electrodes
8 Atomising air proving switch
9 Fuel servo motor
10 Oil solenoid valves
11 Temperature/pressure sensor
12 Atomising air servo motor
13 Modulating oil valve
14 Modulating gas valve
15 Oil pressure regulator valve
16 Atomising air damper
17 Oil entry block
18 Oil return shut-off valve
19 Oil flow shut-off valve
20 Combustion air servo
21 Modulating combustion air damper
22 Combustion air proving switch
23 Combustion air fan
24 Burner terminal box
25 Oil temperature gauge
26 Oil pressure gauge
27 Oil temperature thermostat
28 Main gas shut-off valve
29 Gas filter
30 Gas flow meter
31 Main gas actuating valves
32 Valve proving system
33 Throttle valve
34 Oil flow meter
FURNACE
IGNITION GAS.
GAS FLOW
OIL FLOW
OIL RETURN
3/4" GAS VENT TO ATOMSPHERE
GAS SUPPLY

7.2 FLUE GAS RECIRCULATION CONTROL

The MM system is basically a fuel/air ratio control designed to improve the energy efficiency and control of a standard pressure jet or rotary burner. The ability to control up to 6 channels, however, greatly expands the areas in which it can be used and any application in which it is necessary to precisely mix fuel and air from up to 6 sources is a possibility.

The additional channels can be used to control a recirculation damper which is a common method in the control of NOx production. As with most forms of NOx control this method reduces the temperature in the combustion chamber and hence reduces thermal efficiency. Use of an MM will minimise the excess air to the burner which itself reduces NOx and will also affect some of this loss of efficiency.

7.3 FEEDWATER CONTROL

The MM system is basically an air/fuel ratio control designed to improve the energy efficiency and control of a standard pressure jet or rotary burner. The ability to control up to 6 channels however greatly expands the areas in which it can be used and any application in which it is necessary to precisely mix fuel and air from up to 6 sources is a possibility.

One channel could be used to control the feedwater valve.

7.4 WATER INJECTION

The MM system is basically an air/fuel ratio control designed to improve the energy efficiency and control of a standard pressure jet or rotary burner. The ability to control up to 6 channels however greatly expands the areas in which it can be used and any application in which it is necessary to precisely mix fuel and air from up to 6 sources is a possibility.

One of the channels could be used to control water injection.

7.5 COMPLETE MK7 MM SYSTEM

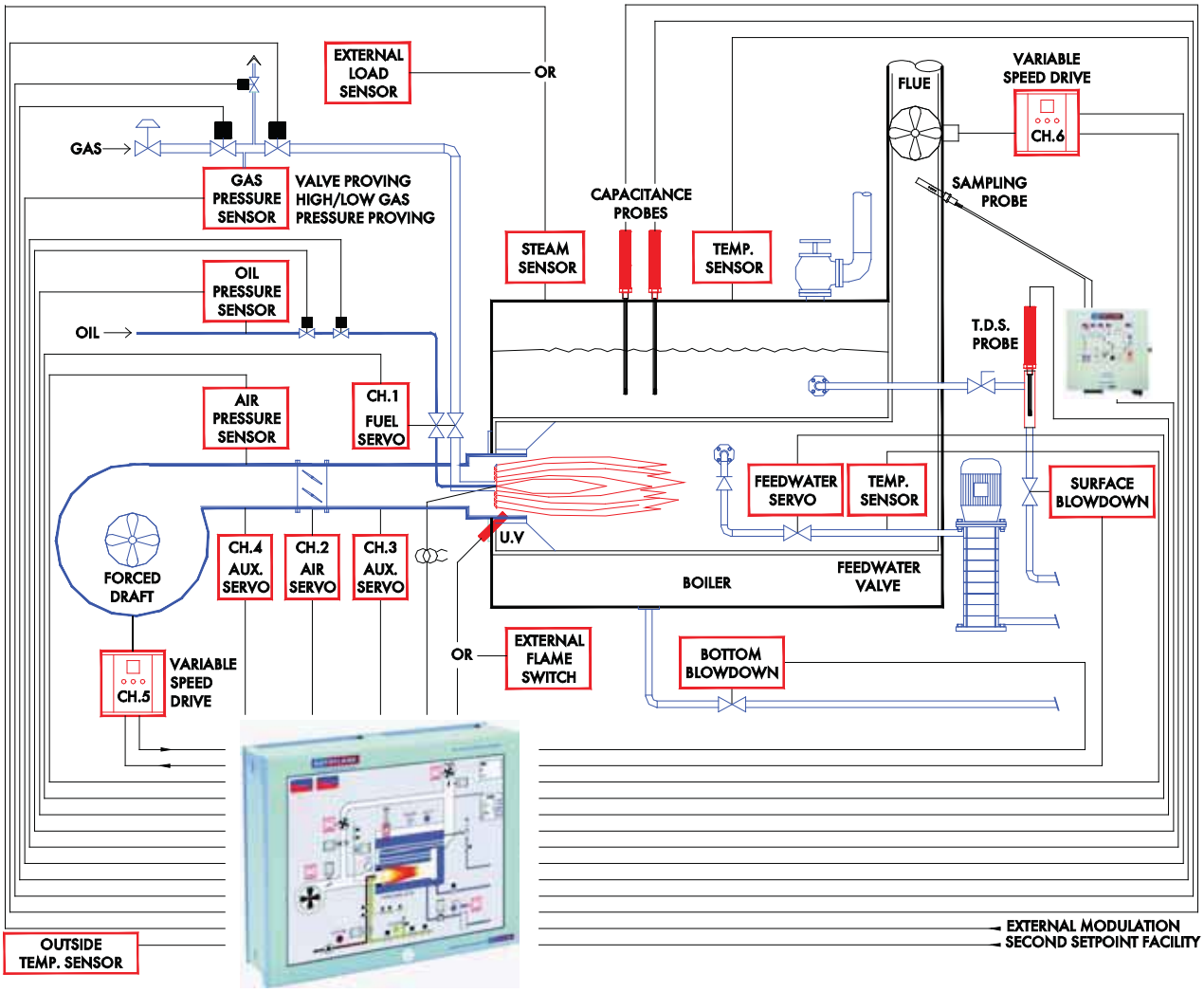

7.6 COMPLETE MINI MK7 MM SYSTEM

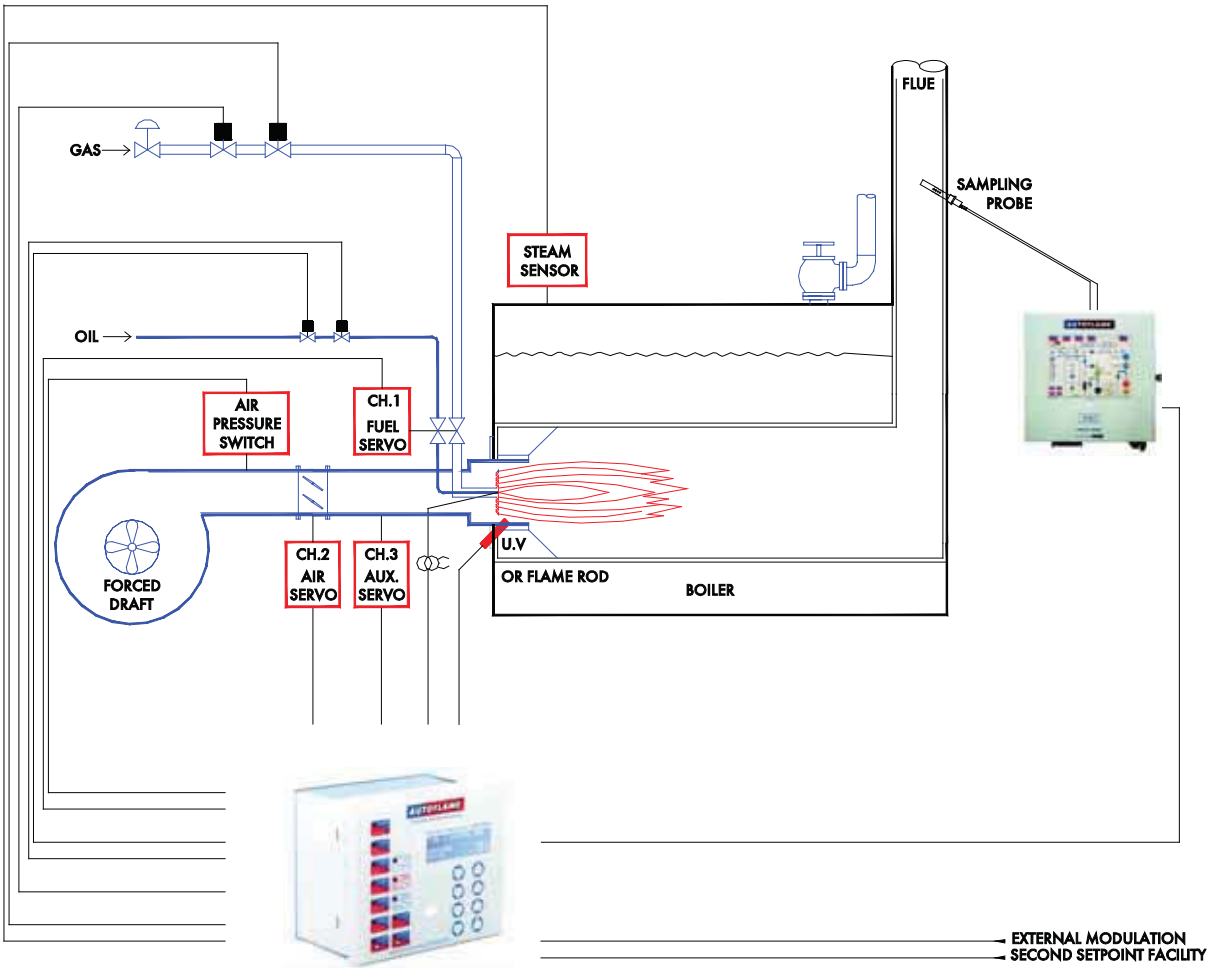

7.7 CHANGEOVER ON THE FLY

Changeover on the fly software enables up to two fuels to be accommodated (not four as on the standard Mk7 product) and if two fuels are commissioned they can run independently or simultaneously. Changing between the fuels is possible without the need to shutdown the burner. The system and burner suitability must be considered for each COF application.

7.7.1 Hardware Requirements

Autoflame manufactured control panel housing the following units:

- Mk7 MM Evolution (with COF software)
- Digital IO unit modified for COF (software- 1.00 modified for COF)

The digital IO must be set with identification #1 (use the PC & IO setup lead and follow the instructions in section 6 of the technical manual- if any other identification number is set then the communications to the MM will fail). The MM identification number (Option 33) can be set to any number as usual.

Communications to the digital IO module is via the twin burner Terminals 23/24 (so twin burner operation is not possible).

7.7.2 Operational Components

Terminal 89 input selects fuel 1
Terminal 90 input selects fuel 2
Terminal 91 input selects simultaneous firing
Terminal 92 input is unused

Three or four servomotors must be used and all servomotors must be connected at all times.

- Channel 1 must be fuel 1, e.g. gas
- Channel 2 must be air
- Channel 3 must be fuel 2, e.g. oil

A VSD can be optioned. If a VSD is optioned then the low flame positions/settings on the drive must be the same for both fuels. Fuel and air positions may vary.

An EGA (Exhaust Gas Analyser) can be used but trim can only be selected on channel 2 (air damper) and no trim is available on channel 5 (VSD).

COF will not operate if the target 'change over' curve is not commissioned.

The fuel flow metering or 10 point load index entry is referenced to channel 2 (air).

A type 1 c/o (changeover) sequence is where the air opens then the valve opens.
A type 2 c/o is where the valve closes then the air closes.

7.7.3 Important Options/Parameters to Set

- Option 111 must be set = 0 (interrupted pilot)
- Option 8 must be set = 2 (i.e. 3 channels)
- Option 69 must be set = 1 (channel 3 at close for purge position)
- Parameter 108 = 0 (pilot off during fuel 2 burn)
- Parameter 108 = 1 (pilot on during fuel 2 burn)

7.7.4 COF Operation

Only 1 fuel may be selected during burner start-up. If more than 1 input is selected the MM will reset.

Once the burner is firing/modulating the appropriate indication output will be set (during commissioning the indication outputs do not operate). Once an indication output is set, COF may be carried out. A 'non- current' input must be set for 5 seconds for it to be recognised. Once recognised it must not reset or the MM will reset causing the burner to stop. The 'current' input may be deselected any time from now on. The changeover will take place. Once the burner is modulating on the new fuel the inputs are looked at again. If two inputs are left permanently set, changeovers will occur repeatedly.

If a COF is attempted and the target fuel 'fuel available' input is reset a COF will not be initiated.
If a fuel is burning and its 'fuel available' input becomes reset then a lockout is set.
The fuel available input for the selected fuel must be set at all times this fuel is selected.

The COF input has to be set for the COF operation to take place. When the COF input is set there is a 5 second filter time on the fuel select inputs to allow the inputs to be switched. When the COF input is reset, the fuel select inputs respond as a standard Mk7 and stop the burner immediately when deselected. The burner will restart when a fuel is next selected.

The proof of closure inputs must be set when a valve is closed and reset when open. Both inputs are monitored regardless of which fuel is selected.

7.7.5 COF Lockout Messages

Dio ignition check

- Input 1 of the digital IO (monitoring the ignition relay) is not in the correct state– the output/relay is apparently on when should be off (or vice versa).

Dio pilot check

- Input 2 of the digital IO (monitoring the pilot relay) is not in the correct state– the output/relay is apparently on when should be off (or vice versa).

Dio fuel 1 check

- Input 3 of the digital IO (monitoring the fuel 1 relay) is not in the correct state– the output/relay is apparently on when should be off (or vice versa).

Dio fuel 2 check

- Input 4 of the digital IO (monitoring the fuel 2 relay) is not in the correct state– the output/relay is apparently on when should be off (or vice versa).

Dio off line

- There is no communication between the Mk6 control & the digital IO unit.

Fuel 1 loss

- Fuel 1 available (digital IO input #15) is/has become reset when this fuel selected.

Fuel 2 loss

- Fuel 2 available (digital IO input #16) is/has become reset when this fuel selected.

Fuel 1 cpi

- The cpi (poc) input for fuel 1 (digital IO input #5) is not in the correct state.

Fuel 2 cpi

- The cpi (poc) input for fuel 2 (digital IO input #6) is not in the correct state.

7.8 NO PRE-PURGE

In the Mk7 and Mini Mk7 MM it is possible to allow the burner to start-up as quickly as possible without the need for a pre-purge, i.e. the pre-purge is bypassed. The major advantage of this control means that the overall boiler efficiency is increased by minimising the heat loss to the stack during a purge cycle. Also, the burner starts-up quicker so reaching setpoint in a reduced time is achieved. According to the EN676 European regulation, the burner is allowed to restart without a pre-purge if the burner has recycled due to operational temperature/pressure or when the burner on-off switch has been cycled, i.e. loss of input on Terminal 53. When the burner is stopped by a lockout then this procedure is not allowed and the burner will have to start-up in the normal manner with a pre-purge. In order for no pre-purge to be allowed, there is one thing that needs to take place and that is that before the start without a pre-purge, valve proving (VPS) must take place and finish successfully. If this VPS operation is successful and all of the valves are checked then the burner may start-up without a pre-purge.

7.8.1 Operation

In order to initiate the no pre-purge feature, Option and Parameter 143 must be set to a value of 1. During the first start-up the burner will start in the usual manner and a pre-purge will be initiated. Until the complete commissioning program has been entered and the burner started successfully, the burner will start-up every time with the VPS operation and a pre-purge.

Once fully commissioned and the burner started successfully then the system will now allow the no pre-purge feature to be initiated. If the burner goes above its setpoint and so turns off in a controlled manner, or if the input on Terminal 53 (burner on/off switch) is lost, then the next time the burner starts-up, it will go through the VPS operation and then light off without a pre-purge, i.e. the burner has shutdown in a controlled manner and the gas valves have been checked for integrity.

If a lockout occurs or the burner shuts down in an abrupt manner, i.e. loss of power to the unit, then the next time the burner starts-up a complete purge will be initiated.

According to the EN 676 regulation, the burner is only allowed to work in this manner if option and Parameter 129 is set to a value of 0, i.e. the VPS must operate before the burner starts–up.

The start sequence without pre-purge is as follows. Firstly the system goes through its internal tests and relay checks as per the usual start-up sequence. Then the call for heat on Terminal 57 activates and the system will go through the VPS operation. If this operation is successful then the Mk7 will drive the channels to the light off or start position. Once all channels reach the start position then the burner will light off in the usual manner.

It is important to note that this control logic only conforms with European regulations at present and does not conform with NFPA and UL.

7.9 CONTINOUS PILOT

In the Mk7 MM it is possible to enable continuous pilot which means that when the burner goes above its switching i.e. off differential , then the burner continues to fire with only the pilot valves energised.

This has been incorporated into the following software versions and is not in the standard Mk7 software control. Please contact Autoflame Engineering Ltd for such applications.

BC 17.31
MM 17.51
DI 7.31

7.9.1 Operation

To set up this facility Option 9 must be set to a value of 3 or 4. This means that once the boiler gets up to temperature (pressure), the burner will not switch off but will in fact switch to pilot firing. These additional settings work in the same way as settings 1 and 2 but enable this continuous pilot operation. If Option #9 is set to 3 then the burner goes to pilot firing at an offset above setpoint (set in Option 10) and will switch back to main flame a number of degrees below the setpoint as set in Option 11. If Option 9 is set to 4 then the burner goes to pilot firing at an offset above setpoint (Option 10) and will switch back to main flame a number of degrees above setpoint as set in Option 11. When you put Option 9 to a value of 3 or 4 then an external on/off thermostat or pressure switch must be installed.

In the situation when the burner switches back to pilot flame then the burner will open the pilot valves and after the same time as the second safety time (Option 116), the burner will close its main valves. Also during the hot standby position the gas pressure is checked by the gas sensor, so it is important that the main valves and pilot valves are connected with a small measuring pipeline. When the burner comes back to the point when it should go back to main flame the main fuel valves will open and after the second safety time the pilot valves will be closed and the normal operation will start again.

SECTION 8: ANCILLARY & PERIPHERAL EQUIPMENT

8.0 VALVE SPECIFICATIONS

8.0.1 Oil Valve Selection

8.1 SCREWED GAS VALVES (SMALL POSITIONING MOTOR)

8.2 FLANGED GAS VALVES (SMALL POSITIONING MOTOR)

8.3 FLANGED GAS VALVES (LARGE POSITIONING MOTOR)

8.3.3 Screwed Gas Valve + Oil Valve + Small positioning motor

8.3.4 Flanged Gas Valve + Oil Valve + Small positioning motor

8.3.6 Gas Valve Pressure Drop Graph

8.4 TYPE 1/2/5/6/8/9 OIL CONTROL VALVES

8.5 TYPE 3/4/7 OIL CONTROL VALVES

8.6 OIL CONTROL VALVE FLOW CHARACTERISTICS

8.6.1 Type 1 Spillback Graph

8.6.2 Type 2 Spillback Graph

8.6.3 Type 4 Spillback Graph

8.6.4 Type 5 Spillback Graph

8.6.5 Type 3 Metering Graph

8.6.6 Type 6 Metering Graph

8.6.7 Type 8 Metering Graph

8.6.8 Type 9 Metering Graph

8.7 SMALL POSITIONING MOTOR

8.8 LARGE POSITIONING MOTOR

8.9 TEMPERATURE DETECTOR

8.10 INDUSTRIAL POSITIONING MOTOR

8.10.0 Overview

8.10.1 External Drawings

8.10.2 Specification

8.10.3 Installation

8.10.4 Manual Operation

8.10.5 Troubleshooting

8.0 VALVE SPECIFICATIONS

When using high viscosity low temperature fuel oils through smaller valves, turbulent flow characteristics can reduce volume throughput significantly.

All flow pressure graphs published for oil valves are using light distillate oil @ 20°C and a viscosity of 5 centistokes.

Autoflame will carry out flow characteristic tests on specific valves against customer fuel/viscosity and temperature specifications. Price on application.

Standard oil valve build execution is stainless steel valve body with stainless steel bobbin. The top and bottom closing plates are manufactured out of aluminium.

All valves can be supplied in non-standard material at extra cost. Price on application.

The standard execution of the gas valve is an aluminium body with stainless steel metering disk and stem. The gas valves can also be supplied for corrosive/contaminated fuels in all stainless steel construction. Price on application.

The standard execution of the FGR valve (flue gas recirculation) is an stainless steel body with stainless steel disk and stem but is dependent upon the application. Two grease nipple points are used for easy service of the FGR valves.

Maximum pressure is 350 psi (oil valves); 10 psi (GV4 gas valves); 25psi (GVF gas valves).

For further information please contact Autoflame sales.

8.0.1 Oil Valve Selection

8.0.1.1 Spillback/Bypass Application

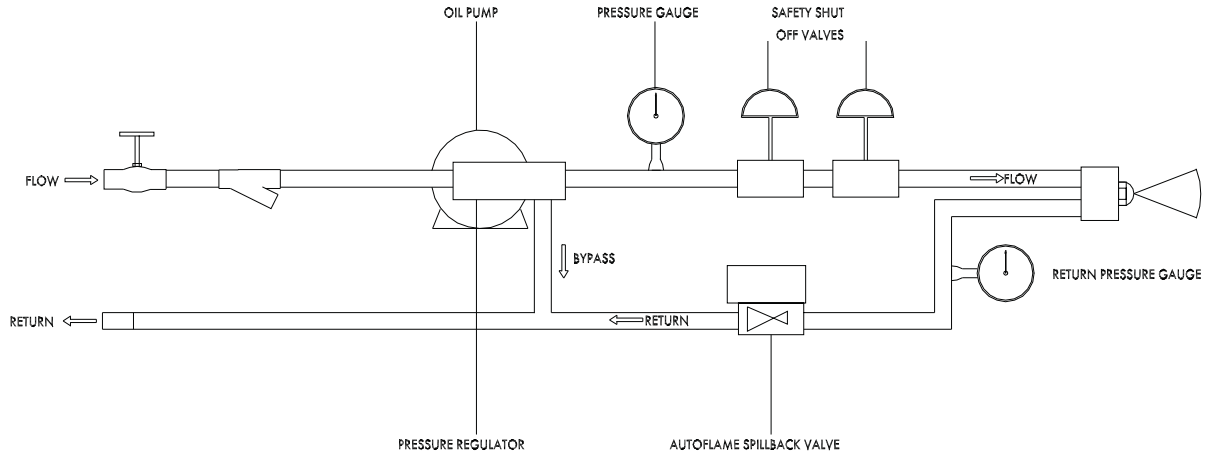

INFORMATION REQUIRED	ACTUAL DATA	TYPICAL DATA
OIL PUMP FLOW:		1.6X NOZZLE SIZE
OIL PUMP PRESSURE::		350 - 400 PSI
SOLENOID DETA P. (BOTH VALVES):		4 TO 20 PSI
NOZZLE MAXIMUM WORKING PRESSURE:		300 PSI
NOZZLE SIZE (IBS/HR)		1000 IB/HR
RETURN OIL PRESSURE AT LOW FIRE:		80 TO 120 PSI
OIL TYPE: #2,#4 OR #6		#2

WHEN SIZING THE OIL VALVE FOR BYPASS SYSTEMS. WE HAVE TO DETERMINE THE AMOUNT OF OIL BEING RETURNED TO THE PUMP/TANK AT LOW FIRE AND AT WHAT PRESSURE. THIS INFORMATION IS THEN USED AGAINST THE VALVE CHARTS IN THE AUTOFLAME MANUAL.
AT LOW FIRE IS WHEN THE VALVE IS MOST OPEN AND PRODUCING MAXIMUM FLOW.

BASED ON THE ABOVE EXAMPLE:

100O IB/HR X 1.6	=	1600 IB/HR
LOW FIRE OIL REQUIREMENT	=	250 IB/HR (BASED AT 4 : 1 TURN DOWN. 1000 / 4)
1600 IB/HR - 250 IB/HR	=	1350 IB/HR
SPILLBACK OIL FLOW	=	1350 IB/HR @ 100 PSI

THEREFORE THE CORRECT VALVE WILL BE THE TYPE: 5

For assistance, fill in the actual data and return to Autoflame.

8.0.1.2 Metering/Simplex Application

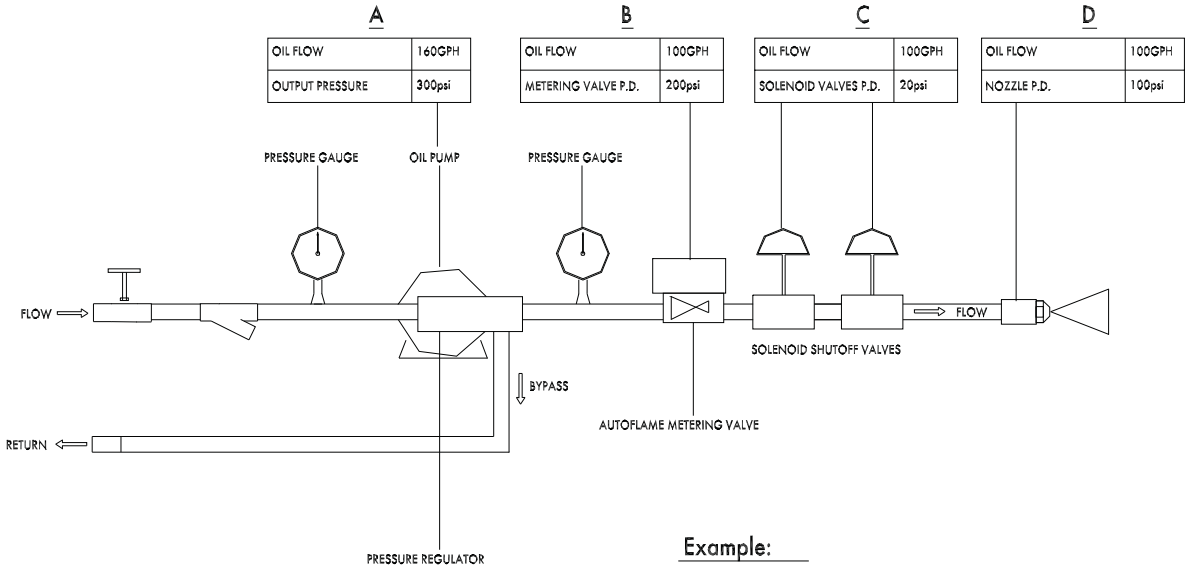

Example:

Known parameters are pump max flow and pressure output

Now determine the flow and pressure drop across the nozzle

The difference between VALUE A, C and D
is what is applied to the autoflame charts

From above example 300 - 100 - 20 = 180

From Autoflame charts in section 8.6.1 - 8.6.8
select valve that gives flow of 100GPH @ 180psi P.D.

VALVE SIZING METHOD

THE FOLLOWING INFORMATION MUST BE COMPLETED BEFORE THE OIL VALVE CAN BE CORRECTLY SIZED

FILL IN BOX "A" ABOVE
FILL IN BOX "C" ABOVE
FILL IN BOX "D" ABOVE

A - C - D = B

THE RESULTS OF BOX B NOW MUST BE APPLIED TO THE CHARTS IN THE AUTOFLAME MANUAL

For assistance, fill in the fields below and return to Autoflame:

A: _____

C: _____

D: _____

8.1.1 Gas Valve- threaded (metric)- small positioning motor

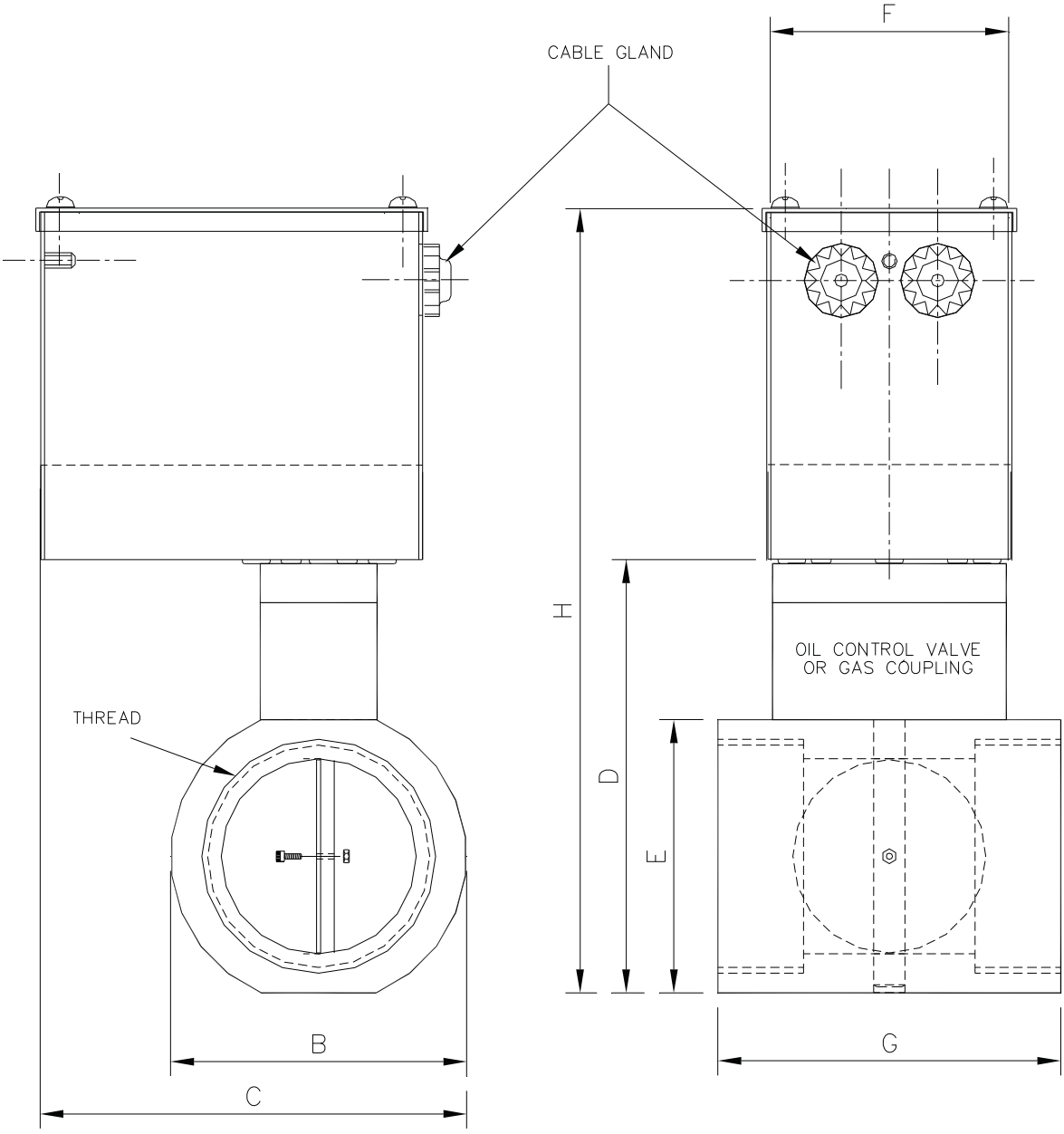

PART No.	A	B	C	D	E	F	G	H	VALVE SIZE
GV42521	100	54	97	85	45	65	88	180	25 (1")
GV44022	100	67	103.5	100	60	65	88	195	40 (1.5")
GV45023	100	76	108	110	70	65	88	205	50 (2")
GV46524	100	90	115	124	85	65	88	220	65 (2.5")
GV48025	100	105	123	140	100	65	88	235	80 (3")

ALL MEASUREMENTS IN MILLIMETRES UNLESS STATED OTHERWISE.

8.1.2 Gas Valve- threaded (imperial)- small positioning motor

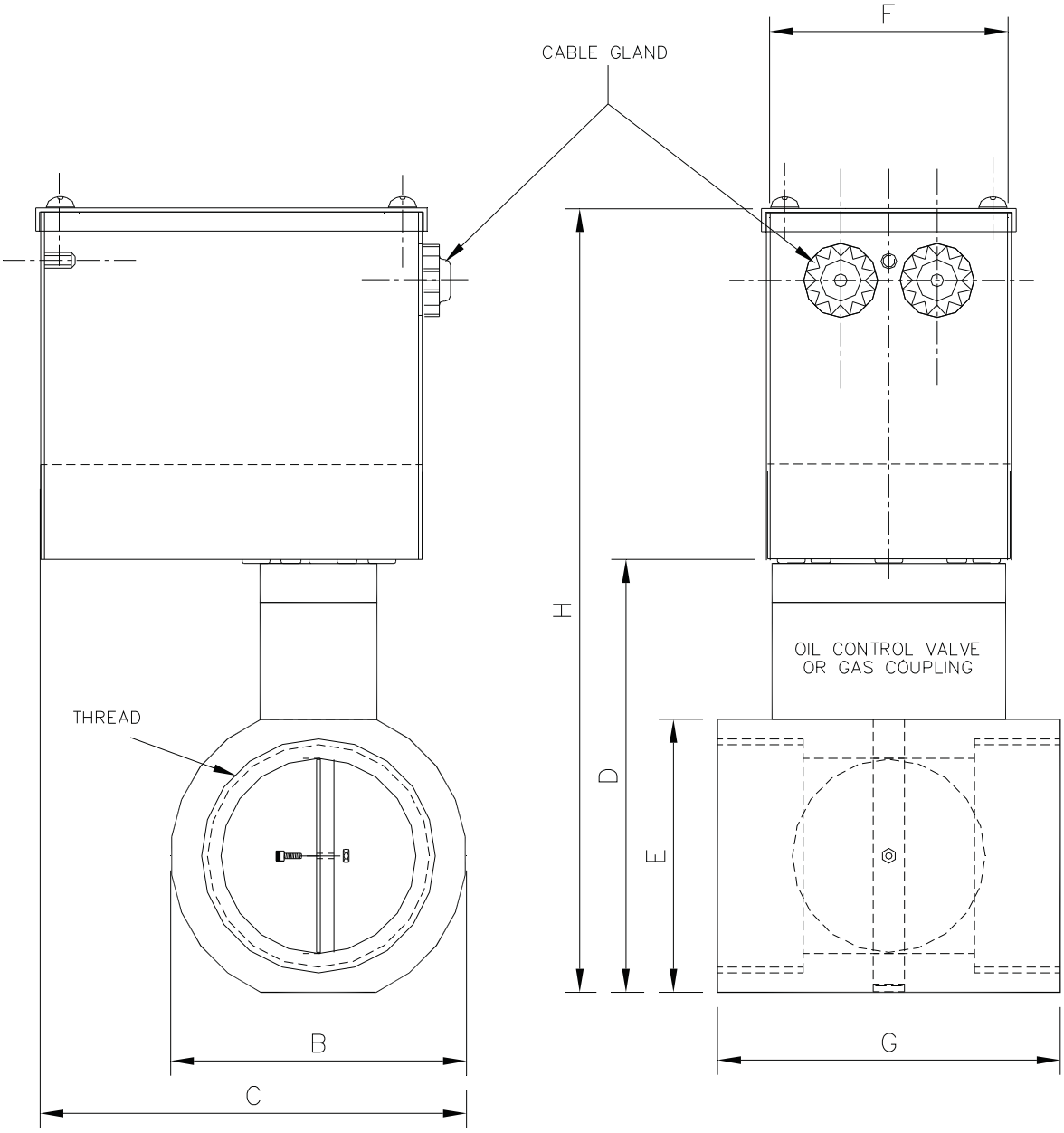

PART No.	A	B	C	D	E	F	G	H	VALVE SIZE
GV42521	4"	2.125"	3.80"	3.35"	1.75"	2.56"	3.47"	7.09"	1"
GV44022	4"	2.64"	4.08"	4"	2.375"	2.56"	3.47"	7.67"	1.5"
GV45023	4"	3"	4.25"	4.375"	2.75"	2.56"	3.47"	8.07"	2"
GV46524	4"	3.50"	4.50"	5"	3.35"	2.56"	3.47"	8.66"	2.5"
GV48025	4"	4.125"	4.85"	5.50"	4"	2.56"	3.47"	9.25"	3"

ALL MEASUREMENTS IN IMPERIAL UNLESS STATED OTHERWISE.

8.2.1 Gas Valve- flanged (30mm thick metric)- small positioning motor

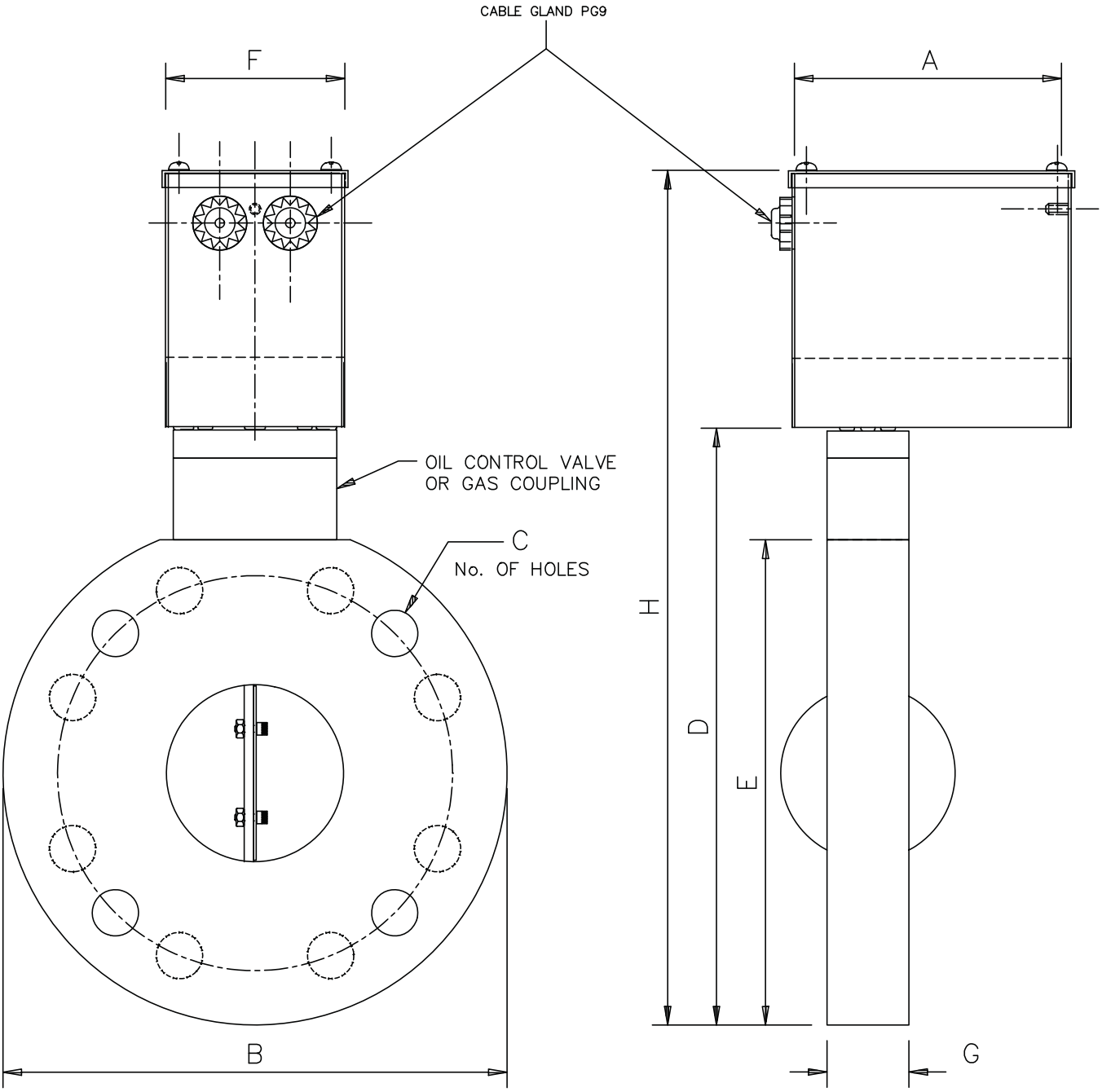

PART No.	A	B	C	D	E	F	G	H	BOLTING	VALVE SIZE
GVF45028/30	100	165	4	200	160	65	30	297	M16 X 110	50 (2")
GVF46526/30	100	185	4	218	178	65	30	315	M16 X 110	65 (2.5")
GVF48027/30	100	200	8	236	196	65	30	330	M16 X 110	80 (3")
GVF410026/30	100	220	8	254	214	65	30	350	M16 X 110	100 (4")
GVF12527/30	100	250	8	285	245	65	30	380	M16 X 110	125 (5")
GVF415028/30	100	285	8	321	281	65	30	415	M16 X 110	150 (6")

ALL MEASUREMENTS IN MILLIMETRES UNLESS STATED OTHERWISE.

MATING FLANGES, RUBBER GASKETS & BOLTS ARE NOT SUPPLIED UNLESS SPECIFIED ON ORDER.

8.2.2 Gas Valve- flanged (30mm thick imperial)- small positioning motor

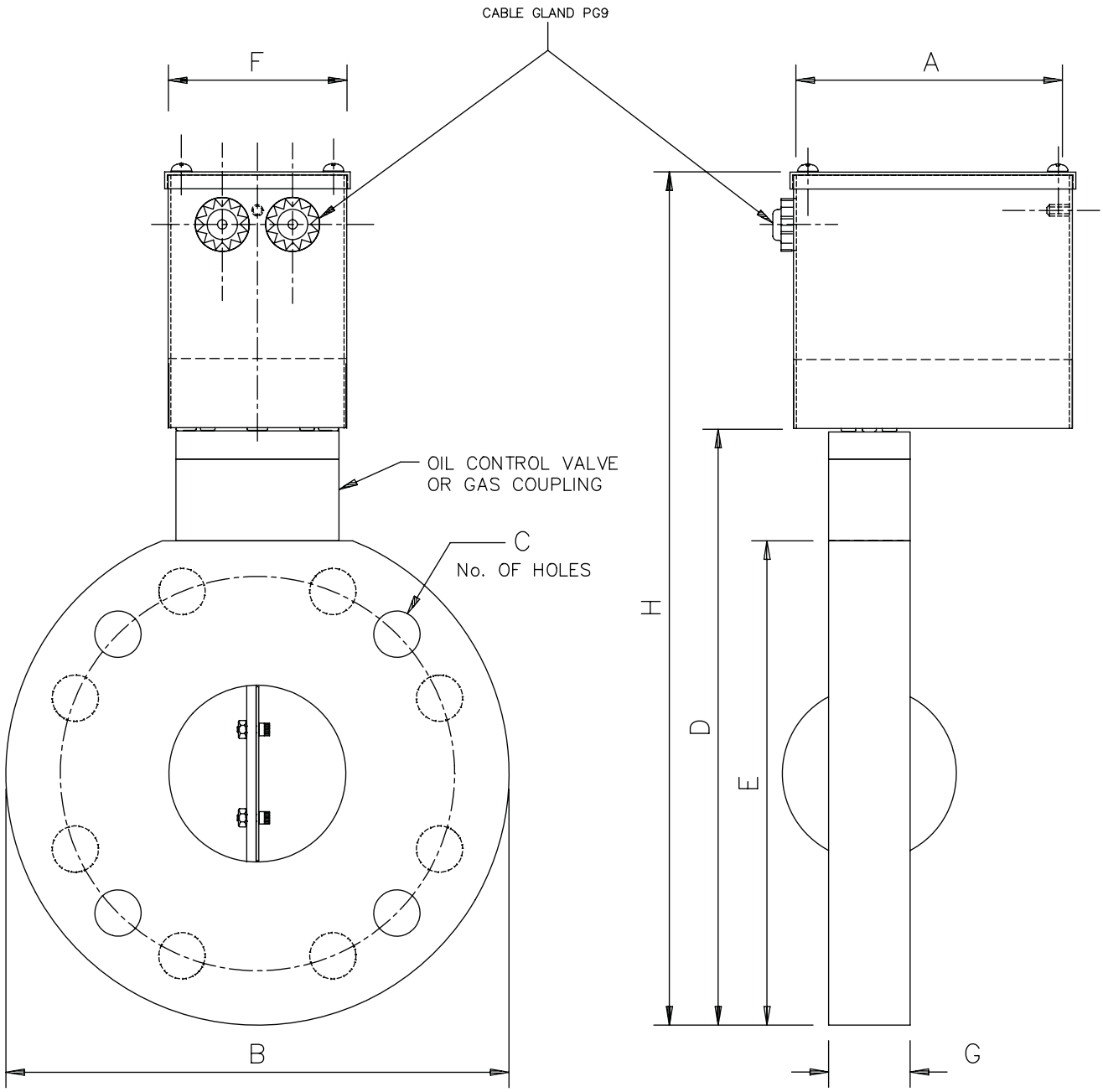

PART No.	A	B	C	D	E	F	G	H	BOLTING	VALVE SIZE
GVF45028/30	3.9"	6"	4	8"	6.25"	2.5"	1.125"	11.7"	1/2" X 4"	2"
GVF46526/30	3.9"	7"	4	8.6"	7"	2.5"	1.125"	12.40"	5/8" x 4"	2.5"
GVF48027/30	3.9"	7.5"	4	9.375"	7.75"	2.5"	1.125"	13.00"	5/8" x 4"	3"
GVF410026/30	3.9"	9"	8	10"	8.5"	2.5"	1.125"	8.75"	5/8" x 4"	4"
GVF12527/30	3.9"	10"	8	11"	9.75"	2.5"	1.125"	9.5"	3/4" x 4"	5"
GVF413028/30	3.9"	11"	8	12.5"	11"	2.5"	1.125"	10.25"	3/4" x 4"	6"

ALL MEASUREMENTS IN IMPERIAL UNLESS STATED OTHERWISE.

MATING FLANGES, RUBBER GASKETS & BOLTS ARE NOT SUPPLIED UNLESS SPECIFIED ON ORDER.

8.3.1 Gas Valve- flanged (50mm thick metric)- large positioning motor

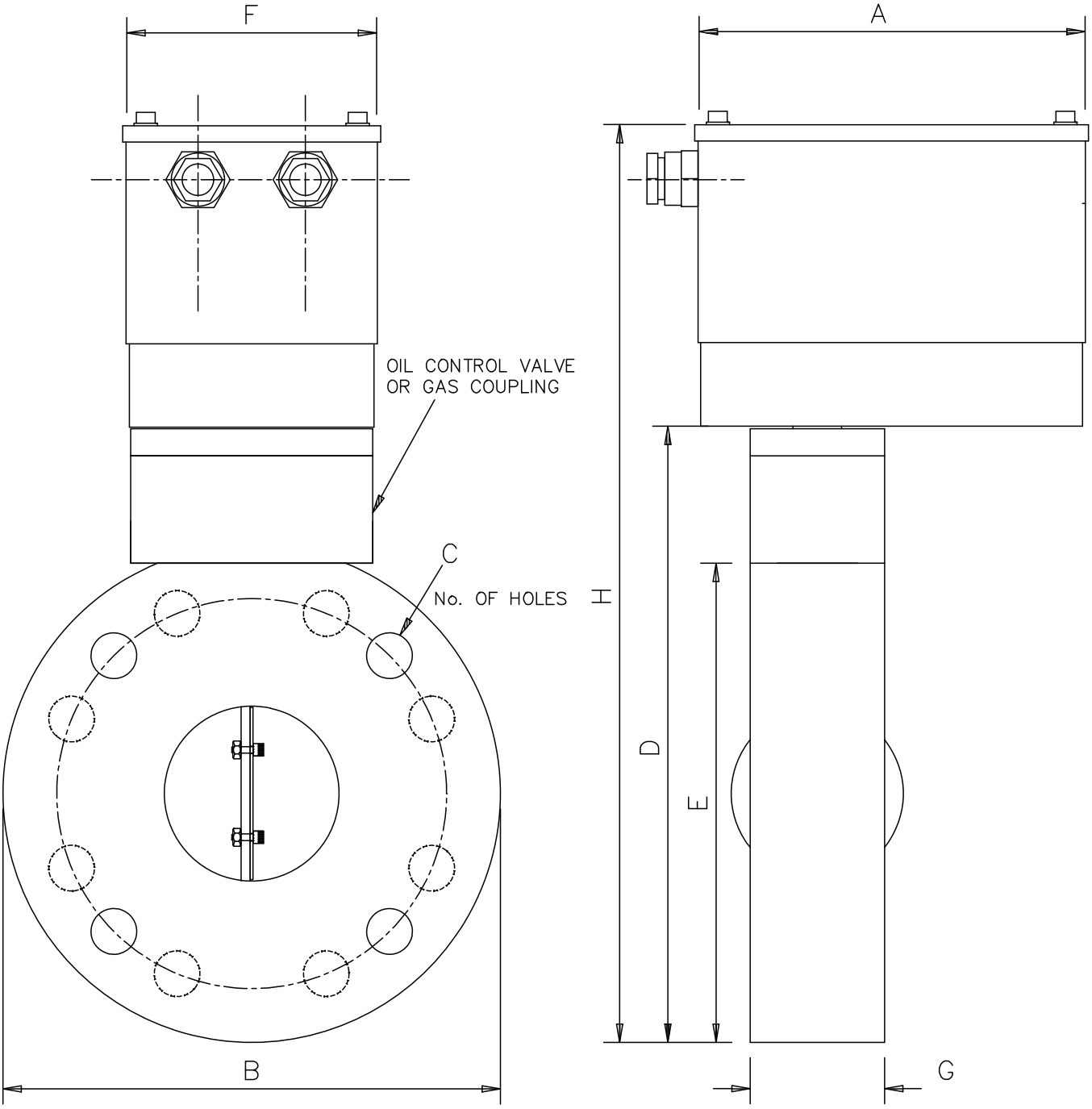

PART No.	A	B	C	D	E	F	G	H	BOLTING	VALVE SIZE
GVF45028/50	142	165	4	200	160	93	50	315	M16 X 130	50 (2")
GVF46526/50	142	185	4	218	178	93	50	343	M16 X 130	65 (2.5")
GVF48027/50	142	200	8	236	196	93	50	362	M16 X 130	80 (3")
GVF410026/50	142	220	8	254	214	93	50	380	M16 X 130	100 (4")
GVF12527/50	142	250	8	285	245	93	50	410	M16 X 130	125 (5")
GVF415028/50	142	285	8	321	281	93	50	446	M16 X 130	150 (6")

ALL MEASUREMENTS IN MILLIMETRES UNLESS STATED OTHERWISE.

MATING FLANGES, RUBBER GASKETS & BOLTS ARE NOT SUPPLIED UNLESS SPECIFIED ON ORDER.

8.3.2 Gas Valve- flanged (50mm thick imperial)- large positioning motor

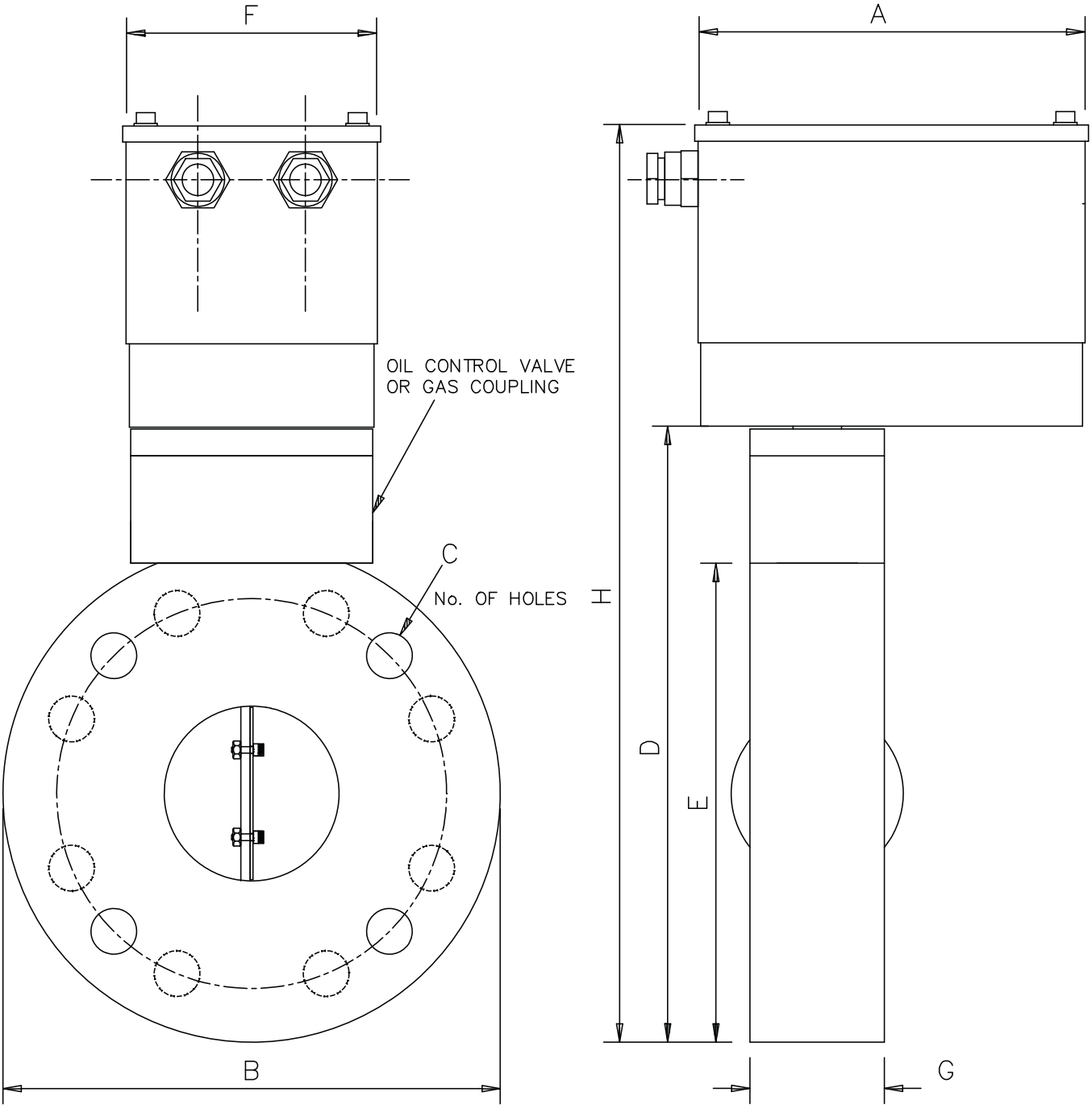

PART No.	A	B	C	D	E	F	G	H	BOLTING	VALVE SIZE
GVF45028/50	4.60"	6"	4	8"	6.25"	3.66"	2"	12.40"	1/2" X 5"	2"
GVF46526/50	4.60"	7"	4	8.6"	7"	3.66"	2"	13.50"	5/8" x 5"	2.5"
GVF48027/50	4.60"	7.5"	4	9.375"	7.75"	3.66"	2"	14.25"	5/8" x 5"	3"
GVF410026/50	4.60"	9"	8	10"	8.5"	3.66"	2"	14.92"	5/8" x 5"	4"
GVF12527/50	4.60"	10"	8	11"	9.75"	3.66"	2"	16.14"	3/4" x 5"	5"
GVF415028/50	4.60"	11"	8	12.5"	11"	3.66"	2"	17.56"	3/4" x 5"	6"

ALL MEASUREMENTS IN IMPERIAL UNLESS STATED OTHERWISE.

MATING FLANGES, RUBBER GASKETS & BOLTS ARE NOT SUPPLIED UNLESS SPECIFIED ON ORDER.

8.3.3 Piggy-back Assembly of gas and oil valve

The example shown below shows the design behind utilising one servomotor for both the gas and the oil valve. This shows a Type 2 oil valve with a 2" threaded gas valve using only one small positioning servomotor.

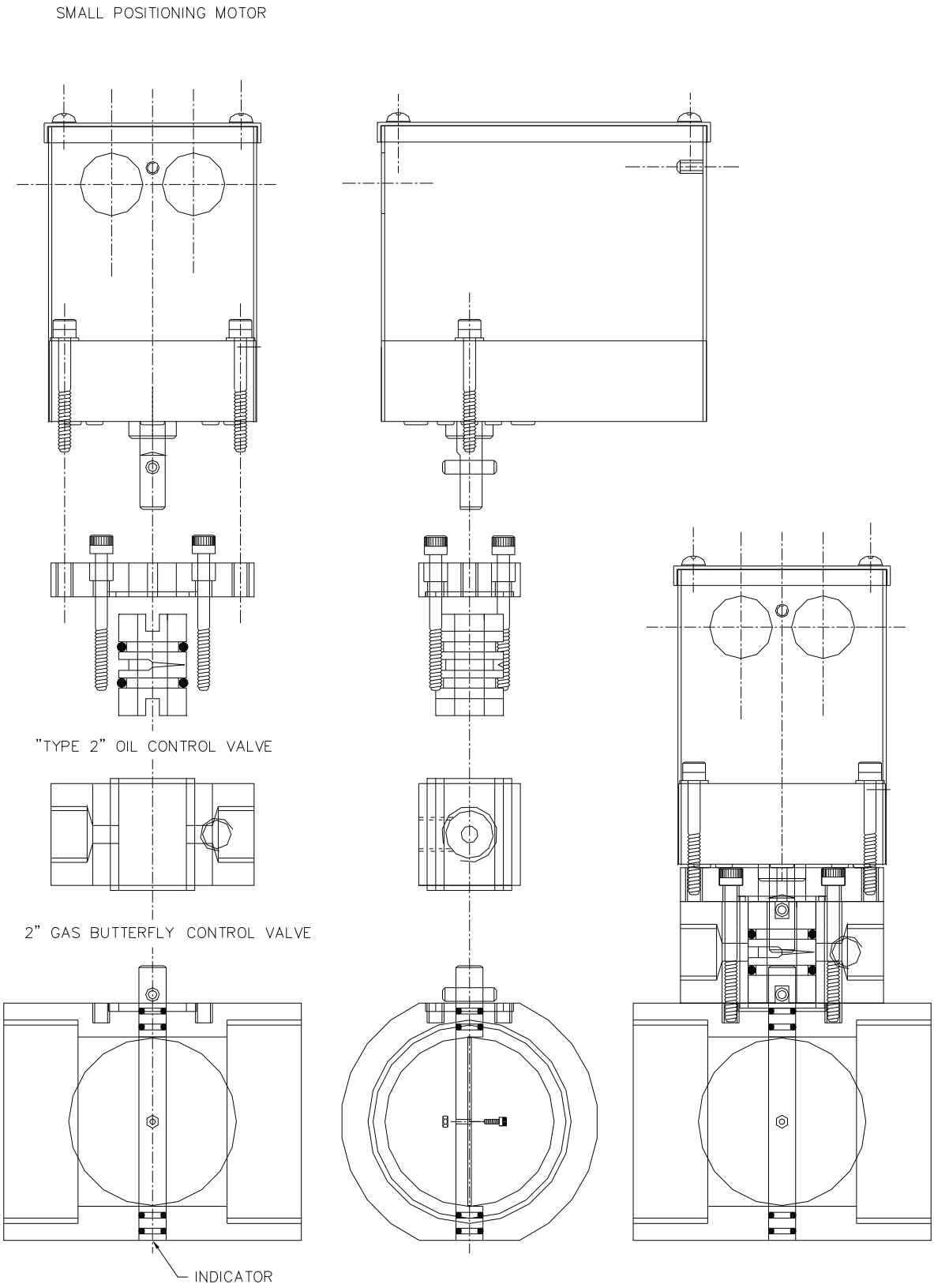

8.3.4 Piggy-back Assembly of gas and oil valve- metric

The example shown below shows the design behind utilising one servomotor for both the gas and the oil valve. This shows a Type 2 oil valve with a flanged gas valve using only one small positioning servomotor.

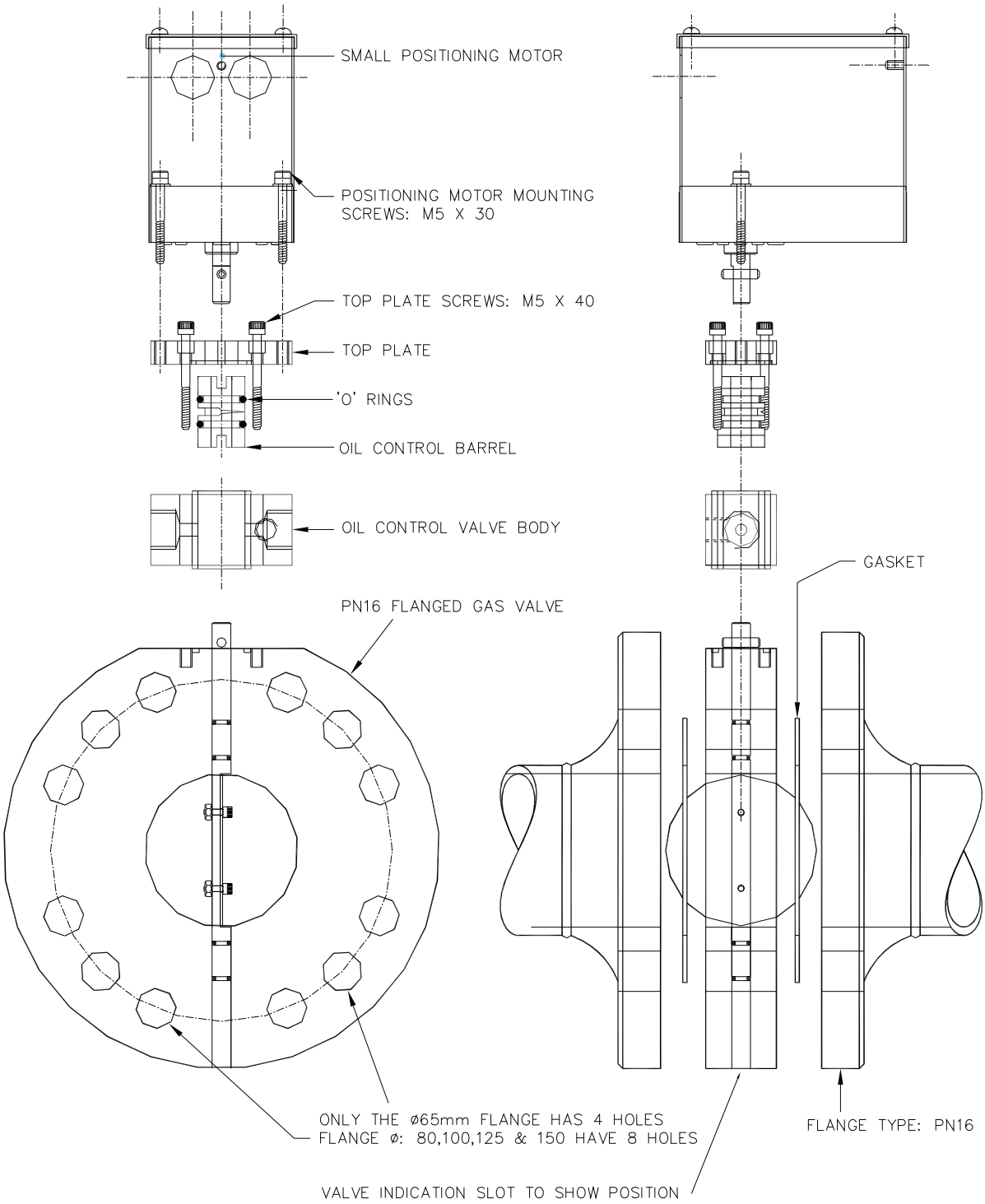

8.3.5 Piggy-back Assembly of gas and oil valve- imperial

The example shown below shows the design behind utilising one servomotor for both the gas and the oil valve. This shows a Type 2 oil valve with a flanged gas valve using only one small positioning servomotor.

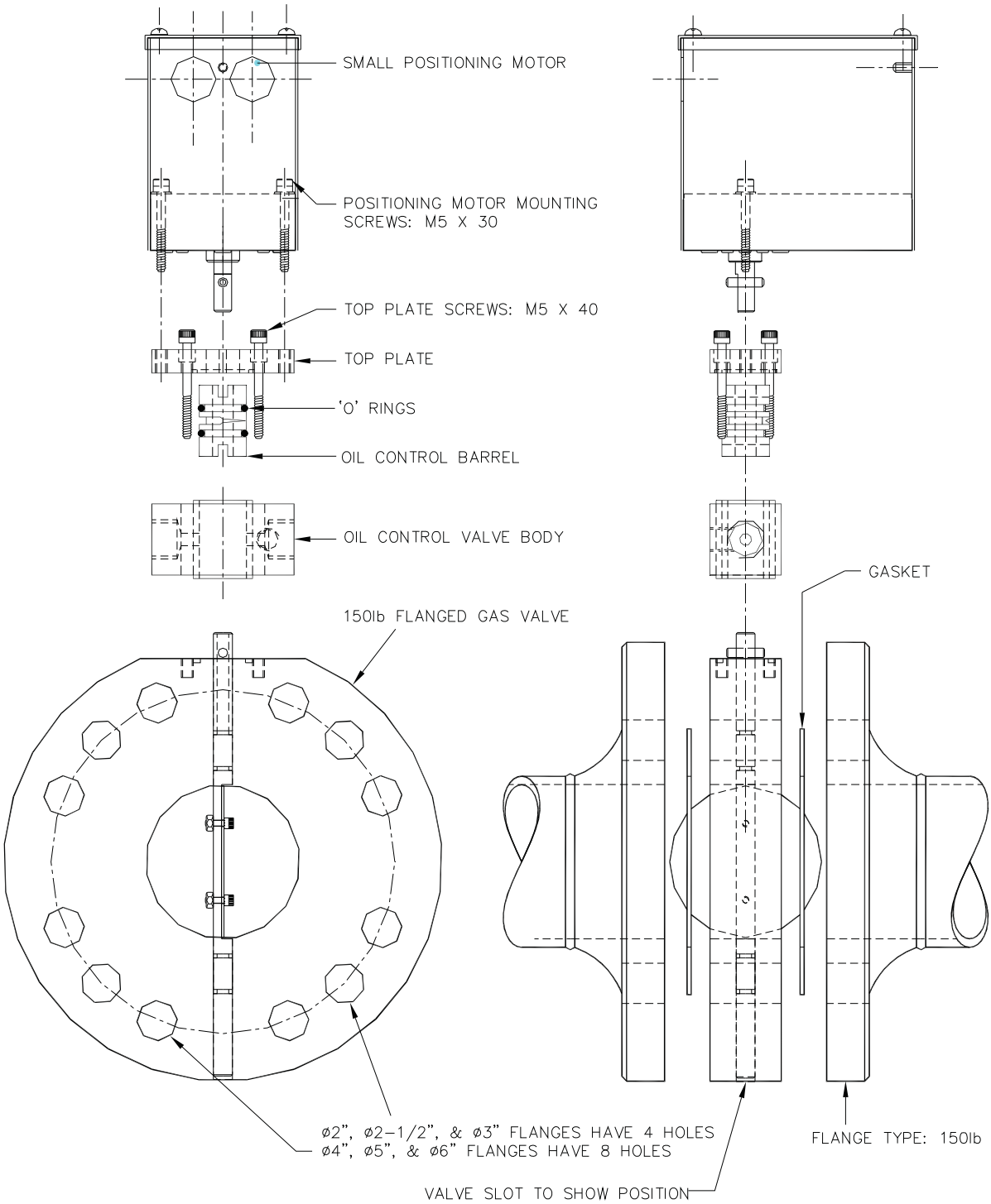

8.3.6 Autoflame Butterfly valve flow data (valve sizing)

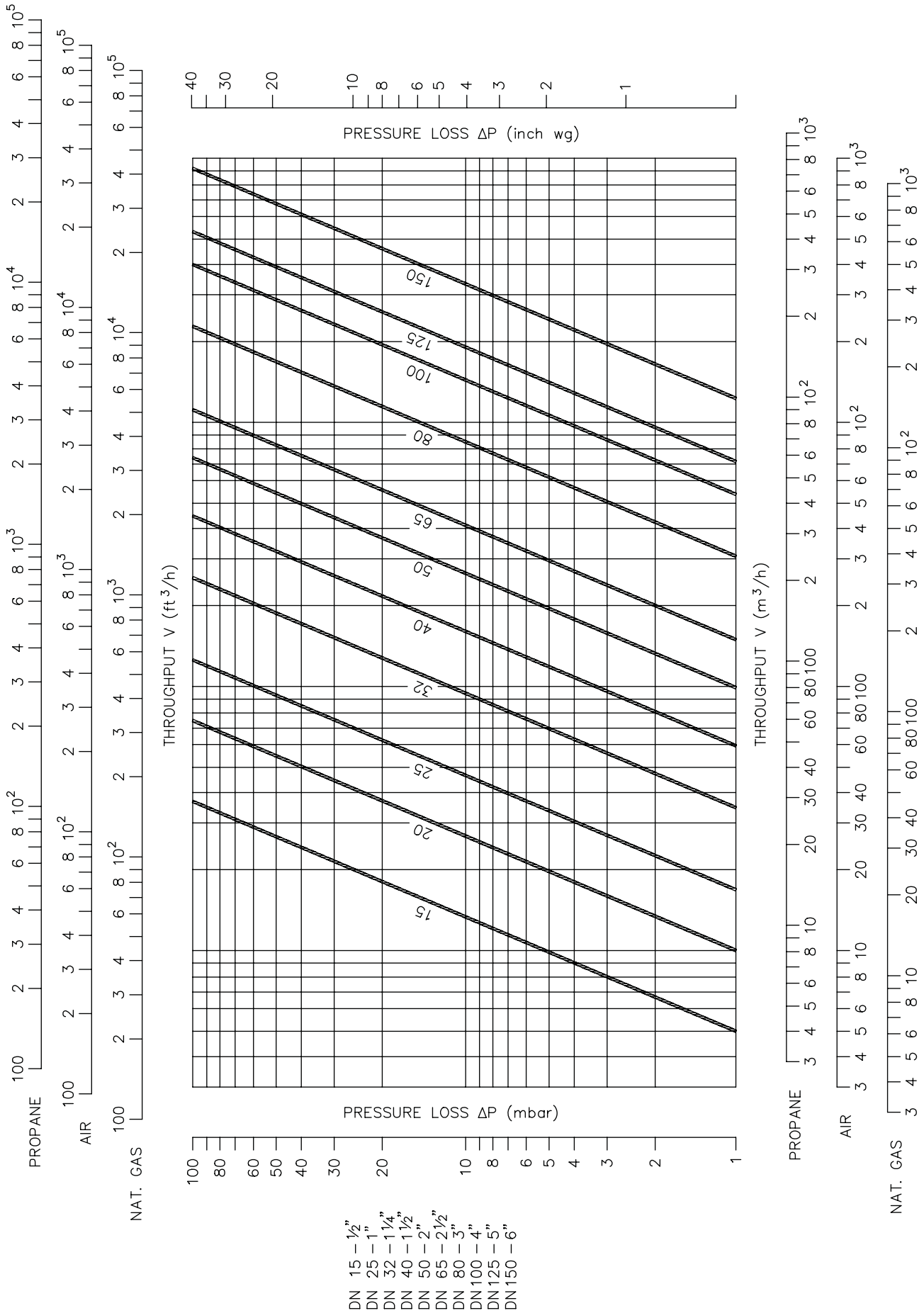

8.4 Oil Control Valves

All of the Autoflame oil valves (types 1-9) can be supplied as metering/simplex or spillback/bypass. There are eighteen different oil valves available, nine metering and nine spillback valves. Each valve has different flow charcteristics as shown in this section of the manual. It is important to ensure the correct oil valve selection for the application, otherwise the correct input and turndown available for the burner will not be met.

When using the oil control valve for a dual fuel application, i.e. gas and oil, and if the valves are to be piggy-backed, then the bottom aluminium plate of the oil valve must be removed for assembly with the gas control valve as in section 8.3.3.

8.4.1 Spillback/bypass application

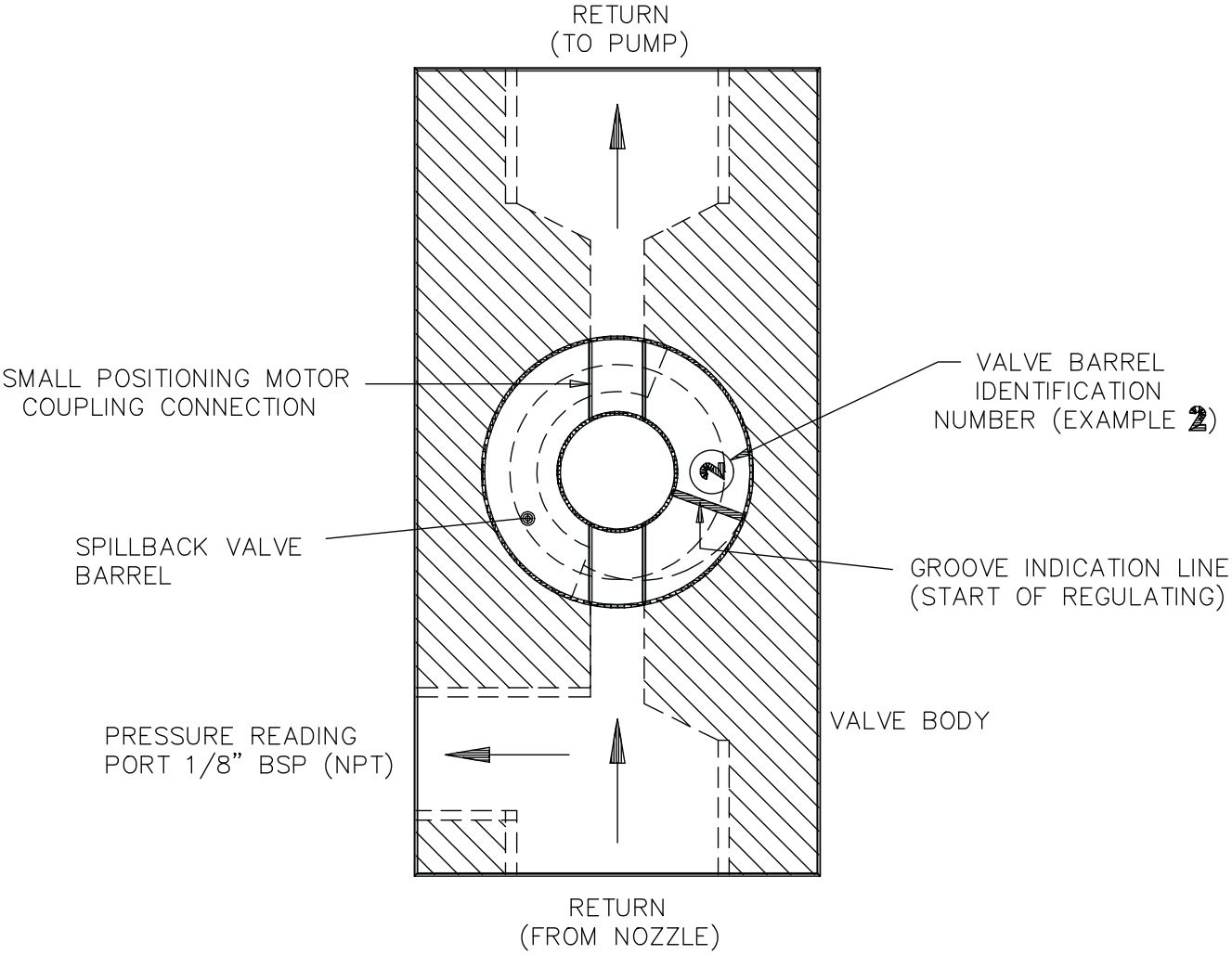

		PART No.	
VALVE TYPE	PIPE THREAD	SPILLBACK	METERING
1	1/4" BSP.	OVS31015	OVM31015
2	3/8" BSP.	OVS32016	OVM32016
5	3/8" BSP.	OVS35019	OVM35019
6	3/8" BSP.	OVS36020	OVM36020
8	3/8" BSP.	OVS38022	OVM38022
9	3/8" BSP.	OVS39023	OVM39023

8.4.2 Metering/simplex application

The metering valves are identifiable by the prefix OVM whereas the spillback valves have the prefix OVS.

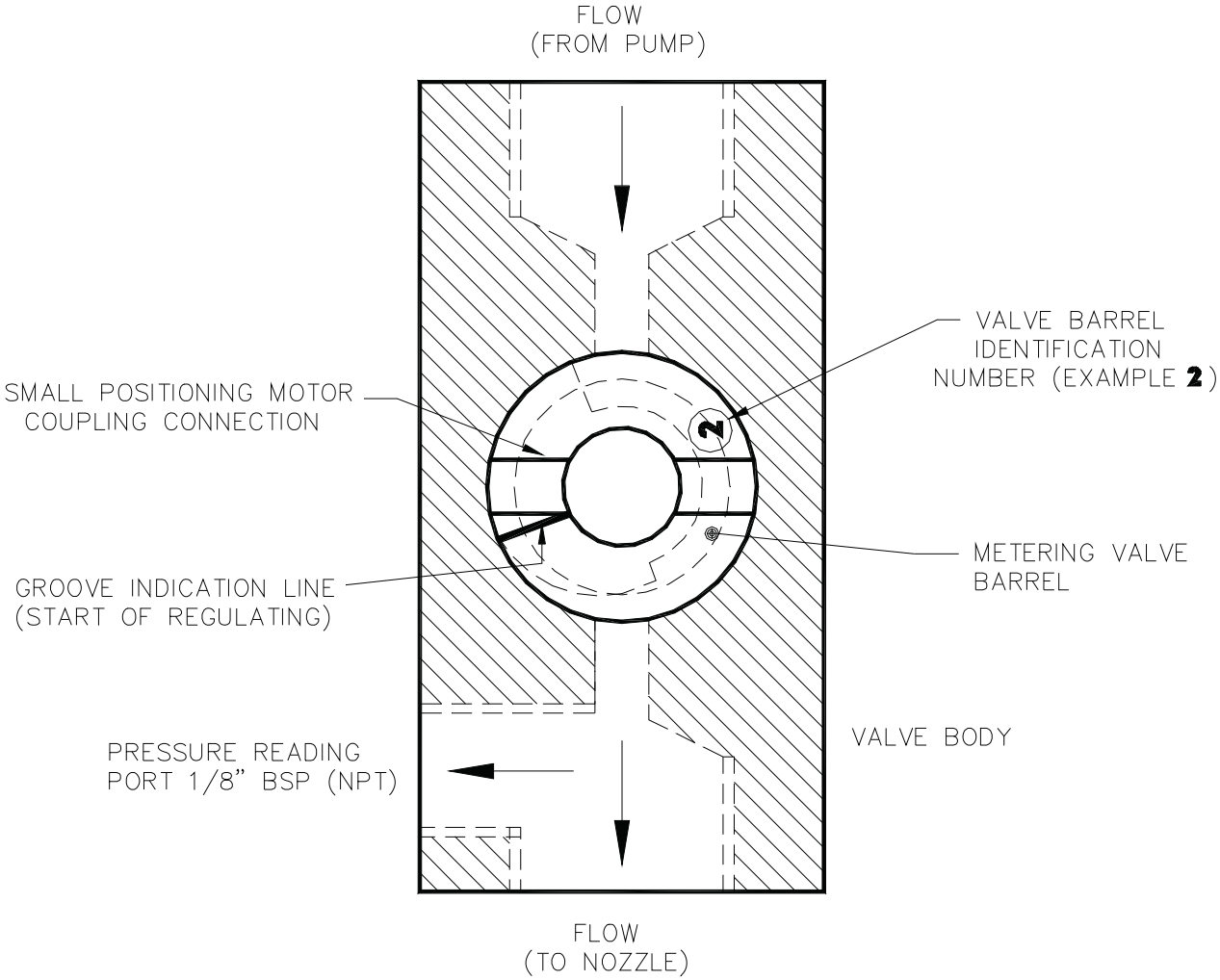

VALVE TYPE	PIPE THREAD	METERING PART NUMBER
1	1/4" BSP.	OVM31015
2	3/8" BSP.	OVM32016
5	3/8" BSP.	OVM35019
6	3/8" BSP.	OVM36020
8	3/8" BSP.	OVM38022
9	3/8" BSP.	OVM39023

For the small oil control valves, types 1/2/5/6/8/9, they have the following dimensions:

Height: 50mm (2") including bottom plate
Width: 30mm (1.125")
Length: 60mm (2.375")

The small oil control valves use a small servomotor for positioning control.

8.5 Large oil valve

For the large oil control valves, types 3/4/7, they have the following dimensions:

Height: 70mm (3") including bottom plate
Width: 50mm (2")
Length: 110mm (4.375")

The large oil control valves use a large servomotor for positioning control.

8.5.1 Spillback/bypass application

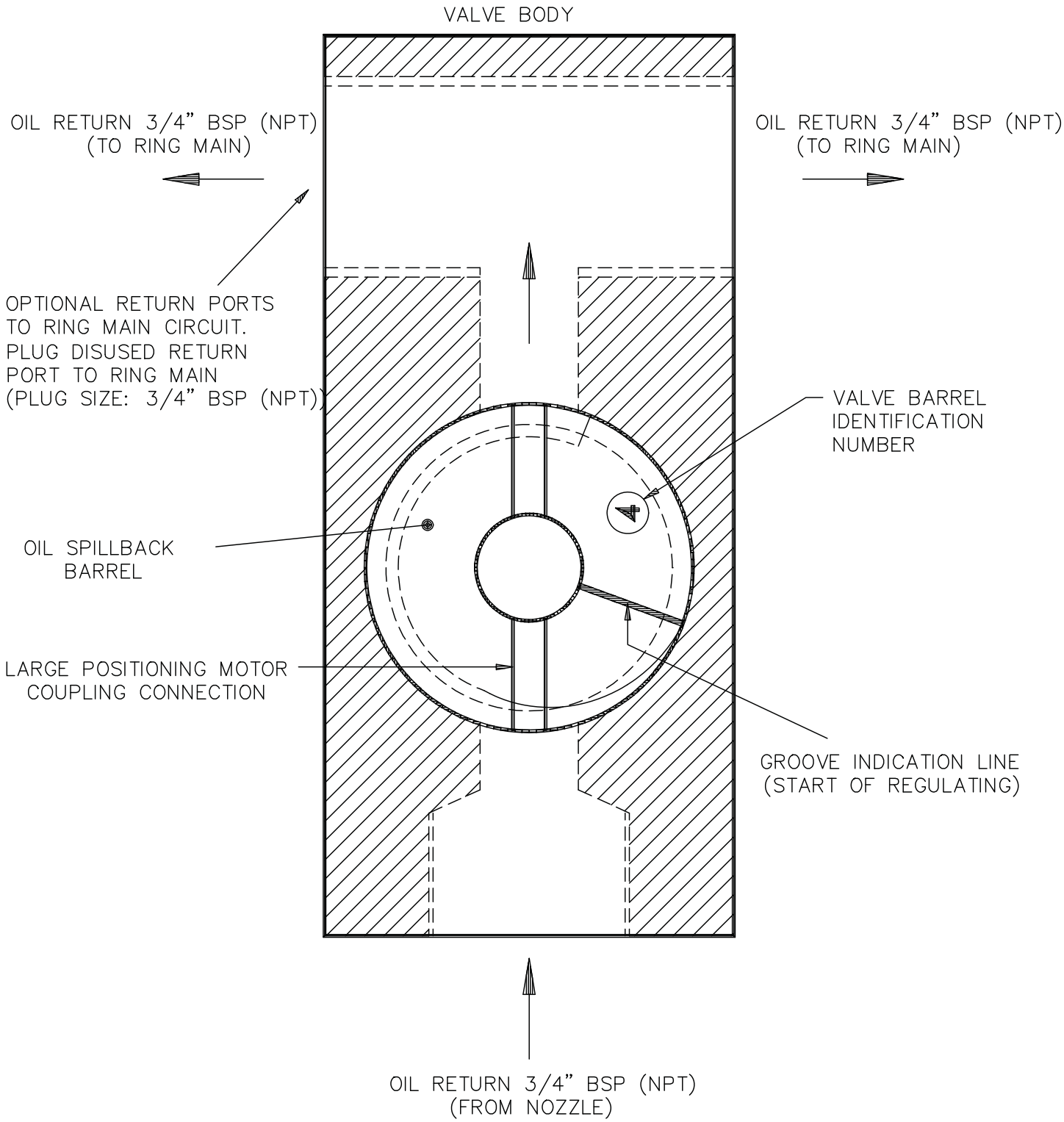

8.5.2 Metering/simplex application

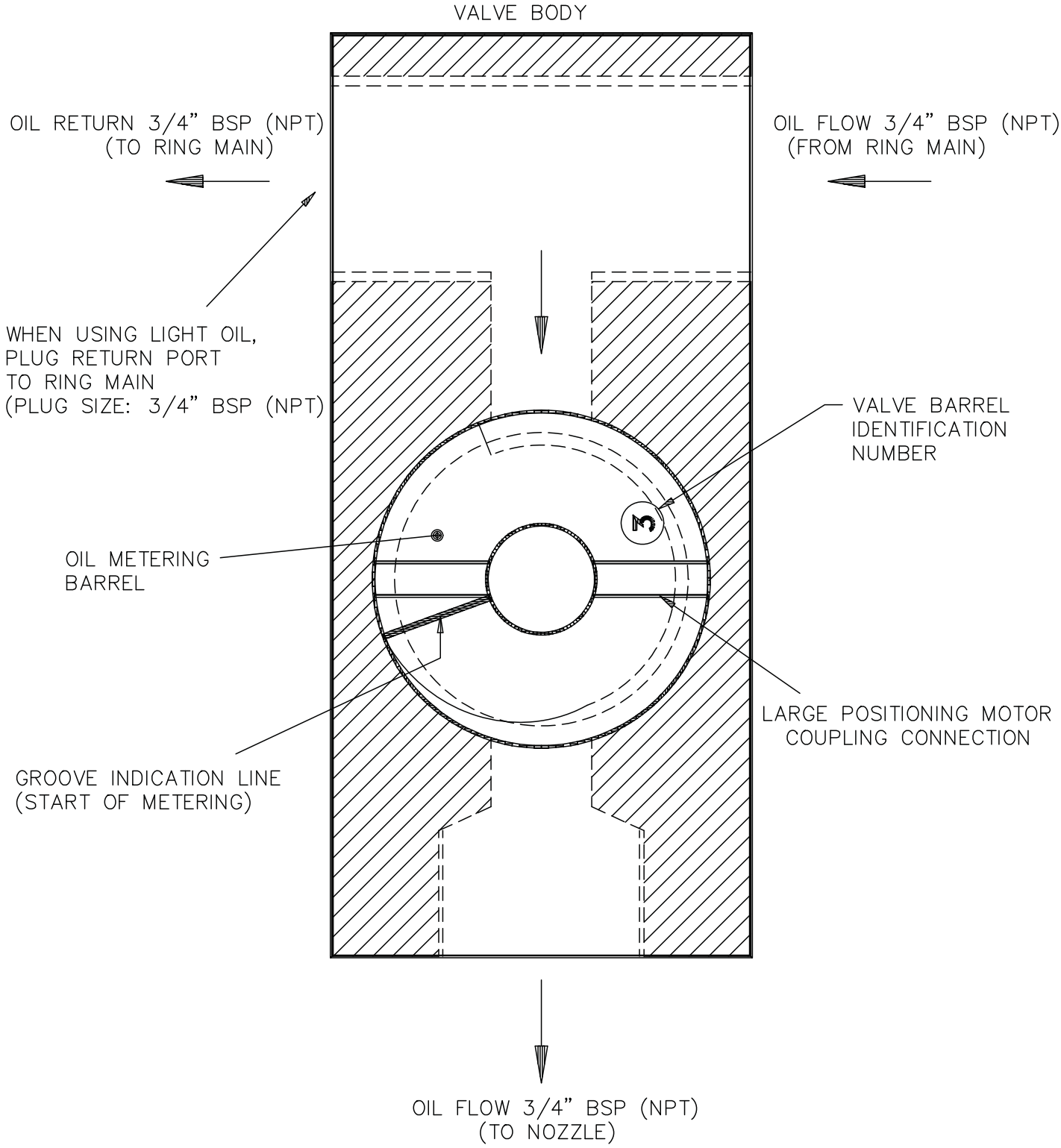

8.6 Oil Valve flow characteristics

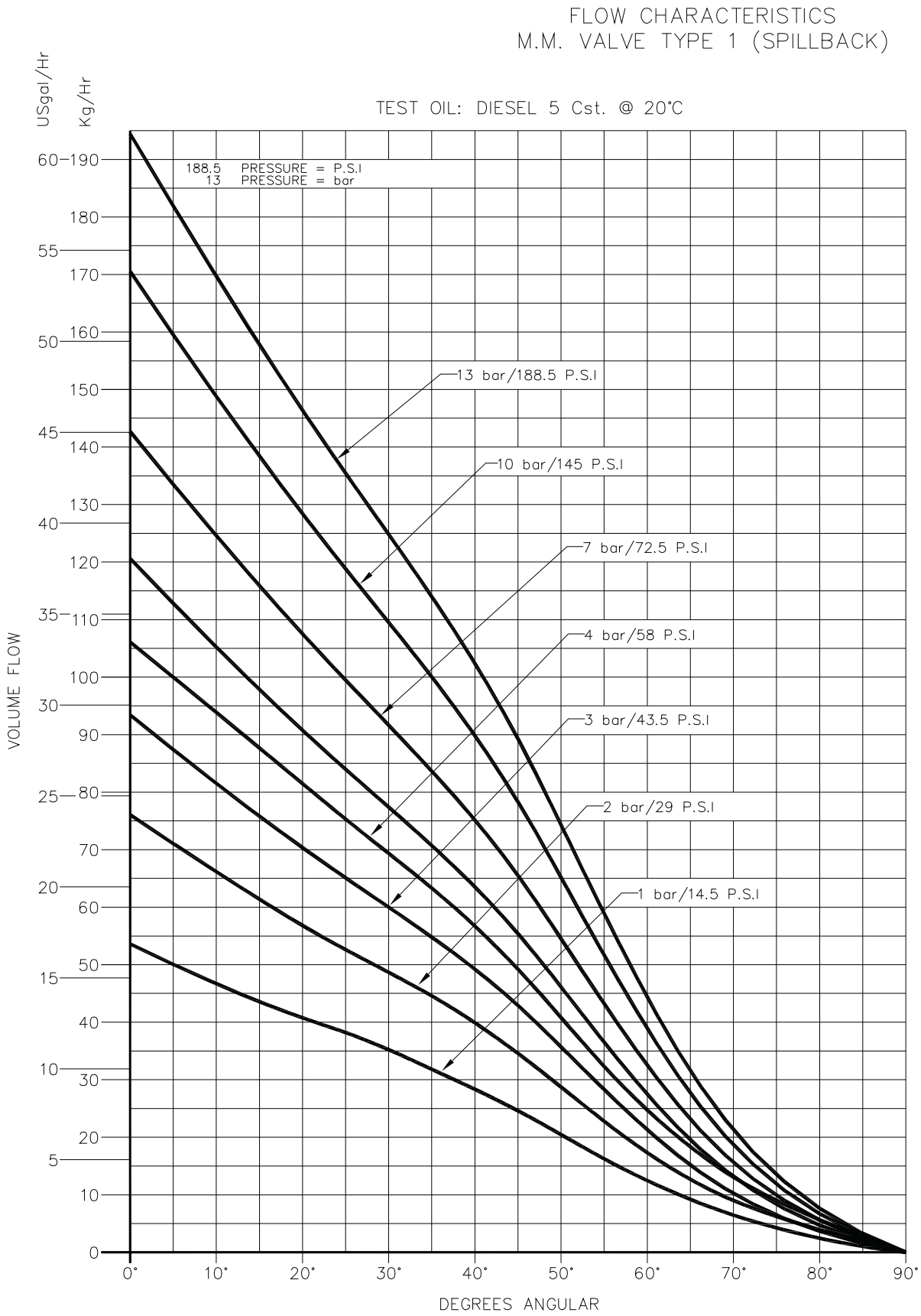

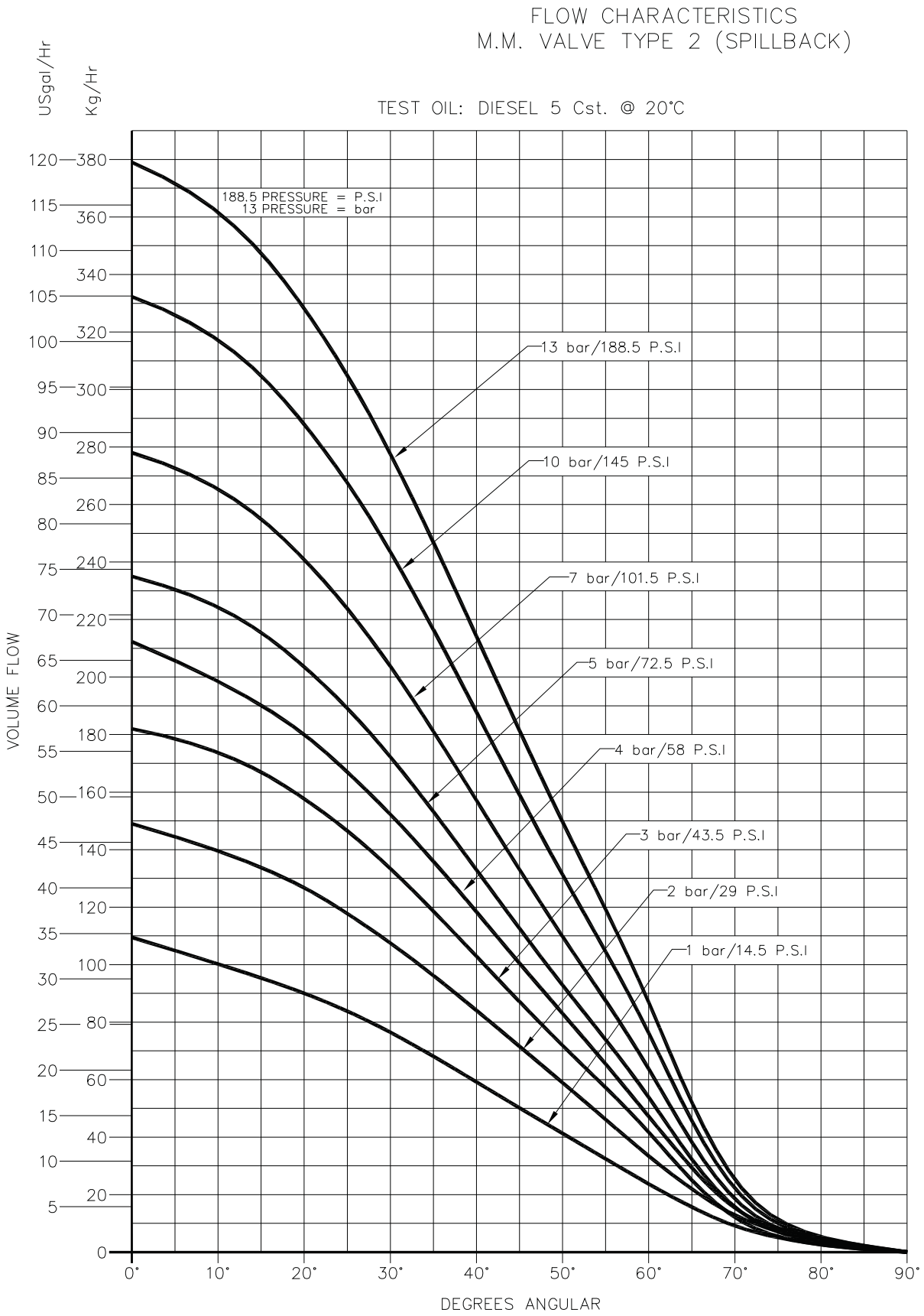
FLOW CHARACTERISTICS
M.M. VALVE TYPE 2 (SPILLBACK)
TEST OIL: DIESEL 5 Cst. @ 20°C
USgal/Hr
Kg/Hr
VOLUME FLOW
DEGREES ANGULAR
188.5 PRESSURE = P.S.I
13 PRESSURE = bar
13 bar/188.5 P.S.I
10 bar/145 P.S.I
7 bar/101.5 P.S.I
5 bar/72.5 P.S.I
4 bar/58 P.S.I
3 bar/43.5 P.S.I
2 bar/29 P.S.I
1 bar/14.5 P.S.I
0°
10°
20°
30°
40°
50°
60°
70°
80°
90°

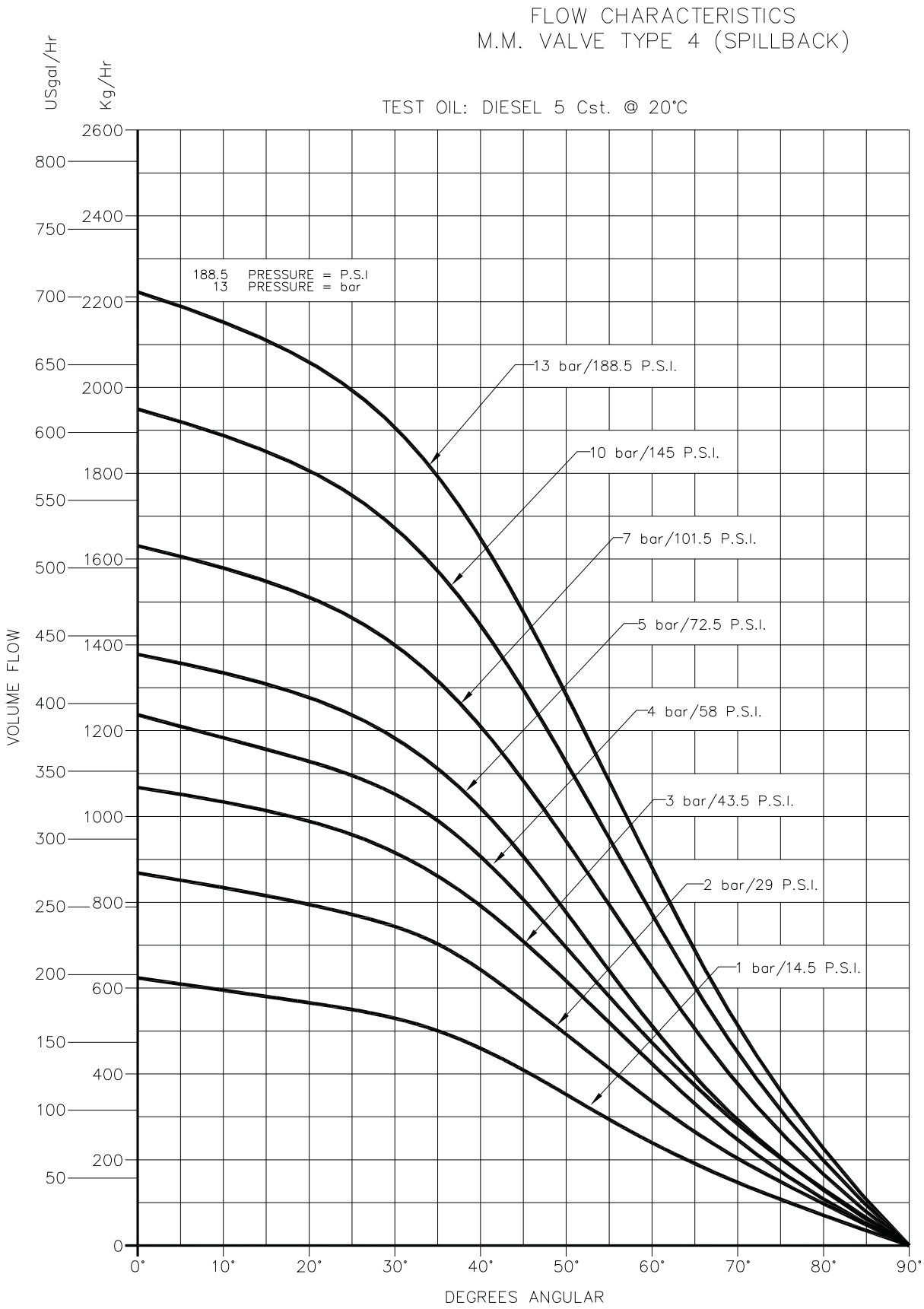
FLOW CHARACTERISTICS
M.M. VALVE TYPE 4 (SPILLBACK)
TEST OIL: DIESEL 5 Cst. @ 20°C
USgal/Hr
Kg/Hr
188.5 PRESSURE = P.S.I
13 PRESSURE = bar
13 bar/188.5 P.S.I.
10 bar/145 P.S.I.
7 bar/101.5 P.S.I.
5 bar/72.5 P.S.I.
4 bar/58 P.S.I.
3 bar/43.5 P.S.I.
2 bar/29 P.S.I.
1 bar/14.5 P.S.I.
VOLUME FLOW
DEGREES ANGULAR
0°
10°
20°
30°
40°
50°
60°
70°
80°
90°

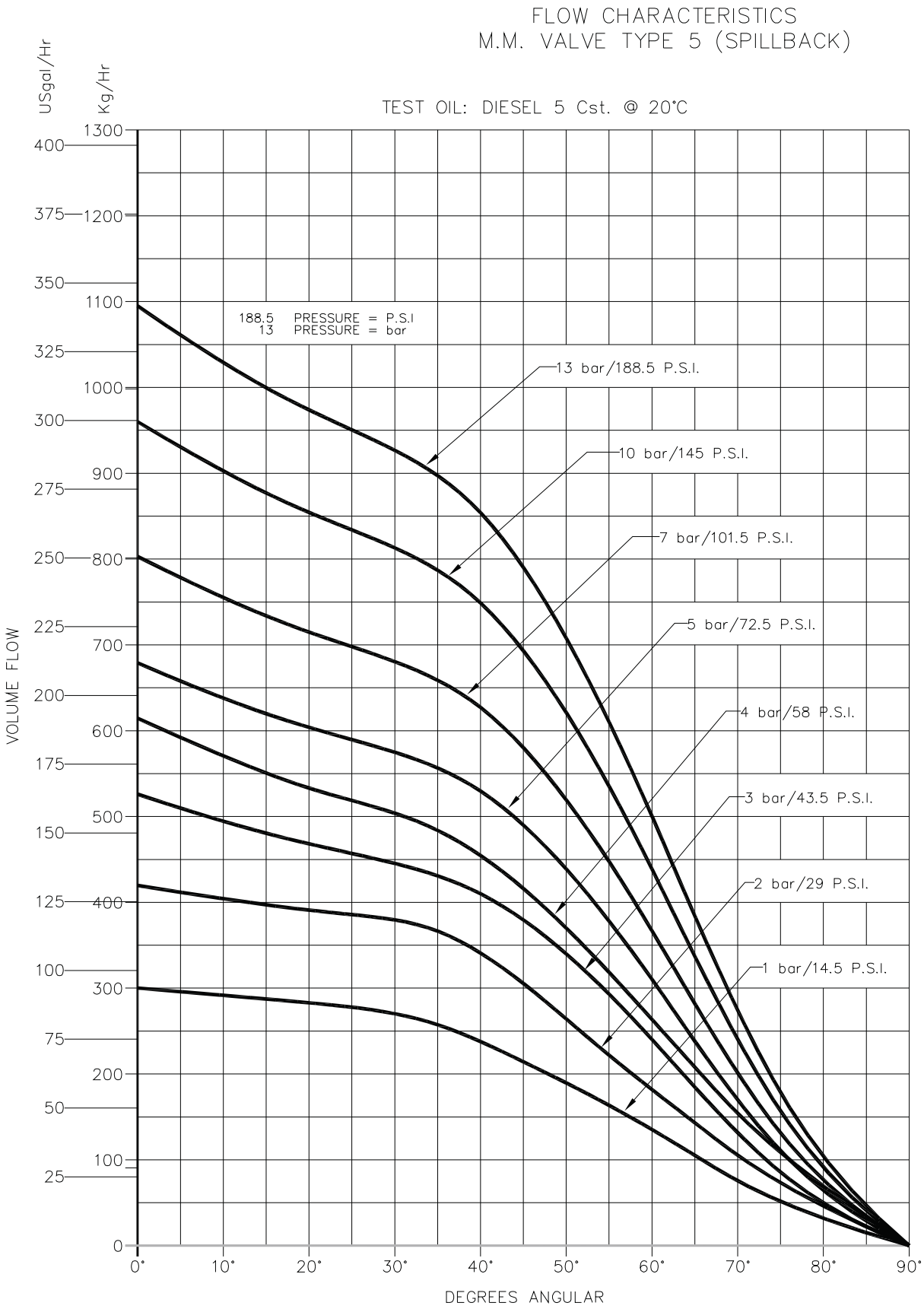
FLOW CHARACTERISTICS
M.M. VALVE TYPE 5 (SPILLBACK)
TEST OIL: DIESEL 5 Cst. @ 20°C
USgal/Hr
Kg/Hr
VOLUME FLOW
188.5 PRESSURE = P.S.I
13 PRESSURE = bar
13 bar/188.5 P.S.I.
10 bar/145 P.S.I.
7 bar/101.5 P.S.I.
5 bar/72.5 P.S.I.
4 bar/58 P.S.I.
3 bar/43.5 P.S.I.
2 bar/29 P.S.I.
1 bar/14.5 P.S.I.
DEGREES ANGULAR

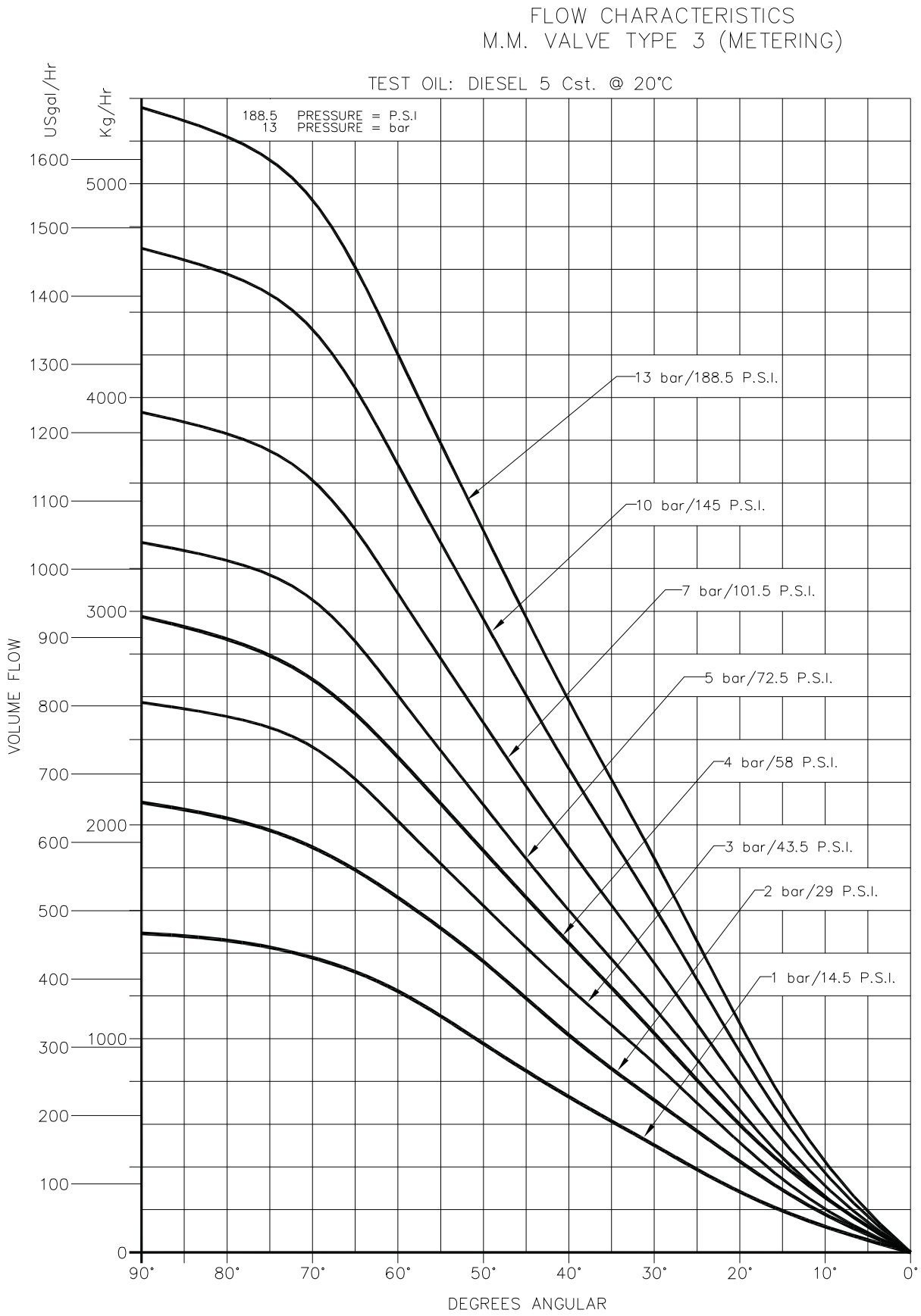
FLOW CHARACTERISTICS
M.M. VALVE TYPE 3 (METERING)
TEST OIL: DIESEL 5 Cst. @ 20°C
188.5 PRESSURE = P.S.I
13 PRESSURE = bar
USgal/Hr
Kg/Hr
VOLUME FLOW
1600
1500
1400
1300
1200
1100
1000
900
800
700
600
500
400
300
200
100
0
5000
4000
3000
2000
1000
13 bar/188.5 P.S.I.
10 bar/145 P.S.I.
7 bar/101.5 P.S.I.
5 bar/72.5 P.S.I.
4 bar/58 P.S.I.
3 bar/43.5 P.S.I.
2 bar/29 P.S.I.
1 bar/14.5 P.S.I.
90°
80°
70°
60°
50°
40°
30°
20°
10°
0°
DEGREES ANGULAR

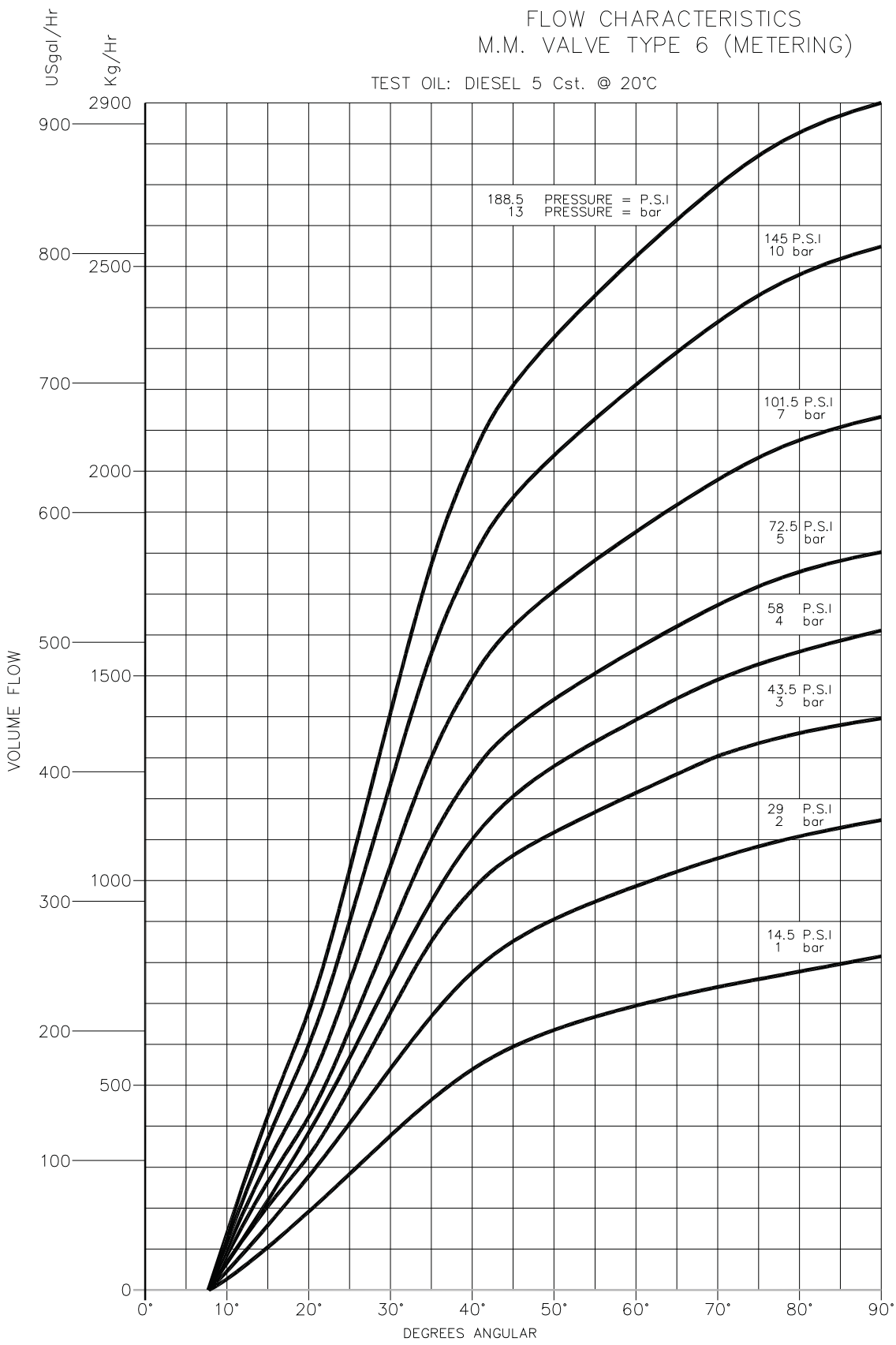
FLOW CHARACTERISTICS
M.M. VALVE TYPE 6 (METERING)
TEST OIL: DIESEL 5 Cst. @ 20°C
USgal/Hr
Kg/Hr
VOLUME FLOW
DEGREES ANGULAR
188.5 PRESSURE = P.S.I
13 PRESSURE = bar
145 P.S.I
10 bar
101.5 P.S.I
7 bar
72.5 P.S.I
5 bar
58 P.S.I
4 bar
43.5 P.S.I
3 bar
29 P.S.I
2 bar
14.5 P.S.I
1 bar
900
800
700
600
500
400
300
200
100
0
2900
2500
2000
1500
1000
500
0°
10°
20°
30°
40°
50°
60°
70°
80°
90°

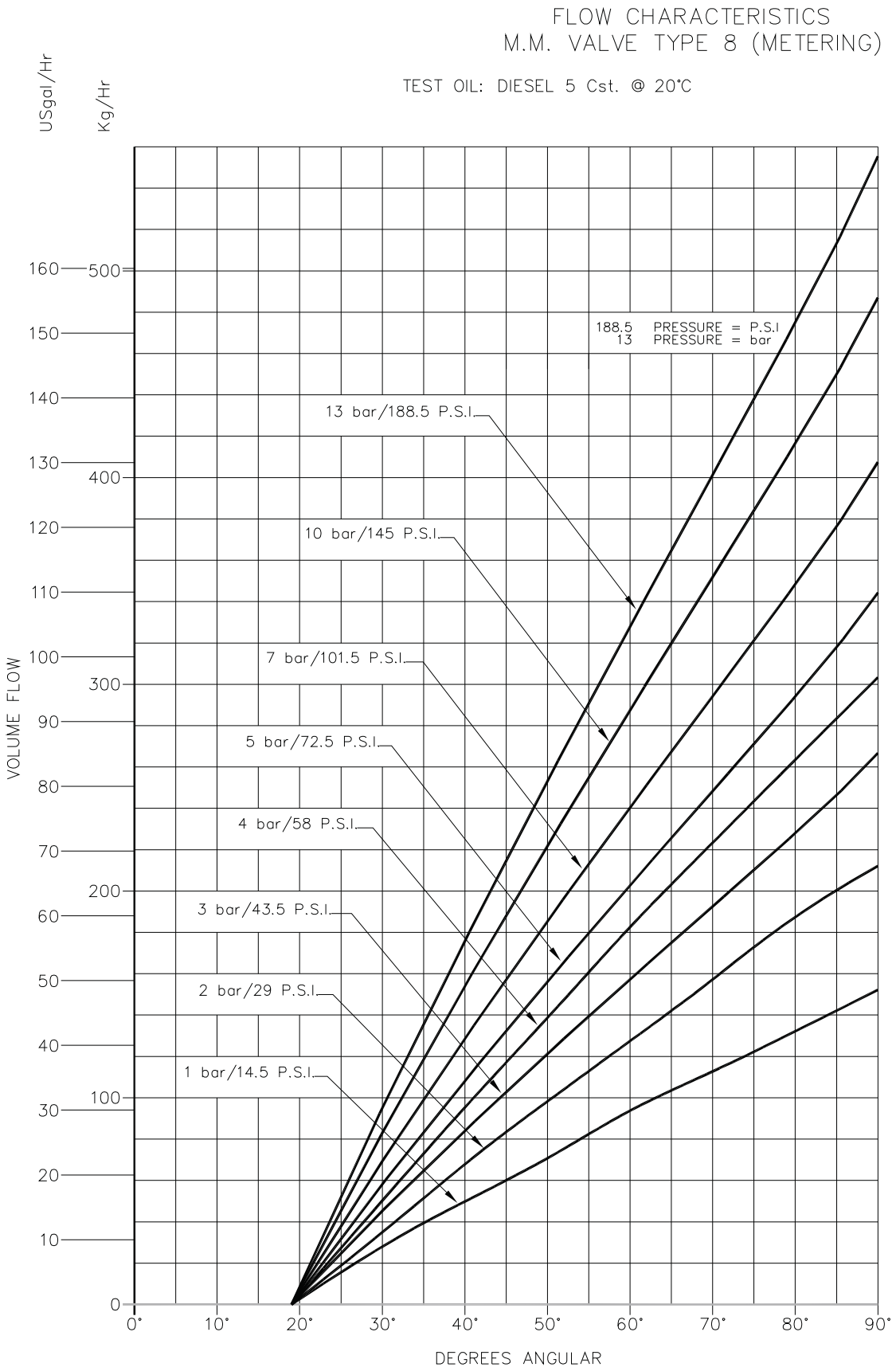
FLOW CHARACTERISTICS
M.M. VALVE TYPE 8 (METERING)
TEST OIL: DIESEL 5 Cst. @ 20°C
USgal/Hr
Kg/Hr
VOLUME FLOW
188.5 PRESSURE = P.S.I
13 PRESSURE = bar
13 bar/188.5 P.S.I.
10 bar/145 P.S.I.
7 bar/101.5 P.S.I.
5 bar/72.5 P.S.I.
4 bar/58 P.S.I.
3 bar/43.5 P.S.I.
2 bar/29 P.S.I.
1 bar/14.5 P.S.I.
160
150
140
130
120
110
100
90
80
70
60
50
40
30
20
10
0
500
400
300
200
100
0°
10°
20°
30°
40°
50°
60°
70°
80°
90°
DEGREES ANGULAR

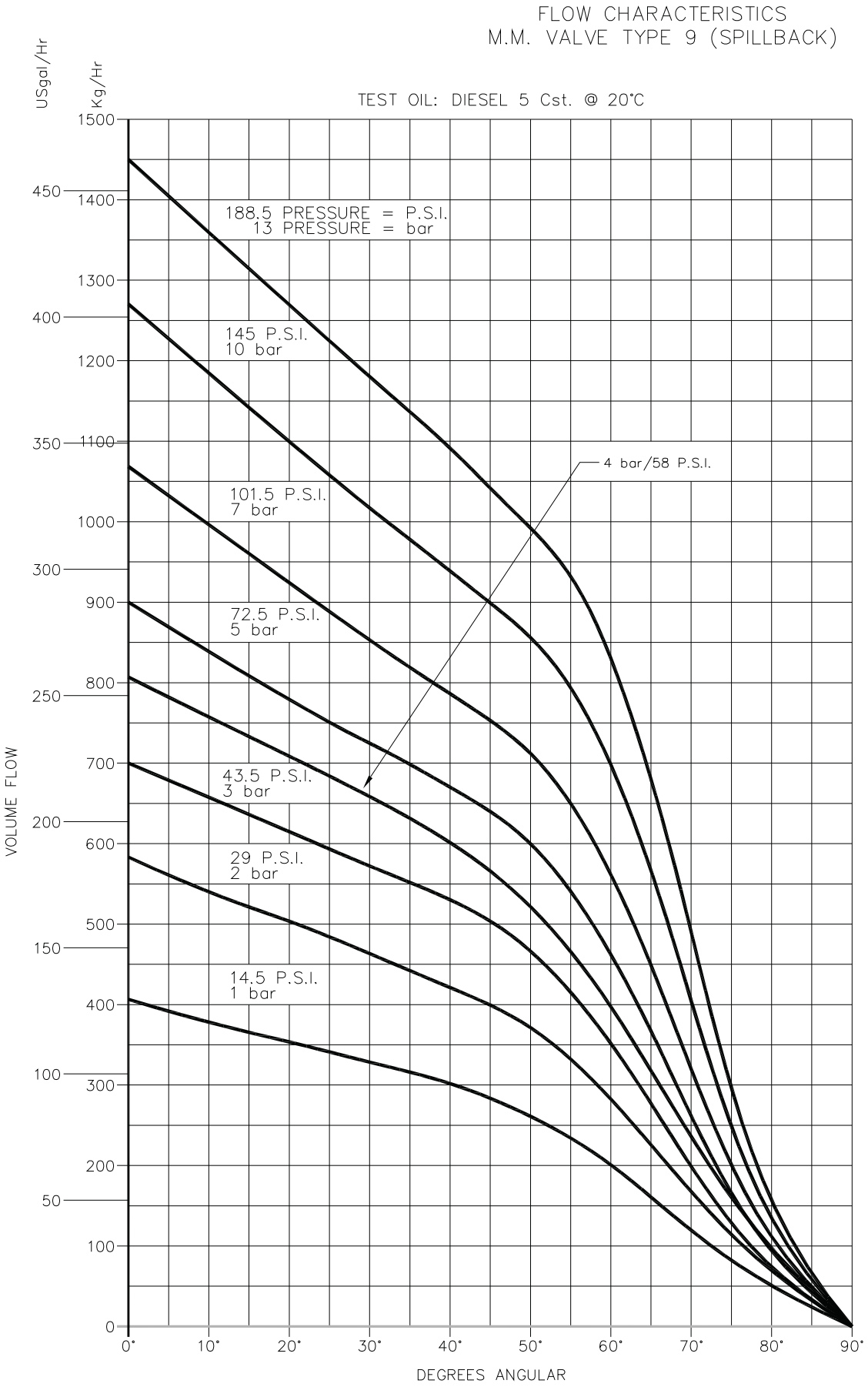
FLOW CHARACTERISTICS
M.M. VALVE TYPE 9 (SPILLBACK)
TEST OIL: DIESEL 5 Cst. @ 20°C
USgal/Hr
Kg/Hr
VOLUME FLOW
DEGREES ANGULAR
188.5 PRESSURE = P.S.I.
13 PRESSURE = bar
145 P.S.I.
10 bar
101.5 P.S.I.
7 bar
72.5 P.S.I.
5 bar
43.5 P.S.I.
3 bar
29 P.S.I.
2 bar
14.5 P.S.I.
1 bar
4 bar/58 P.S.I.
0
50
100
150
200
250
300
350
400
450
0
100
200
300
400
500
600
700
800
900
1000
1100
1200
1300
1400
1500
0°
10°
20°
30°
40°
50°
60°
70°
80°
90°

8.7 Small Positioning Servomotor- part number MM10005

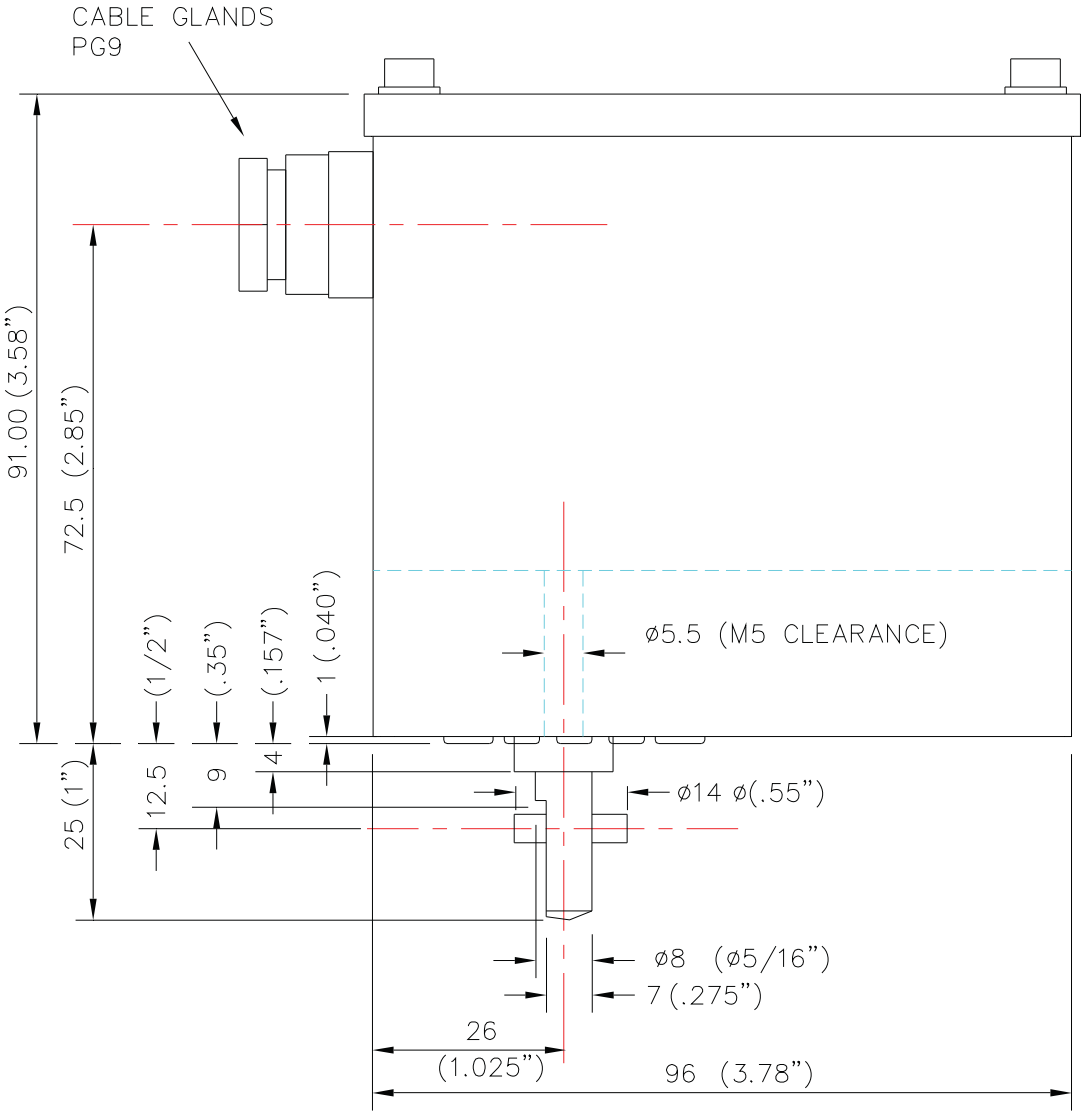

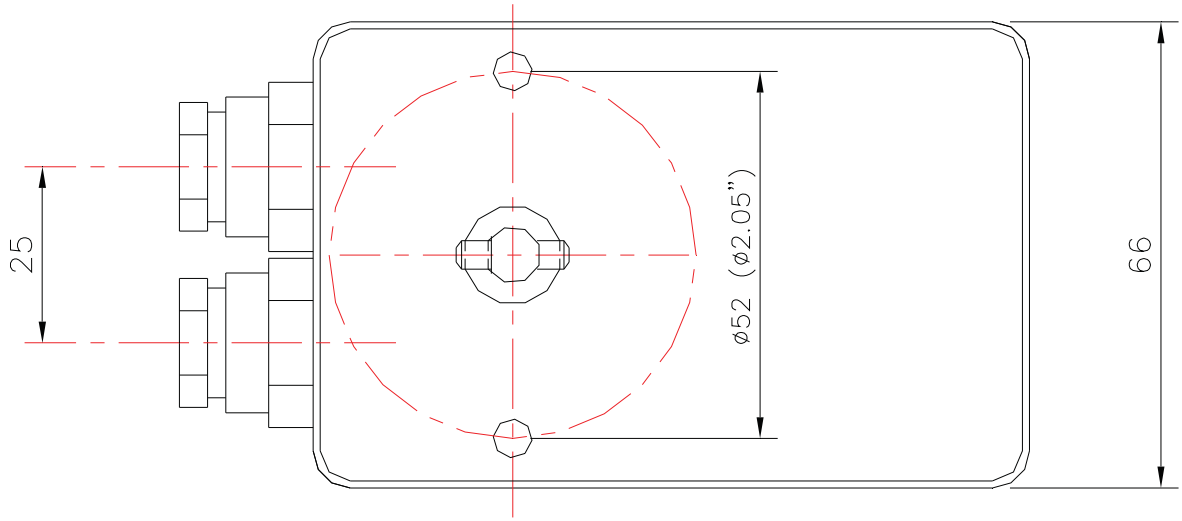

Note:

The Autoflame product must only be installed, set-up, commissioned and adjusted by an Autoflame certified technical engineer.

To adjust the potentiometer loosen the tamper proof screws using a tamper proof screwdriver as supplied by Autoflame Engineering. After adjustment, ensure tightness but do not overtighten. Use fingers only to adjust the position of the potentiometer. Do not raise the potentiometer from the PCB.

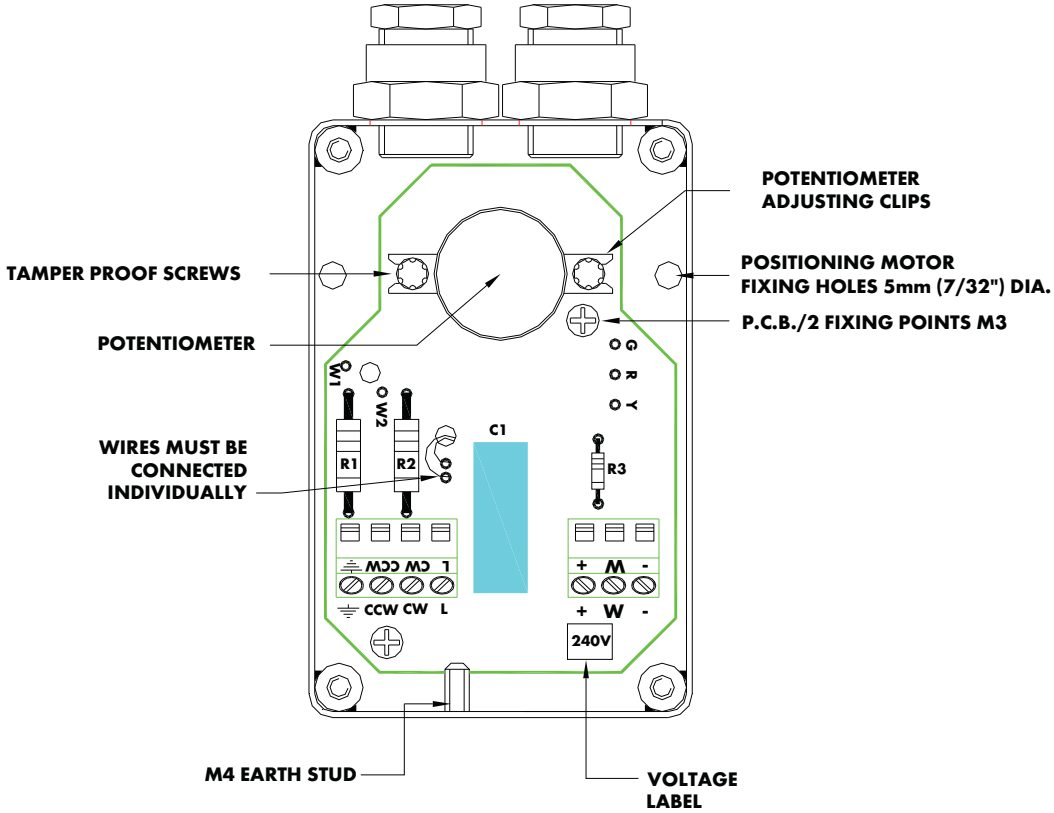

Specification	
Supply Voltage	24/230V, 50/60Hz
Output Shaft Torque	1.2Nm / 0.89 ft lbs
Operating Angle	0-90°
Operating Time	Nominal 20 seconds
Max Rated Power	3W
Ambient Temperature	0°C to 60°C / 32°F to 140°F
Industrial Protection Rating	IP54 / NEMA 13
Mounting Angle	360°
Positioning	MM Drive
Drive Motor	Synchronous
Body Material	Mild Steel CR4
Coating	Interpon 700 Powder Coat
Weight	0.55kg
Dimensions	99x92x64mm
Wiring Connection	PG11 Gland

8.8 Large Positioning Servomotor- part number MM10004

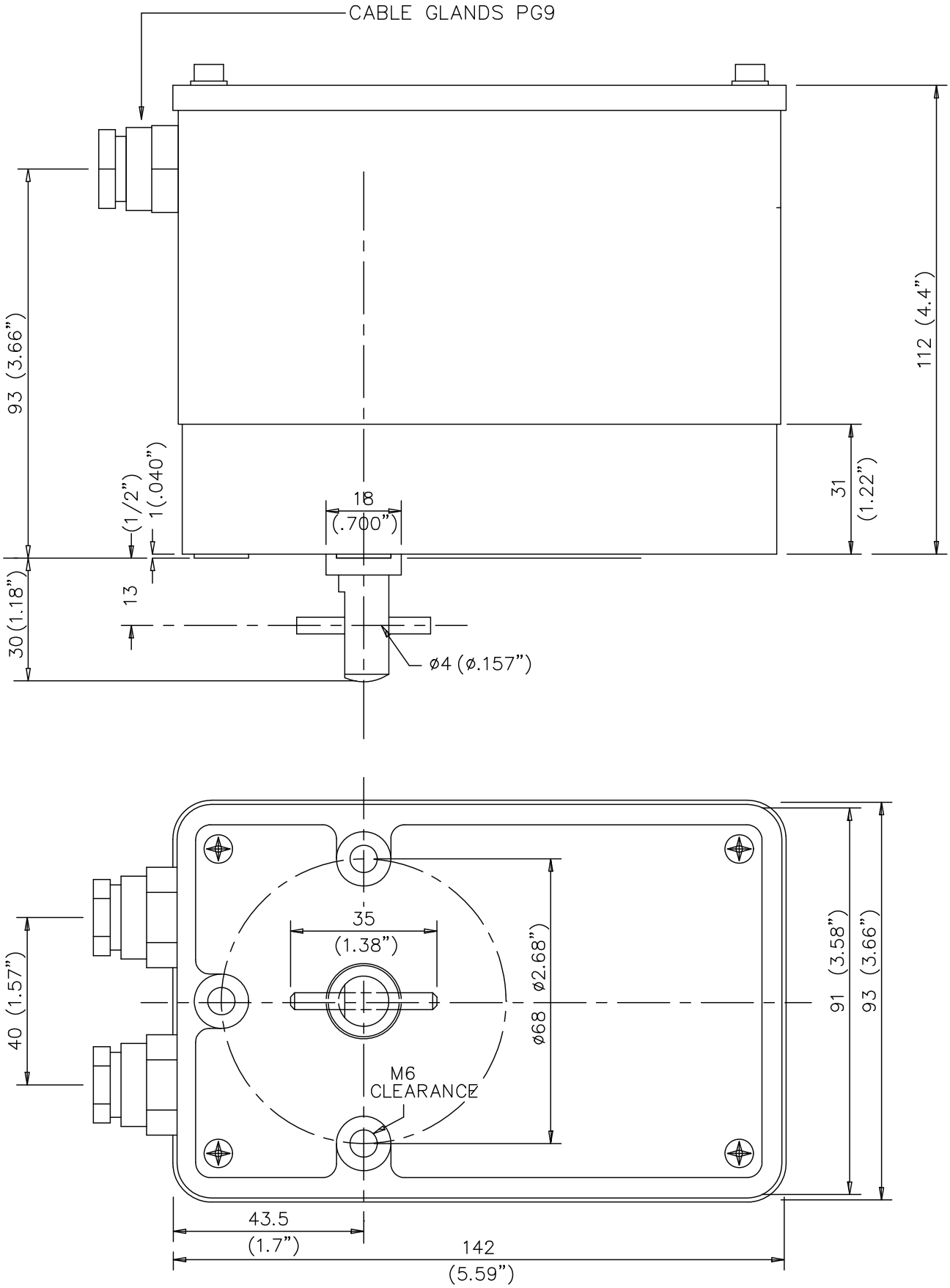

Note:

The Autoflame product must only be installed, set-up, commissioned and adjusted by an Autoflame certified technical engineer.

To adjust the potentiometer loosen the tamper proof screws using a tamper proof screwdriver as supplied by Autoflame Engineering. After adjustment, ensure tightness but do not overtighten. Use fingers only to adjust the position of the potentiometer. Do not raise the potentiometer from the PCB.

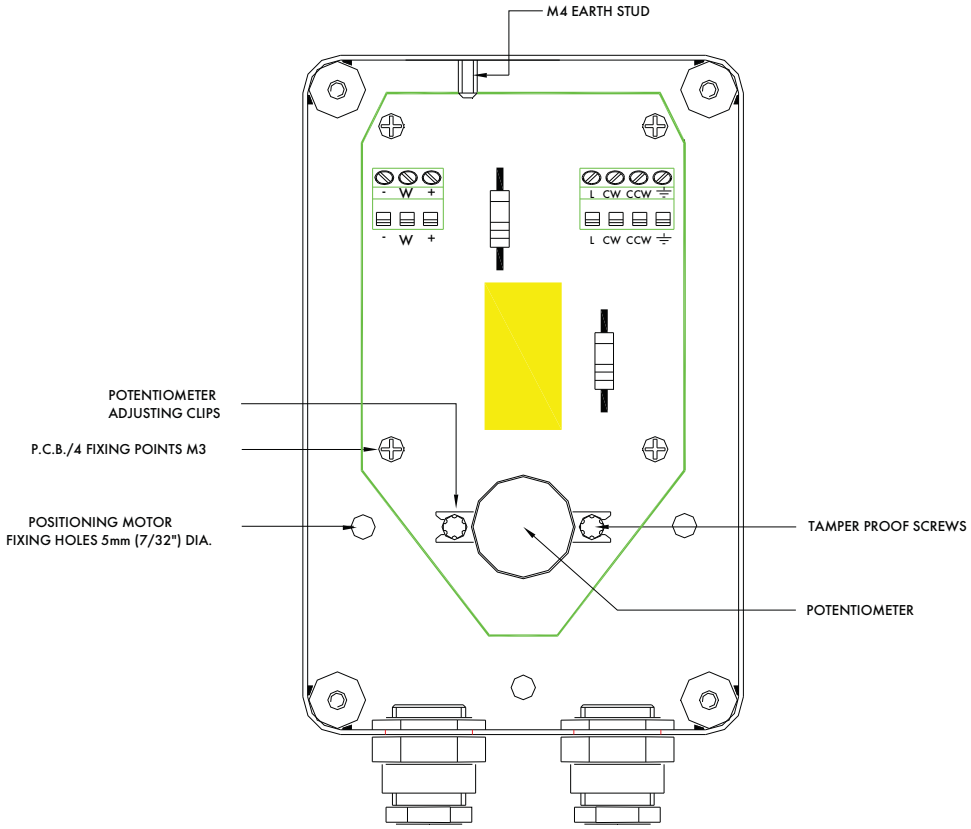

Specification	
Supply Voltage	24/230V, 50/60Hz
Output Shaft Torque	15Nm / 11 ft lbs
Operating Angle	0-90°
Operating Time	Nominal 30 seconds
Max Rated Power	9W
Ambient Temperature	0°C to 60°C / 32°F to 140°F
Industrial Protection Rating	IP54 / NEMA 13
Mounting Angle	360°
Positioning	MM Drive
Drive Motor	Synchronous
Body Material	Mild Steel CR4
Coating	Interpon 700 Powder Coat
Weight	1.85kg
Dimensions	145x112x94
Wiring Connection	PG11 Gland

8.9 Boiler Water Temperature Sensor- part number MM10006

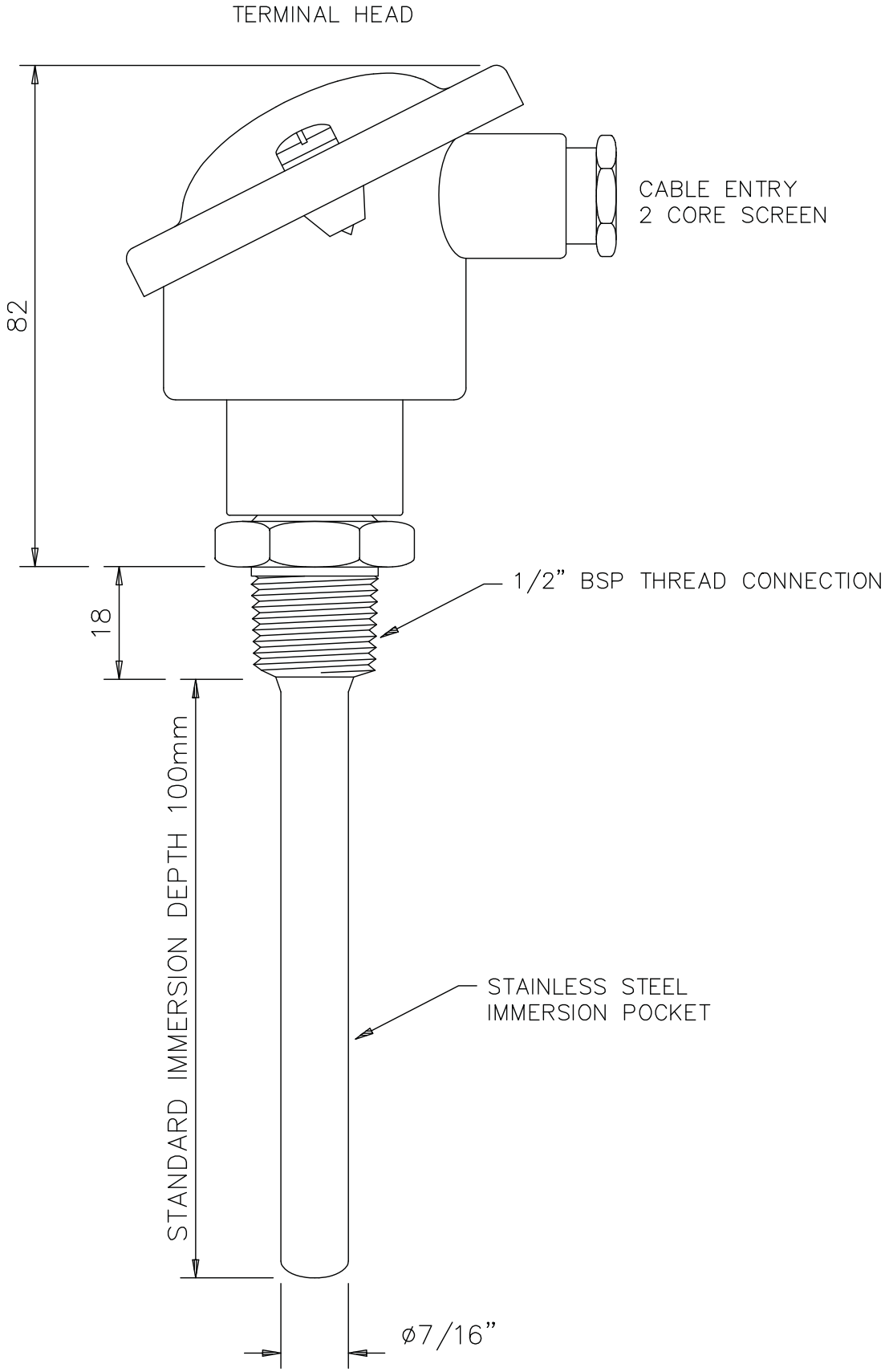

8.10 Industrial Servomotor

Overview/Outline

This system is a rotary type electric actuator, suitable for use with the M.M. module.

The body is made with aluminium die-cast, thus it is light, compact, highly efficient and powerful.

Features

Light and compact.

Easy to handle and suitable for use in narrow spaces.

Simple structure design.

Trouble free mounting on air damper, maintenance and testing.

Manual operation function by crank handle supplied with the servomotor.
Manual operation is only possible when the power is disconnected, with the attached manual crank handle. If manual operation is performed whilst the unit has power this will cause damage.

Protect function.
Thermal protector is built-in to prevent motor burn out by overloading.

Easy for wiring.
Connection is simplified by a terminal block inside.

8.10.1 External Drawings

Appearance and Nomenclature

No	Name
1	Body
2	Autoflame feedback potentiometer
3	Drive unit cover
4	Power instruments cover
5	Control unit/terminal strip cover
6	Output shaft
7	Manual handle shaft
8	Cord lock for conduit connection

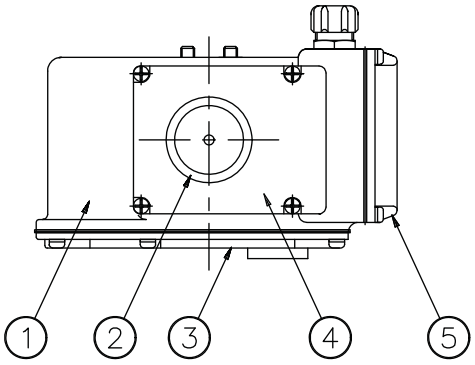

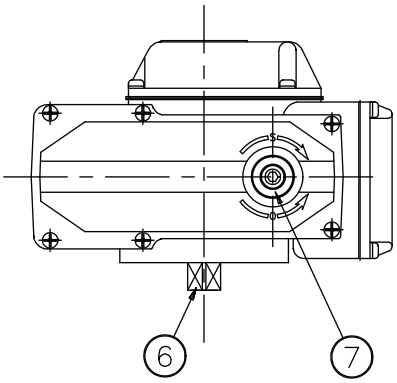

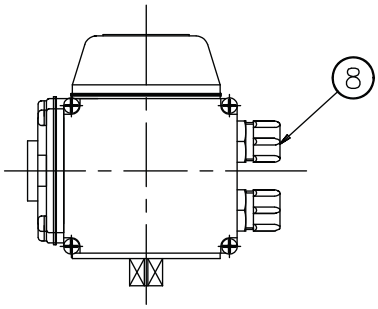

8.10.1.2 Dimensions

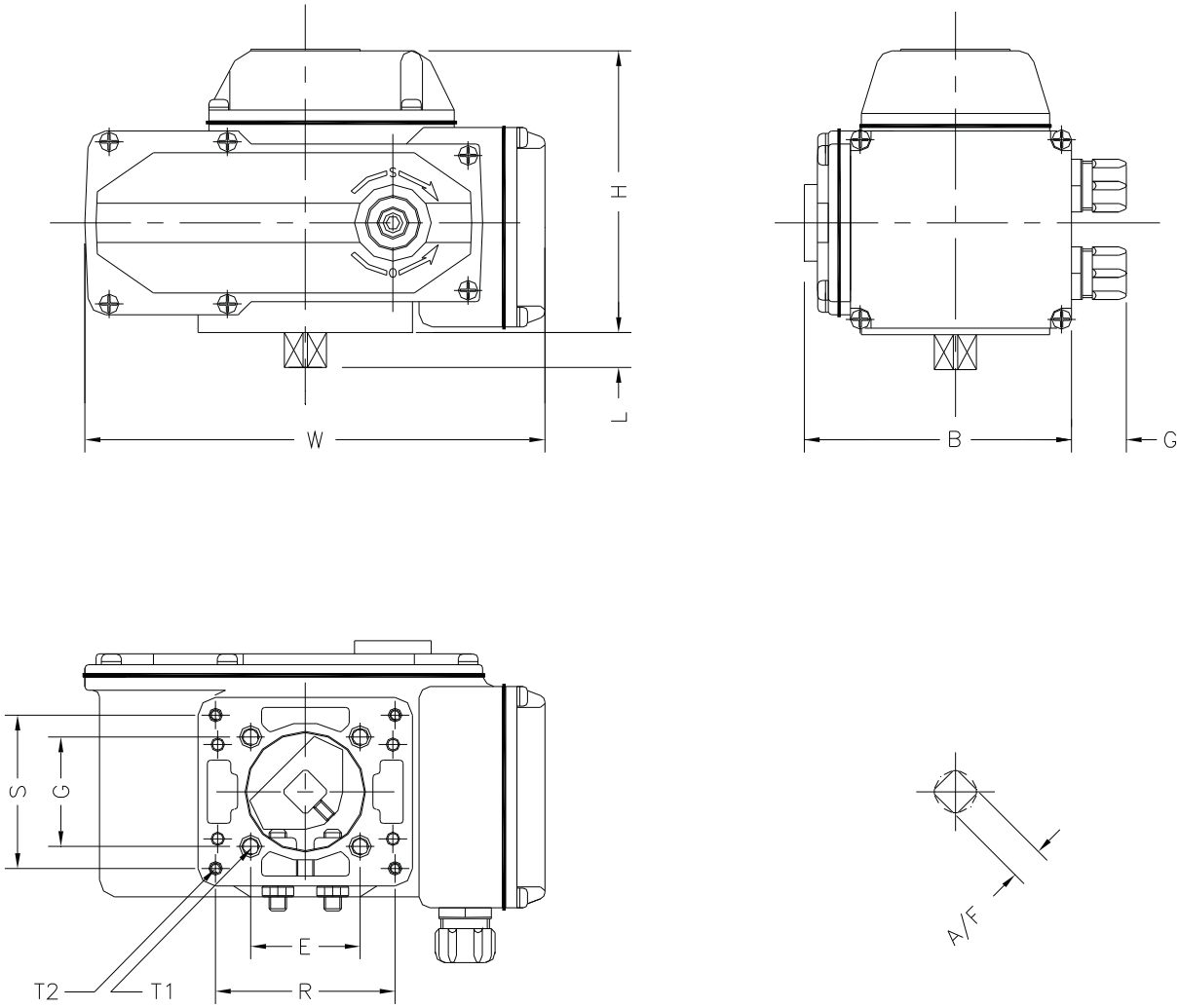

Metric Units:

Part Number	Torque	Dimensions			Shaft Dimensions		Mounting Detail Dimensions			
	Nm	W	H	B	L	A/F	R	S	T1	T2
MM10070	40	159	111	115	12	12	68	60	M8	M6
MM10072	98	208	137	123	16.5	15	82	70	M8	M6
MM10074	200	257	145	157	26.5	23	118	84	M10	M10
MM10078	400	257	145	157	26.5	23	118	84	M10	M10

Imperial Units:

Part Number	Torque	Dimensions			Shaft Dimensions		Mounting Detail Dimensions			
	ft lbs	W	H	B	L	A/F	R	S	T1	T2
MM10070	37	6.26	4.37	4.53	0.47	0.47	2.68	2.36	M8	M6
MM10072	72	8.19	5.39	4.84	0.65	0.59	3.23	2.76	M8	M6
MM10074	148	10.12	5.71	6.18	1.04	0.91	4.65	3.31	M10	M10
MM10078	295	10.12	5.71	6.18	1.04	0.91	4.65	3.31	M10	M10

8.10.2 Specification

Item	Specification
Power	220/240VAC 50/60Hz 110VAC 60Hz
Output Shaft Torque	MM10070- 40Nm (37ft lbs) MM10072- 98Nm (72 ft lbs) MM10074- 200Nm (148ft lbs) MM10078- 400Nm (295ft lbs)
Operating Angle	0-90 degrees
Operating Time	15-30 seconds/50Hz (nominal)
Protect System	Thermal protector built in
Ambient Temperature	-25C - 55C (-13F - 131F)
Rated Current	MM10070- 0.4A/200V (0.75A/100V) MM10072- 0.3A/200V (0.6A/100V) MM10074- 0.45A/200V (1A/100V) MM10078- 0.9A/200V (2A/100V)
Insulation Resistance	100Mohm/500VDC
Withstand Voltage	1500VAC/minute
Manual Operation	Crank handle attached
Stopper	Mechanical stopper- open/close adjustable
Enclosure	IP65/NEMA4
Mounting Angle	360 degrees- all directions
Positioning	M.M. drive
Drive Motor	MM10070- 8W (E type) MM10072- 20W (E type) MM10074- 30W (E type) MM10078- 90W (E type)
Body Material	Die cast aluminium ADC12
Coating	Baking varnish
Weight	MM10070- 2kg (4.4lbs) MM10072- 4.5kg (9.9lbs) MM10074- 9kg (19.8lbs) MM10078- 9.5kg (20.9lbs)
Wiring Conduit	PF1/2 x 1 Resin connector attached

8.10.3 Installation

The Autoflame product must only be installed, set-up, commissioned and adjusted by an Autoflame certified technical engineer.

Positioning

Ambient temperature: Within -25°C to +55°C (–13 F. to +131 F.)

Avoid hazardous ambient conditions.

Depending on the condition of installation, consider to reserve spaces for wiring conduit cover, and manual maintenance works.

Mounting on Air Damper

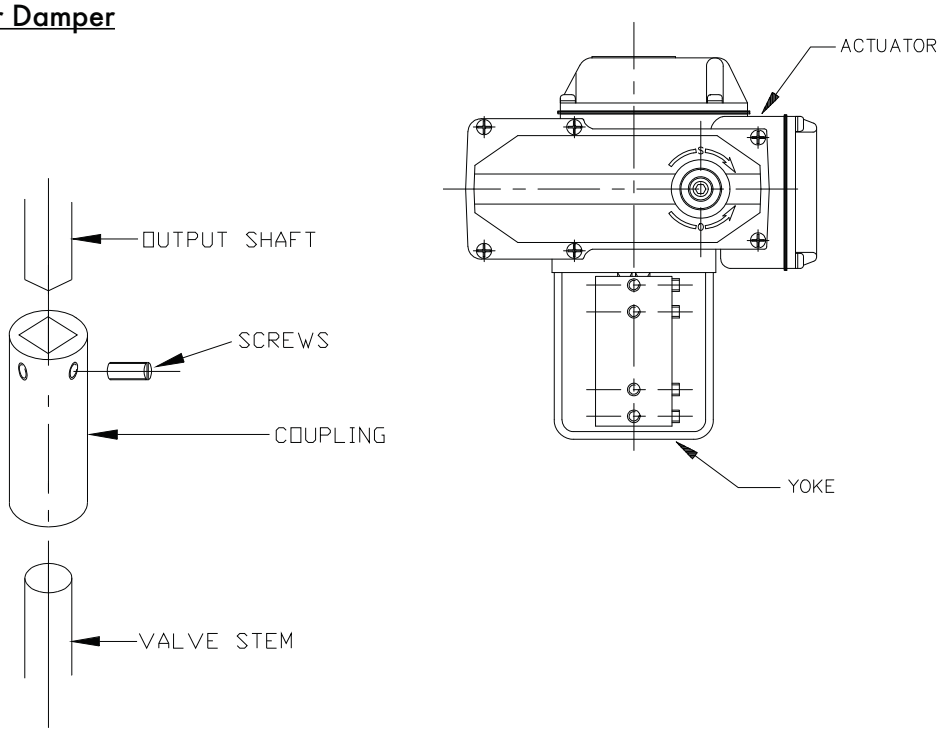

Ensure that the industrial servomotor is not powered before making manual operations.

Move the damper by hand and make sure that it is free then set it at totally closed position. Make sure that the shaft is smooth in motion and there is no decentering/inclination, by turning the manual handle.

Using the Autoflame supplied industrial servomotor mounting brackets, mount the servomotor to the bracket and secure. Then mount this assembly to the damper or valve ensuring that the damper or valve is in the fully closed position and then tighten the bolts and make sure that the assembly is fully secure.

8.10.3.1 Positioning Motor Connections

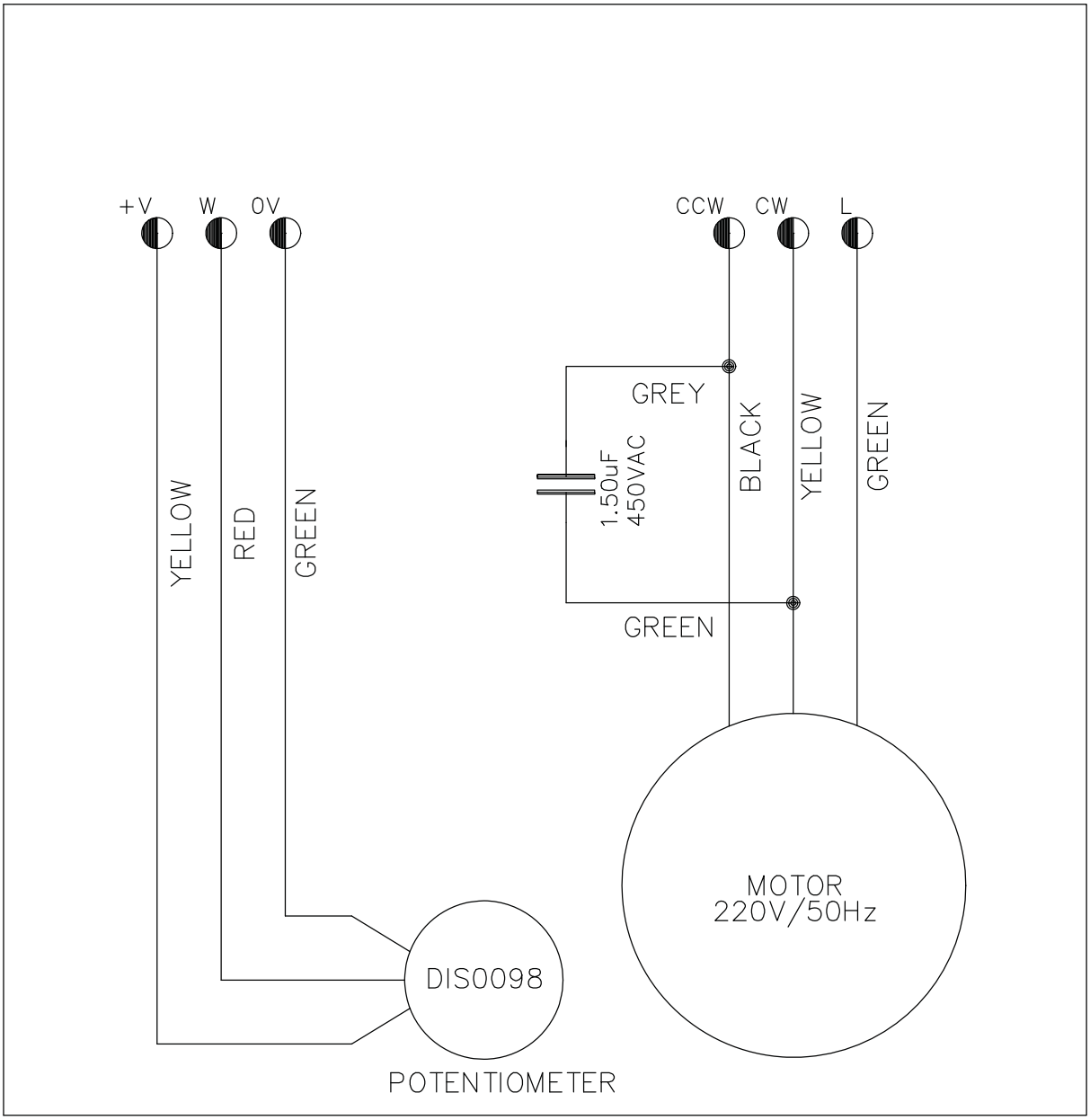

8.10.3.3 Positioning Motor

The Autoflame product must only be installed, set-up, commissioned and adjusted by an Autoflame certified technical engineer.

To adjust the potentiometer loosen the tamper proof screws using a tamper proof screwdriver as supplied by Autoflame Engineering. After adjustment, ensure tightness but do not overtighten. Use fingers only to adjust the position of the potentiometer. Do not raise the potentiometer from the PCB.

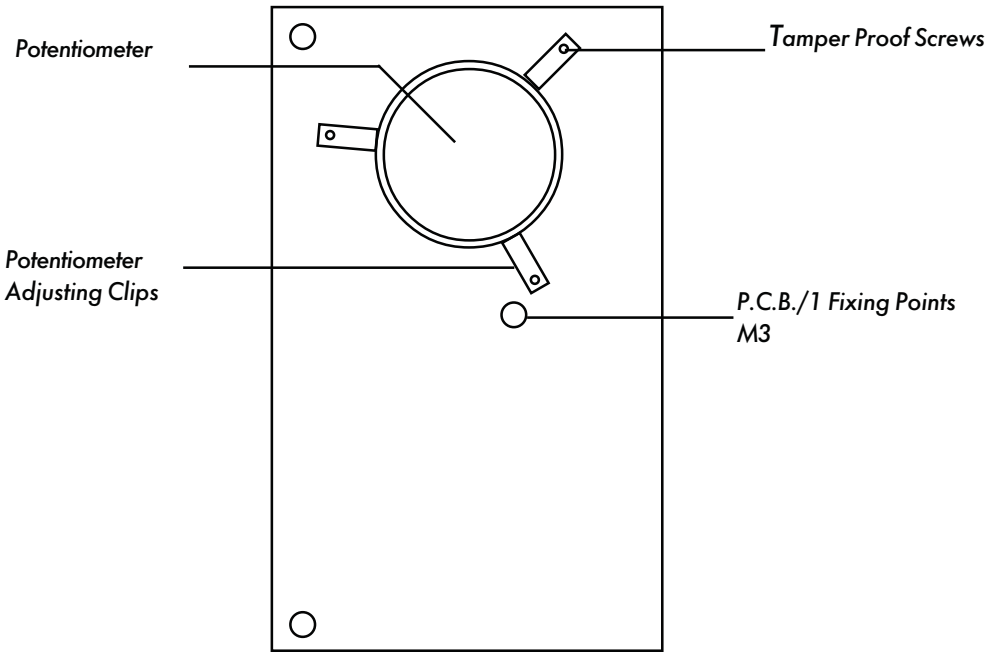

8.10.4 Manual Operation

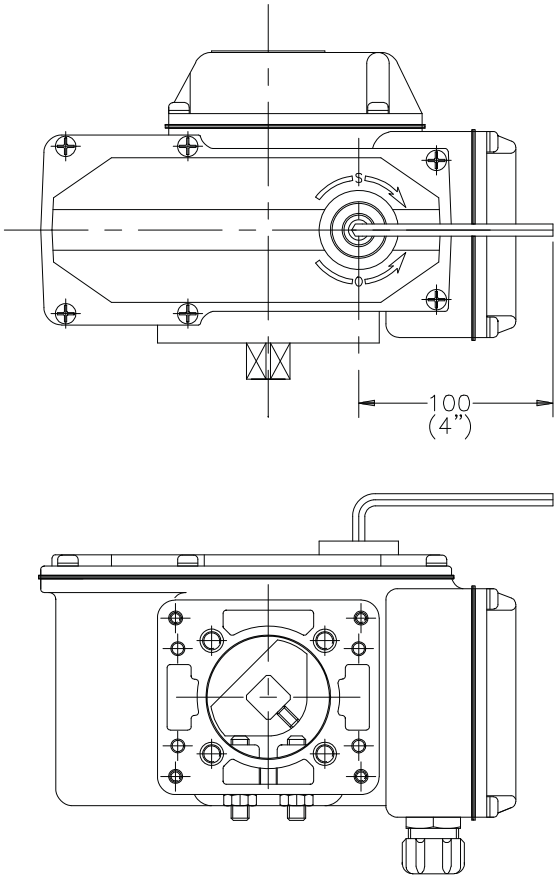

Before starting manual operation, check that the power source is switched off.
Remove rubber cap of the drive unit, and insert the manual handle level into the hexagonal hole.
Turn the manual handle clockwise and the shaft moves in the CLOSE direction.
Turn the manual handle counter clockwise and the shaft moves in the OPEN direction.

Note:

Do not overturn the handle with excessive strength, as otherwise, it may cause problems with the other parts on the servomotor. Any excessive force may damage the servomotor.

If power is not removed then the servomotor will try to return to the original position during manual operation. This may damage the servomotor and may cause physical injury.

Dimensions of Manual Handle

Opposite sides of hexagon shaft (mm):	MM10070/MM10072	5mm
	MM10074/MM10078	6mm
Number of handle turns:	15	
Length of handle (mm):	MM10070/MM10072	100mm
	MM10074/MM10078	120mm

Maintenance

Lubrication: Since the unit is sufficiently lubricated with a long life and pressure proof di-sulfied molybdenum grease (MOS2), no further lubrication is required.

Periodical Test: In case the motor is very seldomly rotated or after a long period of rest, it is suggested to have a periodical test and check if there is no irregularity. Remove power to the servomotor and check manual operation as described above. Check wiring and visually inspect the integrity of the valve.

8.10.5 Troubleshooting

Trouble	Probable Cause	Solution
Motor does not start		
	Power switch is off	Switch on
	Wire/terminals are broken or disconnected	Replace the wire or properly connect the terminals
	Supply voltage is too low/high or incorrect	Check the voltage with a meter
	Effect of the thermal protector (due to a high/low ambient temperature or blocked damper	Lower/raise the ambient temperature or manually open/close the damper when power is removed from the motor

SECTION 9: COMPONENT INFORMATION: PARTS LIST

MM Control Modules

Mk7 & Mini Mk7 MM Burner Management Systems	**Weight (Kgs)**	**Part No.**
MK7 MM Evolution Module *6 Channel with flame safeguard control, 10.4" full colour touch Screen*	3.50	MM70001/E
MK7 MM Evolution Module *With water level capability and first out annunciation. 6 channel, flame safeguard, touch screen*	3.50	MM70001/E/WL
Mini MK7 Evolution Module, 230V *4 Channel with flame safeguard, 2 fuel profiles.*	2.50	MMM7002/E
Mini MK7 Evolution Module, 110V *4 Channel with flame safeguard, 2 fuel profiles.*	2.50	MMM7002/E/110

E.G.A. Components

MM/EGA Combustion Trim or Stand-alone EGA	**Weight (Kgs)**	**Part No.**
Mk7 E.G.A. Sampling Unit *O2, CO2, CO & NO Analyser with touch screen display*	11.00	MM72004
Mk7 E.G.A. Sampling Unit *With touch screen display, only CO2 cell fitted*	11.00	MM72004/NC
Mk7 E.G.A. SO2 Sensor + Extra Pump *Factory fitted & calibrated, price to be added to EGA price*	0.20	EGA70008
Mk7 E.G.A. NO2 Sensor *Factory fitted & calibrated, price to be added to EGA price*	0.20	EGA70009
Mk7 E.G.A. Air Inlet Filter *Filter assembly includes filter material*	2.00	EGA70106
E.G.A. Mk7 Sampling Probe (0-400°C or 32-752°F) *Flue gas sampling probe and thermocouple*	1.00	MM10033
Chilled E.G.A. Enclosure *Front mounted chiller unit to keep EGA cool (Not including EGA)*	0.00	EGAENC
E.G.A. High Temp. Thermocouple *0-1600°C or 32-2912°F*	4.50	EGA20104
E.G.A. External Particulate Filter with Drain solenoid *This part cannot be retro fitted in the field, the EGA must be returned to Autoflame*	2.00	EGA20103/D

Flame Scanners

	Weight (Kgs)	**Part No.**
IR Self Check Scanner *With additional PCB for use with MK6 MM with relay and power supply*	0.20	MM60016
IR Self Check Scanner *For use with MK7*	0.20	MM70017
IR Self Check Scanner *For use with Mini MK7 with relay and power supply*	0.20	MM70017/MINI
Self Check UV Scanner, High Sensitivity *End view only, 1" connection*	0.80	MM60003/HS
Self Check UV Scanner, High Sensitivity *Side View*	0.85	MM60003/HS/SV
Standard UV Scanner *Side view only, complete with clip and plate connection*	0.20	MM60004
Standard UV Scanner *End view only, ½" connection*	0.20	MM60004/U
Standard UV Scanner, High Sensitivity *End view only, ½" connection*	0.20	MM60004/HSU
Swivel Mount Assembly, 1" connection *Mounting adaptor for optimum positioning of UV scanners*	1.50	UVM60003
Swivel Mount Assembly, ½" connection *Mounting adaptor for optimum positioning of UV scanners*	1.50	UVM60004

Air/Gas/Oil Sensors

	Weight (Kgs)	Part No.
Air Pressure Sensor *0 to 65 mBar, 0 to 25"wg, 0 to 1 PSI*	0.42	MM60005
Air Pressure Sensor *0 to 130 mBar, 0 to 50"wg, 0 to 2 PSI*	0.42	MM60013
Gas Pressure Sensor *12.5 to 65 mBar, 5 to 25"wg, 0.18 to 1 PSI*	0.42	MM60006
Gas Pressure Sensor *52 to 340 mBar, 25 to 135"wg, 0.75 to 5 PSI*	0.42	MM60008
Gas Pressure Sensor *115 to 750 mBar, 50 to 300"wg, 1.8 to 11 PSI*	0.42	MM60011
Gas Pressure Sensor *207 to 1380 mBar, 83 to 550"wg, 3 to 20 PSI*	0.42	MM60012
Gas Pressure Sensor *0 to 4 Bar,162 to 1620"wg, 6 to 60 PSI*	0.42	MM60014
Oil Pressure Sensor *0 to 40 Bar, 0 to 600 PSI*	0.42	MM60009

Boiler Load Detectors

	Weight (Kgs)	Part No.
Temp. Detector, 100mm length *0-400°C, 0-752°F*	0.45	MM10006/100
Temp. Detector, 150mm length *0-400°C, 0-752°F*	0.45	MM10006/150
Temp. Detector, 200mm length *0-400°C, 0-752°F*	0.45	MM10006/200
Temp. Detector, 250mm length *0-400°C, 0-752°F*	0.45	MM10006/250
Temp. Detector, 400mm length *0-400°C, 0-752°F*	0.45	MM10006/400
Temp. Detector, 4" length *with a 1/2" electrical conduit adaptor. 0-400°C, 0-752°F*	0.45	MM10006/100U
Temp. Detector, 6" length *with a 1/2" electrical conduit adaptor. 0-400°C, 0-752°F*	0.45	MM10006/150U
Temp. Detector, 8" length *with a 1/2" electrical conduit adaptor. 0-400°C, 0-752°F*	0.45	MM10006/200U
Temp. Detector, 10" length *with a 1/2" electrical conduit adaptor. 0-400°C, 0-752°F*	0.45	MM10006/250U
Temp. Detector, 12" length *with a 1/2" electrical conduit adaptor 0-400°C, 0-752°F*	0.45	MM10006/400U
Pressure Detector, 2-23 Bar	0.21	MM10008
Pressure Detector, 2-38 Bar	0.21	MM10009
Pressure Detector, 0.2-3.8 Bar	0.21	MM10010
Pressure Detector, 0-100 Bar	0.21	MM10017
Pressure Detector, 30-267 PSI	0.21	MM10008/U
Pressure Detector, 30-445 PSI	0.21	MM10009/U
Pressure Detector, 1.5-44.5 PSI	0.21	MM10010/U
Pressure Detector, 0-1500 PSI	0.21	MM10017/U
Lead for Pressure Detector	0.10	LEAD10001

Outside Temperature Control

	Weight (Kgs)	Part No.
Outside Temperature Sensor *-40 to +40 °C / -40 to +104 °F*	0.32	MM60007
Outside Temperature Module *For use with Mini Mk5 Evo/ Mini MK7 Evo and MM60007*	1.00	MM60015

Servo Motors

	Weight (Kgs)	Part No.
Small Servo Motor, 230V 50Hz *4Nm, 3ft lbs*	0.55	MM10005
Small Servo Motor, 24V 50Hz *4Nm, 3ft lbs*	0.55	MM10005/C
Small Servo Motor, 24V 60Hz *4Nm, 3ft lbs*	0.55	MM10005/D
Large Servo Motor, 230V 50/60Hz *25Nm, 18ft lbs*	1.85	MM10004
Large Servo Motor, 24V 50/60Hz *25Nm, 18ft lbs*	1.85	MM10004/D
Industrial Servo Motor 05, 230V *40Nm, 37ft lbs (for feed water control only)*	4.00	MM10070
Industrial Servo Motor 05, 110V *40Nm, 37ft lbs (for feed water control only)*	4.00	MM10070/110
Industrial Servo Motor 10, 230V *98Nm, 72ft lbs*	6.00	MM10072
Industrial Servo Motor 10, 110V *98Nm, 72ft lbs*	6.00	MM10072/110
Industrial Servo Motor 20, 230V *200Nm, 148ft lbs*	6.00	MM10074/B
Industrial Servo Motor 20, 120V *200Nm, 148ft lbs*	6.00	MM10074/B/110
Industrial Servo Motor 40, 230V *400Nm, 295ft lbs*	8.00	MM10078
Industrial Servo Motor 40, 110V *400Nm, 295ft lbs*	8.00	MM10078/110
Industrial Servo Motor 20, 110V (4-20mA) *200Nm, 148 ft lbs (for use with the Mk6 on channel 5/6)*	6.00	MM10079/110
Industrial Servo Motor 40, 110V (4-20mA) *400Nm, 295 ft lbs (for use with the Mk6 on channel 5/6)*	8.00	MM10080/110

Explosion Proof

With ATEx Approval

	Weight (Kgs)	Part No.
Large Servo Motor, 230V 50/60Hz *25Nm, 18ft lbs Ex nA nL IIC T4*	1.85	MM10004/EXP
Large Servo Motor, 24V 50/60Hz *25Nm, 18ft lbs Ex nA nL IIC T4*	1.85	MM10004/D/EXP
Industrial Servo Motor 10, 230V *98Nm, 72ft lbs Ex nA nL IIC T4*	6.00	MM10072/EXP
Industrial Servo Motor 10, 120V *98Nm, 72ft lbs Ex nA nL IIC T4*	6.00	MM10072/110/EXP
Air Pressure Sensor *0 to 65 mBar, 0 to 25"wg, 0 to 1 PSI Ex Na IIC Gc*	0.42	MM60005/EXP
Air Pressure Sensor *0 to 130 mBar, 0 to 50"wg, 0 to 2 PSI Ex Na IIC Gc*	0.42	MM60013/EXP
Gas Pressure Sensor *12.5 to 65 mBar, 5 to 25"wg, 0.18 to 1 PSI Ex Na IIC Gc*	0.42	MM60006/EXP
Gas Pressure Sensor *52 to 340 mBar, 25 to 135"wg, 0.75 to 5 PSI Ex Na IIC Gc*	0.42	MM60008/EXP
Gas Pressure Sensor *115 to 750 mBar, 50 to 300"wg, 1.8 to 11 PSI Ex Na IIC Gc*	0.42	MM60011/EXP
Gas Pressure Sensor *207 to 1380 mBar, 83 to 550"wg, 3 to 20 PSI Ex Na IIC Gc*	0.42	MM60012/EXP
Gas Pressure Sensor *0 to 4 Bar,162 to 1620"wg, 6 to 60 PSI Ex Na IIC Gc*	0.42	MM60014/EXP

End Switch Proving

	Weight (Kgs)	Part No.
End Switch Proving Unit *With 1 metre lead*	1.00	MM70009PPU
Small Oil Valve Base Plate *Allows for End Switch Proving Unit to be Mounted to an existing Oil Valve*	0.10	MM70009OVSM
Large Oil Valve Base Plate *Allows for End Switch Proving Unit to be Mounted to an existing Oil Valve*	0.10	MM70009OVLRG
Air Damper Mounting Kit	0.20	MM70009UMK

End Switch Proving

Modified Gas Valves	Weight (Kgs)	Part No.
ANSI 150lb 2.5" *Modified for Mounting End Switch Proving Unit, Mounting Kit Included*	5.00	GVF46526/30U/VA
ANSI 150lb 3" *Modified for Mounting End Switch Proving Unit, Mounting Kit Included*	6.00	GVF48027/30U/VA
ANSI 150lb 4" *Modified for Mounting End Switch Proving Unit, Mounting Kit Included*	7.00	GVF410026/30U/VA
ANSI 150lb 5" *Modified for Mounting End Switch Proving Unit, Mounting Kit Included*	8.00	GVF42527/30U/VA
ANSI 150lb 6" *Modified for Mounting End Switch Proving Unit, Mounting Kit Included*	9.00	GVF415028/30U/VA
ANSI 150lb 2.5" *Modified for Mounting End Switch Proving Unit, Mounting Kit Included*	9.00	GVF46526/50U/VA
ANSI 150lb 3" *Modified for Mounting End Switch Proving Unit, Mounting Kit Included*	10.00	GVF48027/50U/VA
ANSI 150lb 4" *Modified for Mounting End Switch Proving Unit, Mounting Kit Included*	11.00	GVF410026/50U/VA
ANSI 150lb 5" *Modified for Mounting End Switch Proving Unit, Mounting Kit Included*	12.00	GVF42527/50U/VA
ANSI 150lb 6" *Modified for Mounting End Switch Proving Unit, Mounting Kit Included*	13.00	GVF415028/50U/VA

End Switch Proving *Modified Oil Valves*	**Weight (Kgs)**	**Part No.**
Type 1 - Spillback/By-pass *Modified for Mounting End Switch Proving Unit*	0.60	OVS31015/VA
Type 1 - Metering/Simplex *Modified for Mounting End Switch Proving Unit*	0.60	OVM31015/VA
Type 2 - Spillback/By-pass *Modified for Mounting End Switch Proving Unit*	0.60	OVS32016/VA
Type 2 - Metering/Simplex *Modified for Mounting End Switch Proving Unit*	0.60	OVM32016/VA
Type 3 - Spillback/By-pass *Modified for Mounting End Switch Proving Unit*	1.80	OVS33L17/VA
Type 3 - Metering/Simplex *Modified for Mounting End Switch Proving Unit*	1.80	OVM33L17/VA
Type 4 - Spillback/By-pass *Modified for Mounting End Switch Proving Unit*	1.80	OVS34L18/VA
Type 4 - Metering/Simplex *Modified for Mounting End Switch Proving Unit*	1.80	OVM34L18/VA
Type 5 - Spillback/By-pass *Modified for Mounting End Switch Proving Unit*	0.50	OVS35019/VA
Type 5 - Metering/Simplex *Modified for Mounting End Switch Proving Unit*	0.50	OVM35019/VA
Type 6 - Spillback/By-pass *Modified for Mounting End Switch Proving Unit*	0.50	OVS36020/VA
Type 6 - Metering/Simplex *Modified for Mounting End Switch Proving Unit*	0.50	OVM36020/VA
Type 8 - Spillback/By-pass *Modified for Mounting End Switch Proving Unit*	0.50	OVS38022/VA
Type 8 - Metering/Simplex *Modified for Mounting End Switch Proving Unit*	0.50	OVM38022/VA
Type 9 - Spillback/By-pass *Modified for Mounting End Switch Proving Unit*	0.50	OVS39023/VA
Type 9 - Metering/Simplex *Modified for Mounting End Switch Proving Unit*	0.50	OVM39023/VA

Oil Control Valves

	Weight (Kgs)	Part No.
Type 1 - Spillback/By-pass	0.60	OVS31015
Type 1 - Metering/Simplex	0.60	OVM31015
Type 2 - Spillback/By-pass	0.60	OVS32016
Type 2 - Metering/Simplex	0.60	OVM32016
Type 3 - Spillback/By-pass	1.80	OVS33L17
Type 3 - Metering/Simplex	1.80	OVM33L17
Type 4 - Spillback/By-pass	1.80	OVS34L18
Type 4 - Metering/Simplex	1.80	OVM34L18
Type 5 - Spillback/By-pass	0.50	OVS35019
Type 5 - Metering/Simplex	0.50	OVM35019
Type 6 - Spillback/By-pass	0.50	OVS36020
Type 6 - Metering/Simplex	0.50	OVM36020
Type 8 - Spillback/By-pass	0.50	OVS38022
Type 8 - Metering/Simplex	0.50	OVM38022
Type 9 - Spillback/By-pass	0.50	OVS39023
Type 9 - Metering/Simplex	0.50	OVM39023

Gas Control Butterfly Valves (Threaded)	Weight (Kgs)	Part No.
BSP 25mm (1″)	0.55	GV42521
BSP 40mm (1.5″)	0.70	GV44022
BSP 50mm (2″)	0.74	GV45023
BSP 65mm (2.5″)	0.85	GV46524
BSP 80mm (3″)	0.98	GV48025
BSP 100mm (4")	1.00	GV410026
NPT 25mm (1″)	0.55	GV42521U
NPT 40mm (1.5″)	0.70	GV44022U
NPT 50mm (2″)	0.74	GV45023U
NPT 65mm (2.5″)	0.85	GV46524U
NPT 80mm (3″)	0.98	GV48025U
NPT 100mm (4")	1.00	GV410026U

Gas Control Butterfly Valves (Flanged 30mm)	Weight (Kgs)	Part No.
PN16 65 mm (2.5″)	5.00	GVF46526/30
PN16 80 mm (3″)	6.00	GVF48027/30
PN16 100 mm (4″)	7.00	GVF410026/30
PN16 125 mm (5″)	8.00	GVF12527/30
PN16 150 mm (6″)	9.00	GVF415028/30
ANSI 150lb 65 mm (2.5″)	5.00	GVF46526/30U
ANSI 150lb 80 mm (3″)	6.00	GVF48027/30U
ANSI 150lb 100 mm (4″)	7.00	GVF410026/30U
ANSI 150lb 125 mm (5″)	8.00	GVF12527/30U
ANSI 150lb 150 mm (6″)	9.00	GVF415028/30U

Gas Control Butterfly Valves (Flanged 50mm)	Weight (Kgs)	Part No.
PN16 65 mm (2.5")	9.00	GVF46526/50
PN16 80 mm (3")	10.00	GVF48027/50
PN16 100 mm (4")	11.00	GVF410026/50
PN16 125 mm (5")	12.00	GVF12527/50
PN16 150 mm (6")	13.00	GVF415028/50
ANSI 150lb 65 mm (2.5")	9.00	GVF46526/50U
ANSI 150lb 80 mm (3")	10.00	GVF48027/50U
ANSI 150lb 100 mm (4")	11.00	GVF410026/50U
ANSI 150lb 125 mm (5")	12.00	GVF12527/50U
ANSI 150lb 150 mm (6")	13.00	GVF415028/50U

Flue Gas Recirculation (FGR) Valves	Weight (Kgs)	Part No.
PN16 100 mm (4") *Thickness- 50mm*	0.00	FGRV410026/50
PN16 150 mm (6") *Thickness- 50mm*	0.00	FGRV415028/50
PN16 200 mm (8") *Thickness- 50mm*	0.00	FGRV420029/50
PN16 250 mm (10") *Thickness- 50mm*	0.00	FGRV425030/50
PN16 300 mm (12") *Thickness- 50mm*	0.00	FGRV430031/50
ANSI 150lb 100 mm (4") *Thickness- 50mm*	0.00	FGRV410026/50U
ANSI 150lb 150 mm (6") *Thickness- 50mm*	0.00	FGRV415028/50U
ANSI 150lb 200 mm (8") *Thickness- 50mm*	0.00	FGRV420029/50U
ANSI 150lb 250 mm (10") *Thickness- 50mm*	0.00	FGRV425030/50U
ANSI 150lb 300 mm (12") *Thickness- 50mm*	0.00	FGRV430031/50U

Water Level Control Equipment

	Weight (Kgs)	Part No.
Expansion PCB with Extended Housing *supplied with MK7 software, housing and pillars. Contact Autoflame for software version required.*	0.75	WLCPCBH7
Expansion PCB with Extended Housing *supplied with MK6 software, housing and pillars. Serial Numbers 2000 and above only*	0.75	WLCPCBH6
Replacement Expansion PCB *supplied with MK7 software. Contact Autoflame for software version required.*	0.55	WLCPCB7
Replacement Expansion PCB *supplied with MK6 software. Serial Numbers 2000 and above only*	0.55	WLCPCB6
Temp. Detector, 100mm length *0-400°F, 0-752°F*	0.45	MM10006/100
Temp. Detector, 150mm length *0-400°F, 0-752°F*	0.45	MM10006/150
Temp. Detector, 200mm length *0-400°F, 0-752°F*	0.45	MM10006/200
Temp. Detector, 250mm length *0-400°F, 0-752°F*	0.45	MM10006/250
Temp. Detector, 400mm length *0-400°F, 0-752°F*	0.45	MM10006/400
Temp. Detector, 4" length *with a 1/2" electrical conduit adaptor. 0-400°C, 0-752°F*	0.45	MM10006/100U
Temp. Detector, 6" length *with a 1/2" electrical conduit adaptor. 0-400°C, 0-752°F*	0.45	MM10006/150U
Temp. Detector, 8"length *with a 1/2" electrical conduit adaptor. 0-400°C, 0-752°F*	0.45	MM10006/200U
Temp. Detector, 10" length *with a 1/2" electrical conduit adaptor. 0-400°C, 0-752°F*	0.45	MM10006/250U
Temp. Detector, 12" length *with a 1/2" electrical conduit adaptor 0-400°C, 0-752°F*	0.45	MM10006/400U
Capacitance Probe 20" (500mm)	1.50	WLCP500
Capacitance Probe 30" (750mm)	1.50	WLCP750
Capacitance Probe 40" (1000mm)	1.50	WLCP1000
Capacitance Probe 50" (1250mm)	1.50	WLCP1250
Capacitance Probe 60" (1500mm)	1.50	WLCP1500
TDS probe and assembly with 1/2" modulating valve *c/w probe, modulating valve, servomotor 230V*	3.00	TDS70001/M
TDS probe and assembly with 3/4" modulating valve *c/w probe, modulating valve, servomotor 230V*	3.00	TDS70001/M
TDS probe and assembly with 1/2" modulating valve *c/w probe, modulating valve, servomotor 24V*	3.00	TDS70001/M/D
TDS probe and assembly with 3/4" modulating valve *c/w probe, modulating valve, servomotor 24V*	3.00	TDS70001/M/D
TDS probe and assembly with solenoid valve, 230V *supplied with complete assembly, including probe and solenoid valve*	3.00	TDS70001
TDS probe and assembly with solenoid valve, 110V *supplied with complete assembly, including probe and solenoid valve*	3.00	TDS70001/110
TDS Solenoid Valve only *230V solenoid*	1.00	TDS70002
TDS Solenoid Valve only *110V solenoid*	1.00	TDS70002/110
TDS Probe only	2.00	TDS70003

Feed Water Valves

Complete with Coupling and Mounting Assembly	Weight (Kgs)	Part No.
Threaded Feed Water Valve BSP/NPT (0.5"/15mm) *0.5" Feed water valve with coupling*	4.00	WLCVO15
Threaded Feed Water Valve BSP/NPT (0.75"/20mm) *0.75" Feed water valve with coupling*	5.00	WLCVO20
Flanged Feed Water Valve PN40 (1"/25mm) *1" Feed water valve with coupling*	7.00	WLCVO25/FL
Flanged Feed Water Valve PN40 (1.5"/40mm) *1.5" Feed water valve with coupling*	8.00	WLCVO40/FL
Flanged Feed Water Valve PN40 (2"/40mm) *2" Feed water valve with coupling*	9.00	WLCV050/FL
Flanged Feed Water Valve ANSI 300lb (1"/25mm) *1" Feed water valve with coupling*	7.00	WLCVO25/FLU
Flanged Feed Water Valve ANSI 300lb (1.5"/40mm) *1.5" Feed water valve with coupling*	8.00	WLCVO40/FLU
Flanged Feed Water Valve ANSI 300lb (2"/40mm) *2" Feed water valve with coupling*	9.00	WLCV050/FLU

D.T.I. Data Transfer Interface Modules

Remote Monitoring and Control	Weight (Kgs)	Part No.
DTI System Package, 230V +Internal Modem *Modbus + Metasys, Win PC DTI + CEMS software and DTI-PC comms lead*	4.50	DTI60100/MD/230
DTI System Package, 110V +Internal Modem *Modbus + Metasys, Win PC DTI + CEMS software and DTI-PC comms lead*	4.50	DTI60100/MD/110
DTI System Standard Package, 230V *Modbus + Metasys, Win PC DTI + CEMS software and DTI-PC comms lead*	4.50	DTI60100
DTI System Standard Package, 110V *Modbus + Metasys, Win PC DTI + CEMS software and DTI-PC comms lead*	4.50	DTI60100/110
Digital I/O Module, 230V *16 x 230/110V Inputs, 8 x volt free outputs*	1.00	DTI20020
Digital I/O Module, 110V *16 x 230/110V Inputs, 8 x volt free outputs*	1.00	DTI20020/110
Analogue I/O Module, 230V *6 x 4-20mA Input & Output*	1.00	DTI20021
Analogue I/O Module, 110V *6 x 4-20mA Input & Output*	1.00	DTI20021/110
DTI Internal Modem (Worldwide) *Replacement or upgrade. Field installed. Serial Numbers 10,000 and above only*	0.25	DTI20025

PC Software and Accessories

	Weight (Kgs)	Part No.
Serial to Ethernet Converter *MOXA 485/422/232, with 12V power supply.*	0.50	DTI70070
MM Infrared Upload/Download Software and IR Lead *MM service and commissioning aid and first out annunciation configuration*	0.13	MM60010
DTI-PC Communications Lead Standard Serial Lead *DTI RS232 PC port to PC RS232 port*	0.25	DTI60022
DTI-PC Communication Line Driver and Lead *RS232 to RS422 converter, PSU (specify voltage) and PC lead*	0.50	DTI20012

MM System Spares	Weight (Kgs)	Part No.
Mk7 MM Software* *Includes 2 EPROMS and display SD card*	0.30	MK7PROMS
Mk7 MM Software with WLC MM software* *Includes 3 EPROMS and display SD card*	0.40	MK7PROMS/WL
Mk7 EGA Software* *Includes 1 EPROM and display SD card*	0.20	MK7EGAPROMS
Mk6 Evolution MM Software PROMs, Set of 3 *	0.20	MK6PROMS/E
Mk6 Evolution with WLC MM Software PROMs, Set of 4	0.20	MK6PROMS/E/WL
Mk6 MM Software PROMs, Set of 3 *	0.20	MK6PROMS
MK6 or MK7 MM Connector Plugs *Set of 9*	0.50	CON1060
Mini Mk6 MM Connector Plugs *Set of 7*	0.50	CON1064
MM Enclosure Mounting Clamps *Set of 4*	0.10	ENC10061
MM Water Level enclosure + pillars	0.20	ENC10065
Water Level Control Connector Plugs *Set of 5*	0.50	CON1068
2A (T) Fuse *Set of 10*	0.10	FU10034
6.3A (T) Fuse *Set of 10- mini Mk6 and Mk6 only*	0.10	FU10026
(TE5) 2A (T) Fuse *Set of 10- mini Mk6 and Mk6 only*	0.10	FU10027
(TE5) 630 mA (T) Fuse *Set of 10- mini Mk6 and Mk6 only*	0.10	FU10028
(TE5) 0.315A (T) Fuse *Set of 10- mini Mk5 EVO only*	0.10	FU10024
5A (T) Fuse *Set of 10- Mini Mk5 EVO only*	0.10	FU10035
630 mA (T) Fuse *Set of 10- mini Mk5 only*	0.10	FU10025
125 mA (220V) Fuse *Set of 10- Mk5 only*	0.10	FU10022
250 mA (110V) Fuse *Set of 10- Mk5 only*	0.10	FU10023
500 mA (T) Fuse *Set of 10 Mk 7*	0.10	FU10040
1A (T) Fuse *Set of 10 Mk 7*	0.10	FU10041
2.5A (T) Fuse *Set of 10 Mk 7*	0.10	FU10042

EGA System Spares	Weight (Kgs)	Part No.
Mk7 O2 Sensor *For the Mk7 EGA*	0.02	SP70004
Mk7 CO2 Sensor *For the Mk7 EGA This part cannot be changed in the field, EGA must be returned to Autoflame*	0.09	SP70005
Mk7 NO Sensor *For the Mk7 EGA*	0.04	SP70007
Mk7 CO Sensor *For the Mk7 EGA*	0.04	SP70008
Mk7 SO2 Sensor *For the Mk7 EGA*	0.01	SP70013
Mk7 NO2 Sensor *For the Mk7 EGA*	0.04	SP70037
Mk7 EGA Replacement Air Inlet Filter *For the Mk7 EGA*	0.06	EGA70107
EGA Fan *For the Mk7 and Mk6 EGA*	0.10	SP10035
EGA Fuse *For the Mk7 and Mk6 EGA*	0.10	SP1040
EGA Pump 24V *For the Mk7 and Mk6 EGA*	0.33	SP70010
EGA Replacement Internal Filter *For the MK7 and Mk6 EGA*	0.06	SP10011
EGA Type K Thermocouple only *3m (12ft) cable length*	0.25	SP1044
EGA Type K Thermocouple only *5m (20ft) cable length*	0.25	SP1044/5
EGA Type K Thermocouple only *10m (40ft) cable length*	0.25	SP1044/10
EGA Connector Plugs *16 poles 1 set of 2 plugs (For the Mk7 and Mk6 EGA)*	0.50	CON1010
EGA Replacement Mk7 Sampling Probe Filter & Tubing *For the Mk7 EGA Probe, 3m (12ft), 5m (20ft), 10m (40ft) Lengths available as standard*	0.15	SP70012
EGA Replacement Mk6 Sampling Probe Filter & Tubing *For the Mk6 EGA Probe, 3m (12ft), 5m (20ft), 10m (40ft) Lengths available as standard*	0.15	SP10012
Mk6 O2 Sensor to be supplied without cell holder *For the MK6 EGA Cell holders will be recycled if returned to Autoflame*	0.02	SP10004
Mk6 CO2 Sensor *For the Mk6 EGA, only includes a new style CO2 sensor*	0.09	SP70006
Mk6 CO2 Sensor Conversion Kit *For Mk6 EGA, includes CO2 cell and kit to upgrade Mk6 EGA for use with new CO2 sensor.*	0.10	SP70006/KIT
Mk6 NO Sensor *For the Mk6 EGA*	0.04	SP10007
Mk6 CO Sensor *For the Mk6 EGA*	0.04	SP10008
Mk6 SO2 Sensor *For the Mk6 EGA*	0.01	SP10013
Mk6 NO2 Sensor *For the Mk6 EGA*	0.04	SP10037
Mk6 EGA Replacement External Particulate Filter *For the Mk6 EGA*	0.06	SP10018

O2 Interface Modules

	Weight (Kgs)	Part No.
O2 Interface Module, 230V	0.65	MM10013
O2 Interface Module, 110V	0.65	MM10013/110

DTI System Spares

	Weight (Kgs)	Part No.
Mk6 DTI Fuse	0.10	SP1060
Mk6 DTI Connector Plugs	0.50	CON1065
Digital I/O Connector Plugs	0.50	CON1066
Analogue I/O Connector Plugs	0.50	CON1067

Sundries and Spare Parts

	Weight (Kgs)	Part No.
M.M./E.G.A. Technical Manual, Hard Copy *MK7 Version*	1.00	SP10001
M.M./E.G.A. Technical Manual, CD-ROM *MK7 Version*	0.10	SP10001/CD
Autoflame M.M./E.G.A. Sales Brochure *US/Letter format*	0.10	SP2000/US
Tamper Proof Screwdriver *Setting up servo motors*	0.07	SP10002
Transformer, 230-24V *UK specification for servo motors*	0.65	SP10003
Transformer, 110-24V *USA specification for servo motors*	0.65	SP10003/110
Ferrite Core Set *3 off*	0.22	SU10010
Anti Voltage Surge Module, 230V	0.15	SU10011
Anti Voltage Surge Module, 110V	0.15	SU10011/110
Electrical Snubbed, 230V* *Contact Autoflame sales depart. For type reference prior to ordering - type ref must be shown on PO*	0.05	SU10030
Electrical Snubbed, 110V* *Contact Autoflame sales depart. For type reference prior to ordering - type ref must be shown on PO*	0.05	SU10040

Servomotor Spares

	Weight (Kgs)	Part No.
Small Servo Fixing Screws *M5 x 35mm, set 4*	0.01	F5015
Small Servo Mounting Bracket/Coupling *Retro fit application for burner air damper*	0.50	SP10015
Small Valve to Large Servo Mounting Coupling *Gas valve only applications*	0.50	SP10017
Large Servo Fixing Screws *M6 x 40mm, set 4*	0.01	F6015
Large Servo Mounting Bracket/Coupling *Retrofit application for burner air damper*	0.50	SP10016
Industrial Servo 05 Mounting Bracket/Coupling *For MM10070*	0.80	SP10028/05
Industrial Servo 10 Mounting Bracket/Coupling *For MM10072*	0.80	SP10028/10
Industrial Servo 20/40 Mounting Bracket/Coupling *For MM10074/B & MM10078*	1.00	SP10028/20

Oil Valve Spares

	Weight (Kgs)	Part No.
O-ring Type 1,2,5,6,8,9 Small Oil Valve *Set 2*	0.01	OR70003
O-ring Type 3,4,7 Large Oil Valve *Set 2*	0.01	OR70004

Feedwater Valve Repair Kits

	Weight (Kgs)	Part No.
0.5" Feedwater Valve Repair Kit *Replacement parts for feedwater valves, includes screws, O-rings and PTFE liner.*	0.02	WLCV015/KIT
0.75" Feedwater Valve Repair Kit *Replacement parts for feedwater valves, includes screws, O-rings and PTFE liner.*	0.02	WLCV020/KIT
1" Feedwater Valve Repair Kit *Replacement parts for feedwater valves, includes screws, O-rings and PTFE liner.*	0.02	WLCV025/KIT
1.5" Feedwater Valve Repair Kit *Replacement parts for feedwater valves, includes screws, O-rings and PTFE liner.*	0.02	WLCV040/KIT
2" Feedwater Valve Repair Kit *Replacement parts for feedwater valves, includes screws, O-rings and PTFE liner.*	0.02	WLCV050/KIT

Cables

Price per 100m	Weight (Kgs)	Part No.
Screened Cable 1 core *16-02-1C*	5.00	CAB50001
Screened Cable 2 core *16-02-2C*	5.00	CAB50002
Screened Cable 3 core *16-02-3C*	5.00	CAB50003
Screened Cable 4 core *16-02-4C*	5.00	CAB50004
Screened Cable 6 core *16-02-6C*	5.00	CAB50006
Screened Cable 8 core *16-02-8C*	5.00	CAB50008
Screened Cable 10 core *16-02-10C*	5.00	CAB50010
Screened Data Cable 1 pair	5.00	CAB50020

SECTION 10: APPENDIX

10.1 TERMS AND CONDITIONS 2

10.2 PATENTS AND INTERNATIONAL APPROVALS 2

10.3 CONVERSION DATA 3

10.3.1 Calorific Fuel Data 3

10.3.1.1 Conversion Factor for Imperial Gas Flow Meters 4

10.3.2 Gas Volume Conversion Factors - Measured conditions to standard reference 5

10.1 TERMS AND CONDITIONS

All equipment and services offered and sold by Autoflame Engineering are subject to our published terms and conditions of business a copy of which is supplied with each consignment of goods and a copy of which will be supplied separately on request.

All terms and conditions are subject to English law.

10.2 PATENTS AND INTERNATIONAL APPROVALS

For all information regarding current patents and approvals, please contact salesinfo@autoflame.com or visit our website at www.autoflame.com.

10.3 CONVERSION DATA

10.3.1 Calorific Fuel Data

Stats	Kerosene SG	Gas Oil CI/SH	Light fuel Oil SG	Medium fuel Oil SG	Heavy Fuel Oil SG
Relative density 15.6°C (60°F) approx. / = litres x = kg	0.79	0.835	0.93	0.94	0.96
Flash point (closed) min °C (°F)	37.8 (100)	65.6 (150)	65.6 (150)	65.6 (150)	65.6 (150)
Viscosity kinematic (cSt) at					
15.6°C (60°F) approx.	2.0	-	-	-	-
37.8°C (100°F) approx.	-	3.0	-	-	-
82.2°C (180°F) approx.	-	-	12.5	30	70
Equivalent Redwood No.1 Viscosity at 37.8°C (100°F)	-	33 approx	250 max	1000 max	3500 max
Freezing point °C / °F	Below -40	Below -40	Below -40	Below -40	Below -40
Cloud point °C max	-	-2.2	-	-	-
Gross calorific values					
KJ/kg approx.	46,520	45,590	43,496	43,030	42,800
Btu/lb approx.	20,000	19,600	18,700	18,500	18,400
KWh/litre approx.	10.18	10.57	11.28	11.22	11.42
Therms/gallon approx.	1.58	1.64	1.75	1.74	1.77
kW/kg	-	12.66	12.08	-	11.89
Sulphur content % wt.	0.2	0.6	2.3	2.4	2.5
Water content % vol.	Negligible	0.05	0.10	0.20	0.30
Sediment content % wt	-	Negligible	0.20	0.03	0.04
Ash content % wt	-	Negligible	0.02	0.03	0.04
Mean specific heat between 0°C - 100°C approx.	0.50	0.49	0.46	0.45	0.45
Volume correction factor per 1°C	0.00083	0.00083	0.0007	0.0007	0.00068
Volume correction factor per 1°F	0.00046	0.00046	0.00039	0.00039	0.00038
Btu/U.S. gallon (US standard)	-	140,000	-	150,000	160,000
Lb/U.S. gallon (US standard)	-	7.01	-	-	7.01
% lighter than water		20%			4%
1 u.s. Gallon of oil / ft of air		1402			

10.3.1.1 Conversion Factor for Imperial Gas Flow Meters

Required Data:	Pressure of gas at meter in "wg	
	Required gas flow in ft^3/min	
Calculations:	Correction factor	= (pressure of gas at meter x 0.00228) + 0.948
	Reading on gas meter	= required gas flow / correction factor
Example:	Pressure of gas at meter	= 58" wg
	Required gas flow	= 95 ft^3/min
	Conversion factor	= (58 x 0.00228) + 0.948 = 1.08
	Reading on Meter	= 95 / 1.08 = 88 ft^3/min

Correction Factor for burners significantly above sea level. I.e. >200m (1 ft = 0.3048m)

Height above sea level in meters, Calculation for correction factor: =

(Pressure of gas at meter x 0.00228) + (0.948 – (height above sea level x 0.0001075))

Example: As above but 250 m above sea level:
Correction factor = (58x0.00228) + (0.948 – (250 x 0.0001075)) = 1.05

10.3.2 Gas Volume Conversion Factors - Measured conditions to standard reference

Assumed gas temperature	10 °C	50 °F
Standard pressure	e 760 mmHg	101.3612 Kpa
Standard temperature	15.56 °C	
Ambient pressure	101.325 Kpa	

Wg "	PSI	mmH2O	mmHg	Kpa	mBar	Conversion factor
1	0.036	25.4	1.867	0.249	2.49	1.0218
2	0.072	50.8	3.734	0.498	4.98	1.0243
3	0.108	76.2	5.601	0.747	7.47	1.0268
4	0.144	101.6	7.468	0.996	9.96	1.0293
5	0.181	127	9.335	1.245	12.451	1.0318
6	0.217	152.4	11.202	1.494	14.941	1.0343
7	0.253	177.8	13.069	1.743	17.431	1.0368
8	0.289	203.2	14.936	1.993	19.921	1.0393
9	0.325	228.6	16.804	2.242	22.411	1.0418
10	0.361	254	18.671	2.491	24.901	1.0443
15	0.542	381	28.006	3.736	37.352	1.0569
20	0.722	508	37.341	4.981	49.802	1.0694
25	0.903	635	46.677	6.227	62.253	1.0819
30	1.083	762	56.012	7.472	74.703	1.0944
35	1.264	889	65.347	8.717	87.154	1.107
40	1.444	1016	74.682	9.963	99.604	1.1195
45	1.625	1143	84.018	11.208	112.055	1.132
50	1.805	1270	93.353	12.453	124.505	1.1445
55	1.986	1397	102.688	13.699	136.956	1.1571
60	2.166	1524	112.024	14.944	149.406	1.1696
65	2.347	1651	121.359	16.189	161.857	1.1821
70	2.527	1778	130.694	17.435	174.307	1.1947
75	2.708	1905	140.03	18.68	186.758	1.2072
80	2.889	2032	149.365	19.925	199.208	1.2197
85	3.069	2159	158.7	21.171	211.659	1.2322
90	3.25	2286	168.035	22.416	224.109	1.2448
95	3.43	2413	177.371	23.661	236.56	1.2573
100	3.611	2540	186.706	24.907	249.01	1.2698
110	3.972	2794	205.377	27.397	273.911	1.2949
120	4.333	3048	224.047	29.888	298.812	1.3199
130	4.694	3302	242.718	32.379	323.713	1.345
140	5.055	3556	261.388	34.869	348.614	1.37
150	5.416	3810	280.059	37.36	373.515	1.3951
160	5.777	4064	298.73	39.851	398.416	1.4201
170	6.138	4318	317.4	42.341	423.317	1.4452
180	6.499	4572	336.071	44.832	448.218	1.4703
190	6.86	4826	354.741	47.323	473.119	1.4953
200	7.221	5080	373.412	49.813	498.02	1.5204

How to use this information:-

1. Measure Volumetric flow of gas for 1min in ft3 (i.e. ft3/min). Note 1m3 = 35.31ft3

2. Multiply this volume flow by 60 to give volumetric flow per hour (i.e. ft3/hr).

3. Measure the pressure of the gas supply.

4. Use the table above to obtain a conversion factor.

5. Multiply the volume flow per hour by the conversion factor to obtain a volume at reference conditions.

6. For natural gas, the calorific value is typically 1000 Btu/ft3. To obtain the firing rate of the boiler at standard reference conditions multiply the volume at reference conditions by 1000.

Represented as an equation:-
Firing rate = (Measured Volumetric flow per minute x 60 x Conversion factor x 1000) Btu/hr