M.M./E.G.A. Technical Manual

Mk6	Mini Mk6	Mini Mk5
MM60001	MMM60016	MMM50016/IR

Certificate No. FM27218
BS EN ISO9001 : 1994

Issued by:

AUTOFLAME ENGINEERING LIMITED
Unit 19, Bellingham Trading Estate
Franthorne Way, Bellingham
London SE6 3BX

Tel. +44 (0)20 8695 2000
Fax. +44 (0)20 8695 2010
Email: sales@autoflame.com
Website: http://www.autoflame.com/

Registered Holder:

Company:

Department:

Autoflame Engineering's policy is one of continuous improvement in both design and manufacture. We therefore reserve the right to amend specifications and/or data without prior notice. All details correct at time of going to press.

INDEX

Important Notes

A knowledge of combustion related procedures and commissioning is essential before embarking work on any of the M.M./E.G.A. systems. This is for safety reasons and effective use of the M.M./ E.G.A. system. Hands on training is required. For details on schedules and fees relating to group training courses and individual instruction, please contact the Autoflame Engineering Ltd. offices at the address listed on the front.

Short Form - General Terms and Conditions

A full statement of our business terms and conditions are printed on the reverse of all invoices. A copy of these can be issued upon application, if requested in writing.

The System equipment and control concepts referred to in this Manual ***MUST*** be installed, commissioned and applied by personnel skilled in the various technical disciplines that are inherent to the Autoflame product range, i.e. combustion, electrical and control.

The sale of Autoflame's systems and equipment referred to in this Manual assume that the dealer, purchaser and installer has the necessary skills at his disposal. i.e. A high degree of combustion engineering experience, and a thorough understanding of the local electrical codes of practice concerning boilers, burners and their ancillary systems and equipment.

Autoflame's warranty from point of sale is two years on all electronic systems and components.
One year on all mechanical systems, components and sensors.

The warranty assumes that all equipment supplied will be used for the purpose that it was intended and in strict compliance with our technical recommendations. Autoflame's warranty and guarantee is limited strictly to product build quality, and design. Excluded absolutely are any claims arising from misapplication, incorrect installation and/or incorrect commissioning.

If in doubt regarding any technical aspect of the system contact your authorised dealer or the Autoflame Technical Sales Department. Either of the above will be pleased to give advice and Technical Information.

Section 1: Overview and Introduction of M.M. E.G.A. System

SCHEMATIC OF M.M. E.G.A. SYSTEM CAPABILITIES & INTER RELATIONSHIP OF SOFTWARE MODULES.

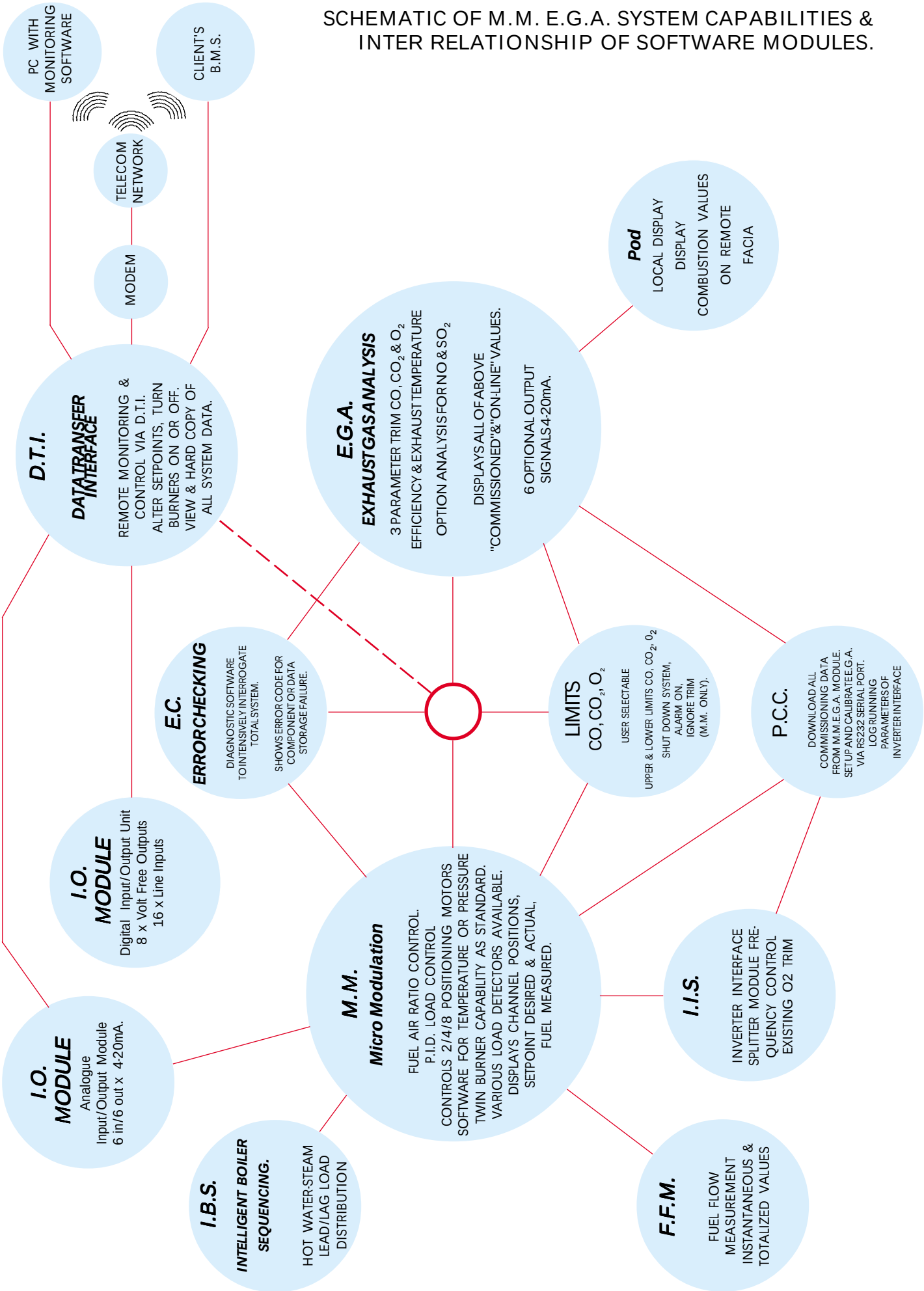

Overview - Features and Benefits of the Autoflame Micro Modulation and Exhaust Gas Analysis Trim Systems

M.M. Micro Modulation/Flame Safeguard

* Fuel/air ratio control
* Control up to 4 positioning motors for up to 4 fuel programs
* Fully adjustable P.I.D. load control for temperature and pressure
* External voltage load control
* Various boiler load detectors available
* Twin burner capability
* Fully compatible with control frequency drives
* Fuel Flow Metering software
* Full Flame Supervision with UV self check
* Gas valve train leak supervision
* Air windbox pressure proving

E.G.A. Exhaust Gas Analysis

* 3 parameter Trim of CO_2 - CO and O_2
* Displays CO_2, CO, O_2 Efficiency, Delta T and exhaust gas temperature.
* NO, SO_2 monitoring.
* System can be used as a stand alone analyser with display pod and 6 adjustable 4-20mA outputs to interface with other controls.

I.B.S. Intelligent Boiler Sequencing.

* System will Sequence hot water boilers and steam boilers via lead/lag load distribution.
* Fully adjustable via user option with the system to enable the control to be tailored to the application.
* System control for isolation of valves or pumps.

D.T.I. Data Transfer Interface

* System will collect operational data up to 10 M.M. modules on one site, transmit via RS232 data link to a local PC running WinPCDTI or Building Management System (B.M.S.).

* Modem compatibility software to give information and control of boiler house operation remotely.

I.I.F. Inverter Interface, Splitter

* Fully compatible with variable frequency controllers via 4-20mA or 0-10V.

* Interface with existing on-line O_2 analysers via 4-20mA or 0-10V.

* Split one E.G.A. signal for two M.M.s for use on common or twin furnace boilers.

P.C.C. Personal Computer Compatible

* Down load all commissioning data from M.M. E.G.A. module.

* Set up and calibrate E.G.A. via RS232 serial port.

* Log running parameters of Inverter Interface.

I/O.U. Digital & Analogue Input/Output Units.

* These units can be configured to give inputs and outputs for the DTI system. Additionally the Analogue unit can communicate directly with a Mini Mk5 MM.

SYSTEMS POSSIBILITIES

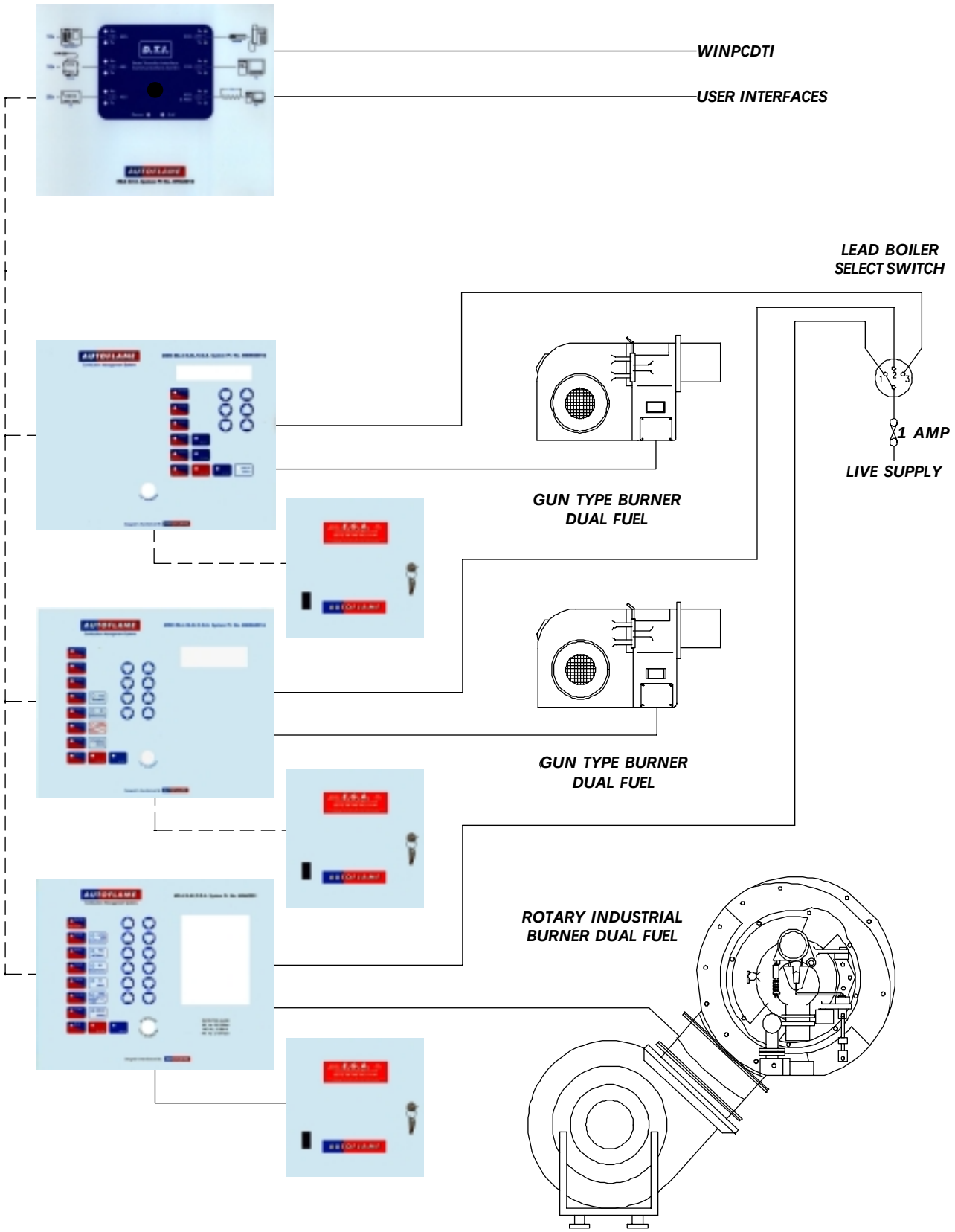

LAYOUT OF DUAL FUEL ROTARY CUP
BURNER CONTROLS & M.M. SYSTEM

KEY TO CONTROL SYSTEM

1 Control panel
2 Micro Modulation Unit
3 Pilot solenoid valves
4 Rotary cup motor
5 Flame detector
6 Pilot burner
7 Ignition electrodes
8 Atomising air proving switch
9 Fuel servo motor
10 Oil solenoid valves
11 Temperature/pressure sensor
12 Atomising air servo motor
13 Modulating oil valve
14 Modulating gas valve
15 Oil pressure regulator valve
16 Atomising air damper
17 Oil entry block
18 Oil return shut-off valve
19 Oil flow shut-off valve
20 Combustion air servo
21 Modulating combustion air damper
22 Combustion air proving switch
23 Combustion air fan
24 Burner terminal box
25 Oil temperature gauge
26 Oil pressure gauge
27 Oil temperature thermostat
28 Main gas shut-off valve
29 Gas filter
30 Gas flow meter
31 Main gas actuating valves
32 Valve proving system
33 Throttle valve
34 Oil flow meter

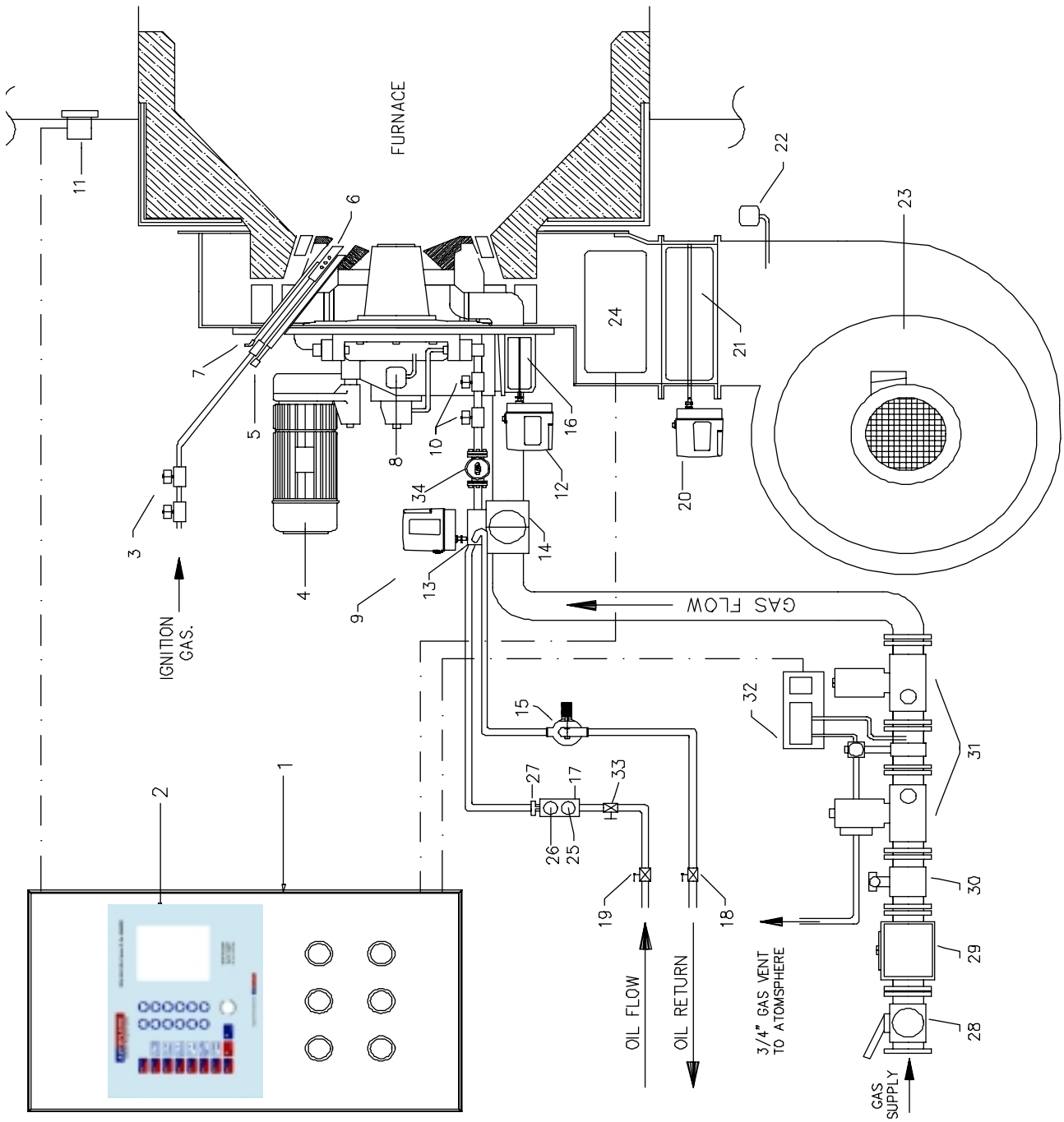

	Mk6	Mini Mk6	Mini Mk5
Micro Modulation Fuel/Air Ratio Control			
Servo channels	4	4	3
VSD channels	2	-	2*
Fuel profiles	4	4	3
Selectable trim channel (Damper or VSD)	✓	-	-
Error diagnostics displayed	✓	✓	✓
Single point change	✓	✓	✓
User defined optimum ignition	✓	✓	✓
FGR management	✓	✓	-
Exhaust Gas Analyser (requires EGA)			
CO2, O2, CO trim	✓	✓	✓
CO2, O2, CO, NO, SO2 displayed	✓	✓	✓
Exhaust temperature and combustion efficiency displayed	✓	✓	✓
User definable limits to CO2, O2, CO	✓	✓	✓
Burner Control			
User configurable timings	✓	✓	-
Internal flame safeguard controller for UV	✓	✓	-
Gas valve proving system	✓	-	-
Air wind-box pressure proving	✓	-	-
Gas pressure supervision	✓	-	-
Air pressure supervision	✓	-	-
Oil pressure supervision	✓	-	-
Lockout history	✓	✓	-
Setpoint Control			
Internal 3 term PID load control to required setpoint	✓	✓	✓
Software adjustable thermostat/pressure-stat	✓	✓	✓
Second setpoint selectable	✓	✓	✓
Outside temperature compensation	✓	-	-
Night setback facility	✓	-	-
Further Features			
IBS hot water	✓	✓	✓
IBS steam	✓	✓	✓
IBS low pressure steam	✓	✓	-
Fuel flow metering - instantaneous	✓	✓	✓
Fuel flow metering - totalised	✓	✓	-
Hand/Auto/Low flame hold	✓	✓	✓
Input for external load control	4-20mA/0-10V	4-20mA/0-10V	0-5V
Output of firing rate	4-20mA/0-10V	-	-
Twin burner capability	✓	✓	-
User Features			
Password protected configurable options and parameters	✓	✓	✓
Infrared communications port	✓	✓	✓
Systems data export via DTI	✓	✓	✓
Internal calendar clock display and logging	✓	✓	-
Proximity sensor screen saver	✓	-	-
LCD Display	1/4 VGA	20x4 line	20x2 line

* Inverter Interface required. Each IIF uses one servo channel.

Mk6 MM

Mini Mk6 MM

Mini Mk5 MM

MICRO MODULATION (M M)

Overview of System Operation: Features and Benefits

To ensure maximum efficiency in the operation of any boiler, two requirements are of paramount importance, the first being that the air to fuel ratio is kept to the minimum to ensure complete combustion within the limitations of the combustion head design and that these settings once arrived at are infinately repeatable to an incredibly high degree of accuracy. The second requirement should be that the target temperature or pressure of the boiler is monitored by the combustion system and that at all times exactly the right amount of fuel and air is fire to achieve the target value and that at no time irrespective of load change is this target exceeded or fallen short of.

The inherent hysterisis of all mechanical systems that have traditionally involved cams and linkages to characterise the fuel air ratio have made this sort of accuracy impossible. The accuracy of response of fuel input to the monitored target temperature/pressure of the boiler has meant that the target value set by the operator has at most times been exceeded or fallen short of.

The Micro Modulation system provides an easily programmable and flexible means of optimising combustion quality throughout the load requirement range of the boiler/burner unit whilst ensuring the temperature is accurate to within 1 deg C (2 deg. F.) and pressure to within 1.5 p.s.i. The maximum error in degrees angular rotation between the two servo motors at any position in the load range is 0.1 degrees.

At the heart of the system is the control module which contains the micro computer and power supply. The display panel features touch sensitive key pad entry data, readouts and status indicators, all protected beneath a tamper-proof transparent plastic cover. The M.M. system shows angular position of air damper motor and fuel valve. "Required" and "Actual" temperatures are displayed.

Interfaced with the control module by means of high speed solid state switching are up to three dual wound servo motors. One motor is responsible for positioning the air damper and the other operates a fuel valve by which it is possible to meter the input of gas, oil, or dual fuel.

The position of each servo motor is monitored by a voltage dividing system enabling digitalised position information to be encoded into the control modules memory. The relative positions of the air and fuel motors are constantly checked by the system at the rate of 50 times per second.

This new system of burner control achieves 'Locked On' near stoichiometric air fuel mixing throughout the fuel input range of the boiler while maintaining exact temperature or pressure target values. The load control incorporates user variable P.I.D. values.

Operating in conjunction with the above control specification is a full three term infinitely adjustable P.I.D. load control package. This ensures that the control of set point temperature is accurate to within 1 deg C (2 deg F.) and pressure to within 0.1 bar (1.5 P.S.I.) Software for temperature or pressure is a user variable option, also various ranges of temperature and pressure are selectable by the user.

The Micro Modulation (M.M.) module is the basic building block of the M.M./E.G.A. system. A complete system based on the Mk6 MM incorporates all of the following control facilities and features:

- 6 channel: 4 positioning motors and 2 Variable Speed Drive interfaces.
- 4 separate fuel profiles
- Full flame supervision control with UV self check - system meets self check criteria on all outputs.
- A lockout history of the last 16 incidents held in memory. Time, date, function re-set
- Single point change capability
- IBS steam sequencing with lead/lag
- IBS heating boiler sequencing - lead/lag - control of return line 2 port valve
- Gas valve train leak proving system
- Gas pressure monitoring and display
- High and Low gas pressure supervision
- Oil pressure high/low limits.
- Oil pressure monitoring & display
- User definable optimum ignition position selection
- User definable flue gas recirculation ignition position selection
- Variable Modulation speed (motor travel time user variable)
- Selectable trim channel
- Burner control selectable operation - first/second safety times
- Air wind box pressure proving - display & supervision
- Internal PID 3 term load control - temperature & pressure
- Outside temperature compensation of boiler set point, user adjustable with night seback facility
- Fuel flow metering - instantaneous and totalised readings - all fuels - user defined units of measurement
- Exhaust temperature and ambient temperature net and absolute readings displayed.
- 3 parameter trim - CO_2, O_2 & CO
- Combustion efficiency calculation - net or gross displayed
- NO and SO_2 monitoring & display
- User definable combustion limits on all CO_2, O_2 & CO values
- Second set point user selectable
- Internal calendar clock display and logging functions
- Software adjustable thermostat/pressure stat. facility
- Hand/Auto/Low flame hold facilities
- Password protection of all safety related options and parameters
- Infrared Coms port for upload and download of commissioned data and lockout history
- Twin burner control capability
- 4-20mA/0-10V input for external load control of firing rate
- 4-20mA/0-10V output confirming firing rate position
- Changeover of fuels without shutdown (Special PROM)
- Quarter VGA screen with dynamic display capabilities and IR proximity screen saver
- 110 or 230 volt standard operation
- Panel facing mounting

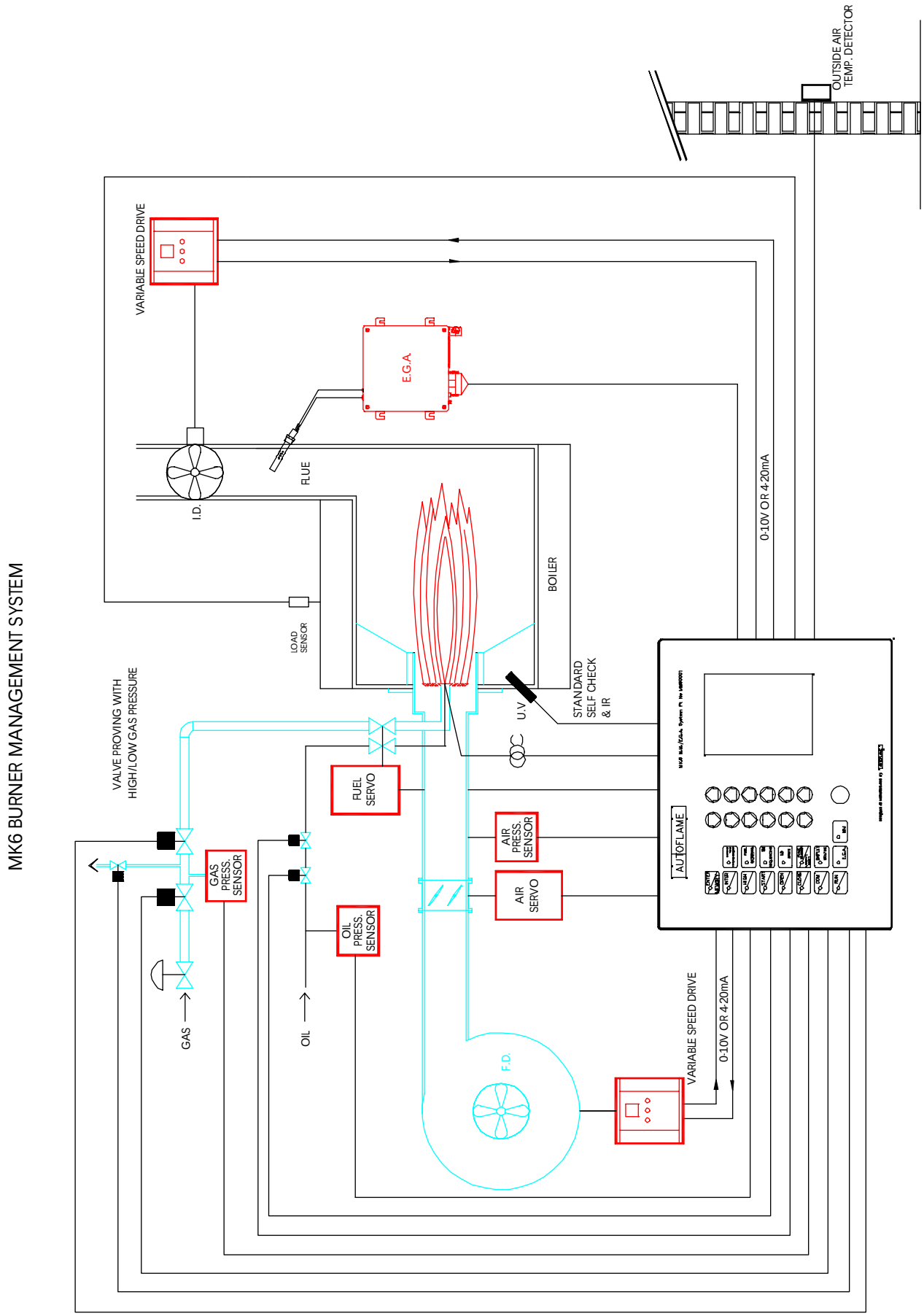
MK6 BURNER MANAGEMENT SYSTEM
VARIABLE SPEED DRIVE
E.G.A.
I.D.
FLUE
LOAD SENSOR
BOILER
0-10V OR 4-20mA
OUTSIDE AIR TEMP. DETECTOR
VALVE PROVING WITH HIGH/LOW GAS PRESSURE
U.V
STANDARD SELF CHECK & IR
FUEL SERVO
AIR PRESS. SENSOR
AIR SERVO
GAS PRESS. SENSOR
OIL PRESS. SENSOR
AUTOFLAME
GAS
OIL
F.D.
VARIABLE SPEED DRIVE
0-10V OR 4-20mA

EXHAUST GAS ANALYSIS (E.G.A.) TRIM SYSTEM

Overview of E.G.A. System Operation

With the E.G.A. trim system it is possible to expand the M.M. so that it will measure and display O_2, CO_2, CO and exhaust temperature, together with boiler efficiency: At the same time inflicting minute corrections on the air damper position to ensure that the originally entered commissioning data is adhered to, irrespective of variations in stack pressure or barometric conditions. As standard, outputs are available which can be connected with appropriate interfacing to an energy management computer to track and record the information that is generated by the E.G.A. system. To expand the M.M. system to the above E.G.A. specification the additional sampling unit and exhaust gas sampling probe must be purchased. The M.M./E.G.A. control form is P + I + D feed forward, and interpolates between all entered data, it also carries error checking self diagnostic software for self identification of system component or data handling failure.

The system trim function is achieved by every paired value for air and fuel having stored values for O_2, CO_2 and CO at the commissioned value. Deviations from these ideal values are held, this data is integrated and expressed as a degree angular value, so that an exact amount of air damper trim may be inflicted at any time to return the system to it's commissioned value at any load condition.

The E.G.A. can also be fitted with NO and SO_2 sensors for monitoring.

All the information available on the E.G.A. can be accessed by one or all three of the following methods:

1. Displayed on the M.M. facia.
2. 6 channel 4-20mA output facility for the above values.
3. Optional display pod on the front of the unit or mounted remotely on a flying lead.

Options 2 and 3 enable the E.G.A. to be used as a Stand Alone on-line continuous monitoring system.

E.G.A. setup and calibration is carried out via a PC using an RS232 serial port.

INTELLIGENT BOILER SEQUENCING (I.B.S)

Overview of I.B.S. System Operation

The Intelligent Boiler Sequencing software, which is included in every M.M./E.G.A. module, further extends the application possibilities of the system. The objective of this control form is to ensure that the minimum number of boiler/burner units are in operation at any one time to satisfy the heat requirement imposed upon the boiler plant, particularly in the case of multi boiler installations.

There are two variations of I.B.S. software that can be selected by the user via the Options procedure. The first variation relates to heating boilers and the second variation to steam boilers.

Heating Boilers Sequential Control:

A maximum of ten M.M./E.G.A. modules may be interconnected by a two wire screened data cable: (See interconnection drawing). Any string of modules interconnected as detailed can have one of it's number designated No. 1 or lead boiler. This identifying of "lead" boiler is achieved by either of the following methods:

a) Connecting a mains voltage onto terminal No. 41.
b) Instructing the modules via the D.T.I. module (Data Transfer Interface) by software.

Once a "lead" boiler has been selected the system works in the following way:

Typically every five minutes the sequencing software in the lead boiler identifies it's own firing rate by looking at the position of the fuel valve in the load index and also the maximum heating capacity of the No 1. "lead" boiler. This information would normally be entered when this boiler/burner unit is commissioned. Having established percentage firing rate, and maximum heating capacity, the I.B.S. software calculates the amount of heat being contributed to the system by this boiler. The I.B.S. software in the "lead" M.M./E.G.A. module then contacts in turn each of the modules connected to this loop and gathers similar information from each. The "lead" module's I.B.S. software then calculates the minimum number of boiler/burner units that need to be operational to satisfy the building load, imposed upon the plant at that time, and switches the remainder off.

There is a terminal connection on the M.M./E.G.A. module for controlling a two port valve that would normally be installed in the boiler's return pipe connection to the common return header. This facility ensures that boilers that are switched "off line" do not contribute return temperature water to the flow header thereby diluting the flow temperature to the building: (See relevant data sheets and drawings showing the control sequence detailed above).

Example:
There are four boilers interconnected as above, each with a heating capacity of 586kW(2MBtu.) In the event of each boiler firing 440 kW (1.5MBtu) (3/4 of it's maximum rate), the No. 1 lead boiler would instruct the No. 4 boiler to shut down and boilers No.s 1, 2 and 3 would adjust their firing rate to maximum.

In both cases the boilers are contributing 1758kW (6MBtu) to the system but, after intervention of the I.B.S. sequencing software, three boilers only are carrying the load which is a more fuel efficient method of operation.

If the building load continued to decrease the three boilers would reach a point where they were each firing 381kW (1.3MBtu) each. At this point the I.B.S. software would switch off the No. 3 boiler as two boilers would be capable of generating the 1172kW (4MBtu) required. When the load on the system increases, the reverse procedure applies, i.e. when, for example, two boilers are firing at near 100% load and the setpoint temperature on either of the modules is not being achieved, the I.B.S. software would switch on a third boiler to assist with the generation of the heat requirement. Any boiler can be nominated "lead" boiler by the connection of an input to the appropriate terminal or by a software instruction via the D.T.I.

Steam Boiler Sequential Control:

When the I.B.S. software control package is applied to steam boilers, it's operation is exactly the same as above but with the additional features and enhancements as explained in the following.

In the case of heating boilers only two states in the control form exist, either on or off. When steam boiler variation of I.B.S. is optioned there are three states which are controlled sequentially. The first is "on-line", this is when the boiler is operating purely under the control of the M.M./E.G.A. module's internal P.I.D. load controller.

The second state is "stand-by": In this case the boiler is operated at a reduced pressure setpoint, e.g. if the on-line boiler or boilers are set at a setpoint of 7 bar (100 p.s.i.) the stand-by boiler controls at a setpoint of 5 bar (72 p.s.i.). In this way if the load increases the stand-by boiler can begin to contribute steam quickly. The reduced setpoint is a user variable option in the same way as the normal control pressure setpoint.

The third state is "off-line", this is with the burner shut down and the boiler is cold. If the load on the boiler house increases, this boiler would move into a "Stand By" condition.

Apart from the variations detailed above, the steam sequencing works in precisely the same way as the heating boiler sequencing: The sequencing software package ensures that at all times the minimum number of boilers are operational to satisfy the load imposed on the boiler house.

REMOTE MONITORING AND CONTROL (D.T.I.)

Overview of Data Transfer Interface Operation

By means of our Data Transfer Interface (D.T.I.) module, all the operational data, stored within each of up to ten M.M. modules, can be collected by the D.T.I. for transmission by direct RS232 data link to a local terminal, screen and printer or Building Management System (B.M.S.). This facility can also be achieved remotely via modem/telecom link up. This cost effective system more than meets the requirements of today's E.M.S. and B.M.S. systems in providing all the necessary operational and alarm status and control of boiler plant to achieve its maximum energy efficient operation.

Up to a maximum of ten M.M. modules (one per burner) can be connected to one D.T.I. module by means of a series RS485 data link. The information gathered by the D.T.I. from each M.M. module is then available for transmission to the E.M.S. or B.M.S. via either an RS232 data link or modem/telecom data link.

Remote on/off control of the burners can also be achieved as well as adjustment of the temperature or pressure setpoints and selection of sequence lead boiler. To accommodate the status information from other plant related equipment, the D.T.I. can handle upto 160 direct mains voltage inputs, 80 volt free outputs, 60 4-20mA inputs and 60 4-20mA outputs. Typical remote E.M.S., B.M.S. information and operational facilities that can be achieved are as follows, but are subject to the particular site and management system requirements that are to be accommodated.

The capability exists within the standard D.T.I. software for the end user to label any mains voltage signal input as an "Alarm" condition. When labelled as an "Alarm" condition the system can 'autodial' out onto the general telephone network to a word pager and/or a remote office.

Possible Input/Output Values:

Values available from each MM :

Required boiler temperature (deg. C) or pressure (Bar).
Actual boiler temperature (deg. C) or pressure (Bar).
Burner on/off (CR relay on/off status).
Burner maximum firing rate.
Burner firing rate (%).
Fuel selected.
Boiler control detector type (temperature/pressure).
Error conditions.
Low flame hold operation.
Hand operation.
All MM channels (positioning motors and variable speed drives).

Values available from each MM : cont../...

Maximum set point accepted from DTI.
Minimum set point accepted from DTI.
Lead boiler status.
Burner firing status (off, firing, purge, ignition).
Sequencing optioned.
Sequence status (on, stand-by, warm, off).
Enabled/disabled status.

Additional information available if system has E.G.A.:

E.G.A. operation optioned.
Flue gas oxygen present value.
Flue gas carbon dioxide present value.
Flue gas carbon monoxide (unburnt combustibles) present value.
Flue gas exhaust temperature present value.
Combustion efficiency present value.
Flue gas oxygen commission value.
Flue gas carbon dioxide commission value.
Flue gas carbon monoxide (unburnt combustibles) commission value.
Flue gas exhaust temperature commission value.
Combustion efficiency commission value.
E.G.A. error conditions.

DTI control input values:

Change set point.
Select lead boiler.
Boiler enable/disable.

INVERTER INTERFACE MODULE

The I.I.F. module retains the same hardware but by a change of software can perform any one of the following 3 functions:

1. Inverter Interface (Mini Mk.5 only)

It is possible to control an inverter (variable frequency/speed drive) as if it were a servo motor, retaining all the T.U.V. Approved Error Checking software. The module is connected to the M.M. as a standard servo motor but the output signals can take the form of 4-20mA or 0-10V. The unit then expects to see a feedback signal as proof of condition in the form of 0-10V or 0-20mA.

Inverters are generally used for controlling the speed of the combustion air fan motor in conjunction with an air damper to achieve more precise control, a greater turndown and considerable electrical savings. Control over a recirculation motor is also possible.

2. O2 Interface.

Where an existing O_2 measuring device is fitted the interface module can receive a 0-10V or 0-20mA. signal for use by the M.M. for one parameter O_2 trim. Values for CO_2, CO, Exhaust Gas Temperature and Efficiency will be displayed as 0.

3. EGA Splitter.

On water tube or common furnace boilers it is possible to use one E.G.A. unit to sample the common flue gases and split the signal for use by two M.M. modules. Trim is inflicted on both burners based on the common products of combustion and will therefore not optimise the combustion performance of each burner.

1.10 P.C. COMPATIBILITY

M.M. Infrared Upload/Download

The Mk.6, Mini Mk.6 and Mini Mk.5 MMs each contain an Infra Red Upload/Download port which enables all the commissioning data from a single unit to be downloaded onto a PC using Autoflame IR lead and software. Data can be stored on disk. Stored backup data can be uploaded in to the MM. Information includes:

1. Site name, Engineer, Boiler Type, Data, Software No., M.M. identification number.
2. All fuel/air positions entered during commissioning.
3. E.G.A. values O_2%, CO_2%, COppm, NOppm, SO_2ppm, Ambient Temperature, Exhaust temperature, Delta T, Efficiency % for commissioned, and also autotrim values of O_2, CO_2 and CO at each position.
4. All Option number setting, default - * indicates options changed.
5. All Parameter numbers, setting, default - * indicates Parameters changed.
6. Flow Metering - if entered.

which can then be used to generate a hard copy Commissioning Report and be stored on disk for future reference.

E.G.A.

The E.G.A. is fitted with an RS232 serial port for connection to a P.C. All Set Up and Calibration tasks are carried out with the use of this link. Each cell is provided with its own unique calibration number which alleviates the need for costly on site calibration with test gas etc.

Inverter Interface

When connected to an Inverter Interface via a logic/232 link it is possible to list all the running parameters. This enables the operation of the Inverter to be monitored in relation to the M.M. Error Checking during commissioning and highlight any unacceptable conditions.

1.11 ANALOGUE INPUT/OUTPUT UNIT

This unit has 6 individually programmable outputs and 6 individually programmable inputs providing a means of converting items of data within the M.M./E.G.A. system in 4-20mA signals.

The unit can be supplied with outputs readily configured or with the use of the DTI lead and Windows Terminal mode software the outputs are user configurable.

The following functions are available for output data:-

Firing Rate	-	Percentage %
Actual	-	Temperature/Pressure, °C/°F or bar/psi.
Required	-	Temperature/Pressure, °C/°F or bar/psi.
NO	-	p.p.m.
CH1	-	Angular Degrees of travel.
CH2	-	Angular Degrees of travel.
CH3	-	Angular Degrees of travel.
CH4	-	Angular Degrees of travel.
% O_2 Flue	-	Percentage %
% CO_2 Flue	-	Percentage %
CO Flue	-	p.p.m.
Exhaust Temp.	-	Degrees °C
Efficiency	-	Percentage %
Fuel Flow Rate	-	Units/Min.
MM Error	-	4mA no error, 20mA error.
EGA Error	-	4mA no error, 20mA error.

Additionally, the A I/O can be connected directly to a Mini Mk5. In this case, the A I/O uses terminals 48 and 49 of the M.M. therefore neither Sequencing nor the D.T.I. may be used with the A I/O. Channel 1 input can be used as the Remote setpoint change.

Section 2: Mini Mk5 M.M. Micro Modulation

Section 2: Mini Mk5 M.M. Micro Modulation

2.1 MINI MK.5 M.M. CONTROL UNIT

2.2 COMMISSIONING AND SETTING UP PROCEDURES

2.2.1 Introduction

In the following text fuel and air positions are referred to. On the Mini Mk5 M.M. these are CH1 and CH2 respectively. CH1 is used for fuel control. If an E.G.A. is optioned CH2 must be used for the trim channel.

The commissioning procedure as described must be strictly adhered to. Anybody commissioning a Micro Modulation system must have an adequate understanding of combustion plant. In the wrong hands hazardous conditions could be made to exist.

The fundamental idea of the system is to set a fuel valve position and then set a corresponding air valve position. Care must be taken when adjusting the fuel and air positions so as not to create any unstable combustion conditions, e.g. moving the fuel valve to the open position without increasing the air valve correspondingly.

If the system being commissioned is an M.M., without E.G.A., then a combustion monitor is required to check the exhaust gases. If the system does have an E.G.A. then a combustion monitor should not be necessary as the E.G.A. performs all normal exhaust gas measurements. When burning oil a smoke detection device is necessary to check smoke generated is within limits.

Ideally to implement commissioning as quickly as possible arrange for a substantial load on the boiler. The commissioning procedure can be interrupted due to excess temperature or pressure, causing the burner to turn off. In these instances the commissioning data accumulated so far is not lost. When the burner is called back on the system starts up automatically and commissioning can proceed from where it left off.

Once the burner has been fired the maximum fuel position is entered first then descending fuel positions are entered consecutively until finally a minimum fuel position is entered. The CH1 and CH2 positions must always be less than the ones previously entered. However with CH3 it is possible to move the position above or below the previously entered point.

COMMISSIONING PROCEDURE (Systems without Exhaust Gas Analyser).

On a newly installed system the following procedures should be carried out as listed.

1. Check all interconnecting wiring between the M.M. and external components is correct.
2. Set options and parameters as required.
3. Set up positioning motors.
4. Programme fuel/air positions.

On a previously commissioned system, it is possible to omit steps No.s 1, 2 or 3.

Notes on Programming Fuel Air Positions

If during commissioning the burner turns off, due to the 'stat' circuit opening or a lockout, it is possible to carry on commissioning from the last entered position. This is possible as long as the HIGH position has been entered, and the fuel selected is not changed. When the 'stat' circuit is closed again, or lockout cleared, the system will purge automatically. Commissioning will then be resumed at Step 7. Automatically the system bypasses the HIGH position entry and resumes the commissioning procedure from the last entered INTER position . Effectively commissioning can now be carried on from Step 12.

If CLOSE remains flashing when pressed, this indicates that the 'stat' control circuit is probably not closed. Please refer to Fault Finding section.

If OPEN remains flashing when pressed, this indicates that the M.M. is not receiving a 'go to purge position' signal. Please refer to Fault Finding section.

During commissioning press M.M. to display the positioning motor values. Press STATUS to display the fuel selected and Actual value. (The Required value will also be displayed but cannot be adjusted during commissioning. During commissioning the CR1 relay stays closed all the time regardless of the Actual value).

2.2.2 Programming Fuel Air Positions (systems without EXHAUST GAS ANALYSER)

Ch1 & Ch2 refers to the top two rows of buttons respectively on the Mini Mk5 M.M.

Note: Throughout the commissioning procedure the COM l.e.d. is illuminated.

1. Ensure 'stat' control circuit is closed.

2. Select fuel. CLOSE flashes. PAS is displayed in Actual display window.

   Note: If fuel selected is being re-commissioned, press COM before COM l.e.d. stops flashing (five seconds).

3. Enter Access Code. Adjust the numbers in the CH1 and CH2 Position windows using the respective buttons.

   When numbers are set, press CLOSE (CLOSE l.e.d. steady, ENTER flashes. CH1 and CH2 position windows indicate angular position of positioning motors).

4. Use CH1 and CH2 to set positioning motors to 0.0. Press ENTER MEMORY (OPEN flashes).

5. Press OPEN (OPEN steady, ENTER MEMORY flashes).

6. Use CH1 and CH2 to set positioning motors to their fully open positions. This is nominally 90.0 for gas butterfly valves and burner air dampers.

   Press ENTER MEMORY (System purges, at end of purge START flashes).

7. Press START (START steady, ENTER MEMORY flashes).

   ****WARNING** Do not enter START position before reducing fuel input.**

8. Use CH1 and CH2 to set positioning motors to positions where ignition can take place.

9. Press ENTER MEMORY (Burner ignites, HIGH flashes).

10. Press HIGH (HIGH steady, ENTER MEMORY flashes).

11. Use CH1 and CH2 to set maximum firing input (do not exceed OPEN position values).

12. Press ENTER MEMORY (INTER, or INTER and START flash).

    Note: Only INTER flashes if the number of INTER positions entered so far is less or equal to three, thereafter INTER and START flash.

13. Press INTER or START (INTER or START steady, ENTER MEMORY flashes).

14. Use CH1 and CH2 to reduce the positions.

    If present position is an INTER position, go back to 12, otherwise proceed further.

15. Press ENTER MEMORY (After a short pause RUN flashes).

16. Press RUN to set system into normal modulating mode.

2.2.3 Setting Positioning Motors

Autoflame supply three standard sizes of positioning motors - large, small and industrial. All can be used for positioning fuel and air dampers.
Both types can be configured to drive clockwise or counter clockwise to open a valve or damper.

Refer to drawing numbers:	Layout of large positioning motor,	Section 2.2.3.4
	Layout of small positioning motor,	Section 2.2.3.3
	Industrial Positioning Motor, Refer	Section 8.10

Viewing the shaft end-on, from the potentiometer end, all positioning motors drive in a clockwise direction if power is applied between the LIVE and CW terminals, and counter clockwise if the power is applied between the LIVE and CCW terminal.

The operation of fuel valves and air dampers is often such that they open in a clockwise direction. If operation needs to be reversed, it is necessary to swop various wiring connections between the M.M. and the positioning motor(s). An example of reversing the operation of a fuel valve is shown in figure B, Section 2.9. Figure A shows the connections for normal operation.

Set Up Procedure:

Before a burner is fired it is essential to set up each Micro Modulation positioning motor.

A tamper proof screwdriver is required. (These can be ordered from Autoflame)

Usually control valves/air dampers, that the positioning motors drive, move through up to 90 degrees angular. The M.M. system has the ability to drive valves through up to 96 degrees. Please contact Autoflame technical department for advice on applications for ranges greater than 90 degrees.

All readings displayed on the MM are in degrees angular. It is necessary to adjust the potentiometer in the positioning motor assembly so that the M.M. reads 0.0 when the relevant valve/damper is at its closed position.

To set up a positioning motor, first ensure Option 12 is set to 0, (this prevents E.G.A. 'COOL' from being displayed). Put the M.M. into the commissioning mode so that the CLOSE l.e.d. is steady and the ENTER l.e.d. flashes (see section on Commissioning). By doing this it is possible to position the valve/damper mechanically by using the appropriate up and down buttons.

Remove the positioning motor cover.

Warning Electrical Connections are live.

For air positioning motor(s) carry out the following procedure:

Use the up/down buttons for the relevant air damper to position the air damper to its physically closed position. Loosen the three tamper proof screws just sufficiently to enable the potentiometer to rotate. Rotate the potentiometer clockwise or counter clockwise until the relevant display window reads 0.0. Tighten the three tamper proof screws gently until the pot. is secure. Do not overtighten the screws. Check display still reads 0.0, if not repeat adjustment process.

For fuel positioning motor(s) carry out the following procedure:

On Autoflame gas, oil and gas/oil combination valves it is necessary to remove the positioning motor. Manually position the oil/gas valve slot to its closed position. Observe the position of the drive pin on the positioning motor. Use the relevant up/down buttons to position the pin so that when the positioning motor is reassembled to the valve it is in line with the slot. Reassemble the positioning motor to the valve, loosen the three tamper proof screws and proceed to adjust the potentiometer position until 0.0 is displayed.

Small Positioning Motor

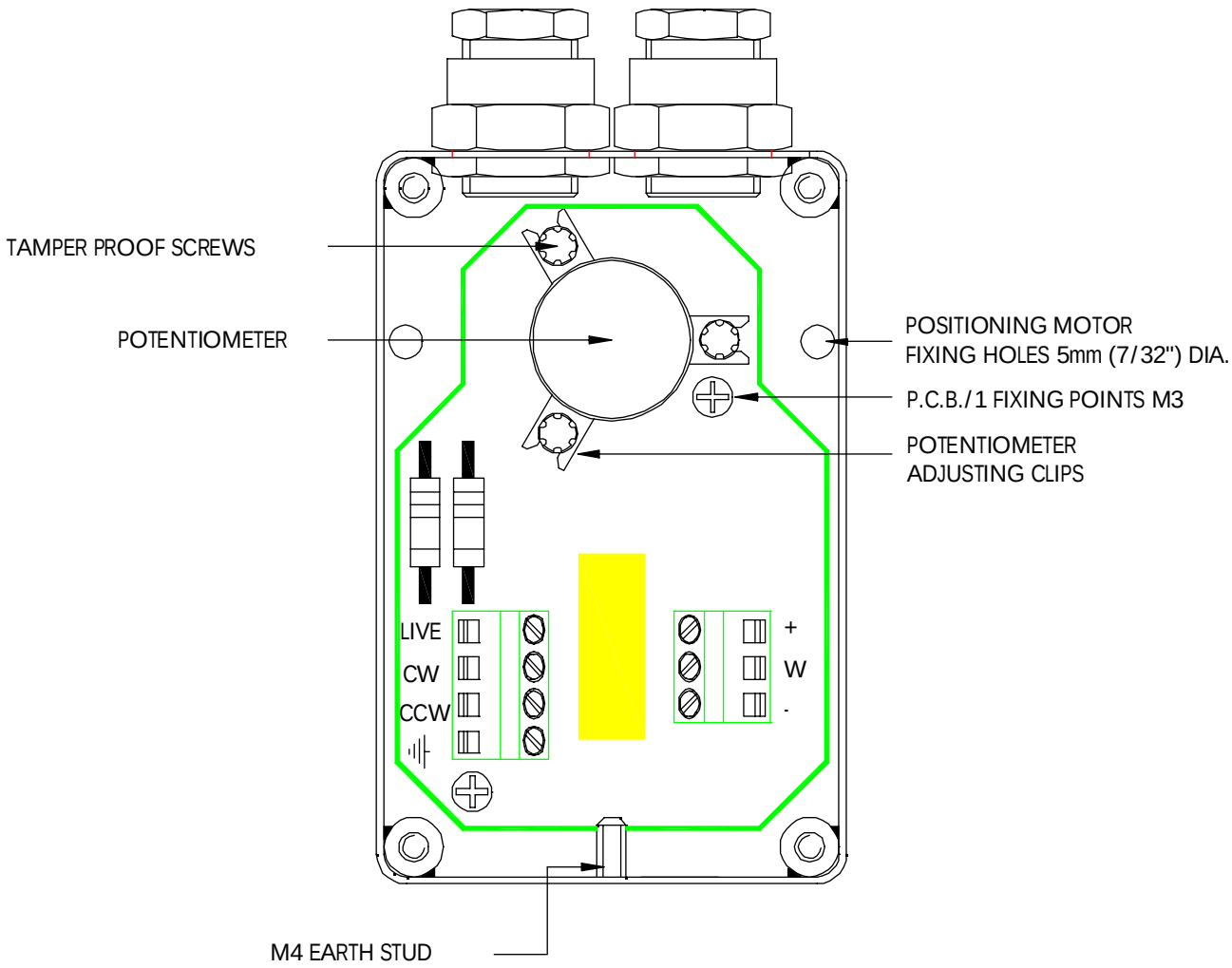

5:7:99/2653/TF

Large Positioning Motor

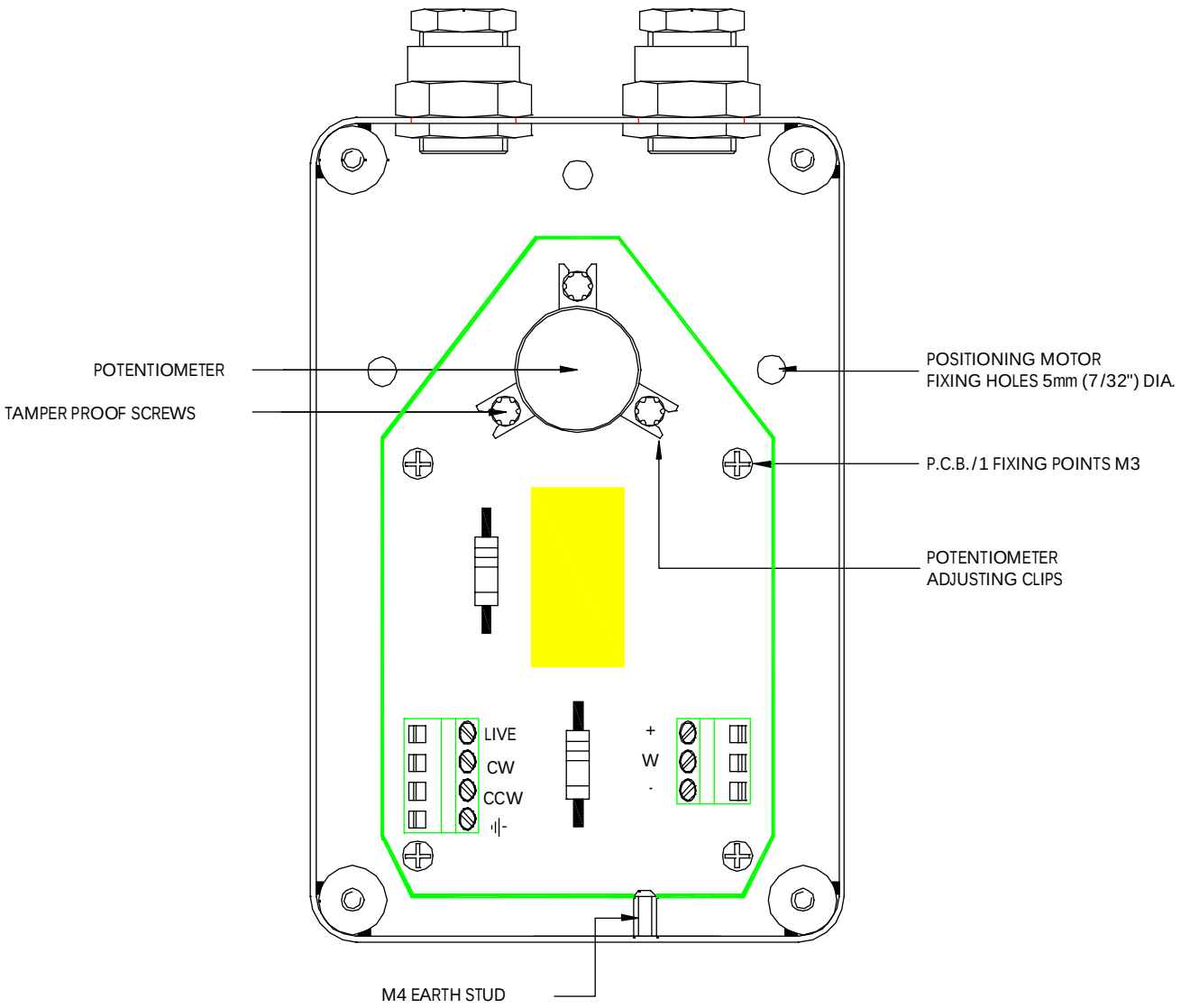

5:7:99/2652/TF

2.2.4 Options

To Select Option Mode
Ch1,2, & 3 refers to the rows of buttons starting from the top.

Option values can be changed by entering the Option mode. To enter the Option mode, the password must first be entered. To enter password follow the steps listed.

Select commissioning mode: Select fuel. If system is already commissioned, press COM before COM l.e.d. stops flashing.

If system is not already commissioned, commissioning mode will be set automatically. 'PASSWORD' is displayed.

Use the CH1 and CH2 to set the password codes. Press CLOSE button.

To select option setting mode once condition above is achieved, press CH1 simultaneously.

To change option number use the CH2

To change value use the CH3

Any number of option values can be changed when in option mode. When changes have been made press ENTER MEMORY All new option values are then permanently stored.

Option No.	Value Range	Factory Setting	
		Description:	
Boiler Temperature/Pressure Sensor Type:			
1.		3	Actual Adjustment Range
	3	0-400C Temperature Sensor (MM10006 & 7).	20-390 C. (50 - 730 F.)
	4	Unused	
	5	Unused	
	6	0-18 Bar Pressure Sensor (MM10008)	2.0 - 18.4 bar (30 - 267 P.S.I.)
	7	0-30 Bar Pressure Sensor (MM10009)	2.0 - 30.7 bar (30 - 445 P.S.I.)
	8	0-3.0 Bar Pressure Sensor (MM10010)	0.2 - 3.07 bar (1.5 - 44.5 P.S.I.)

Option No.	Value Range	Factory Setting Description:

Motor Travel Speed: The value is not specific to a time/distance ratio. If the speed of the motor is too fast then increase this option value. If too slow, decrease the value. This speed adjustment is only relevant during modulation. At other times the motors move at full speed - See Option 75.

2.		60
	5-240	Adjustment Range

Post Purge: If system is required to do post purge, set this option value to 1. The period of time that the air fan runs for is governed by the flame safety control. The M.M. will open the air damper to the HIGH or OPEN position, if this option is set. It opens the damper immediately after the stat control circuit opens. The M.M. keeps the damper open for the period of time specified in option 4. This period of time is completely unassociated with the flame safety control. The full period of time set in option 4 elapses before the M.M. will consider another burner start up.

3.		0
	0	System does not post purge.
	1	System does post purge.

Post purge time: (Only relevant if option 3 is set to 1).

4.		40
	10-250	Seconds.

Purge position: This selects the purge position: (Applicable to Channel 2/3 when selected, See Options 68 - 74). It applies to pre-purge and post purge if option 3 is set to 1.

5.		0
	0	Selected Channel purges at HIGH position.
	1	Selected Channel purges at OPEN position.

P & I control: Options 6 and 7 are used for adjusting the proportional and integral settings of the M.M.'s built in P + I + D controller. See Option 37 for the derivative adjustments.

Example of proportional band offset: Required value = 100 C, Proportional offset = 10 (i.e. Option 6 set to value 10).

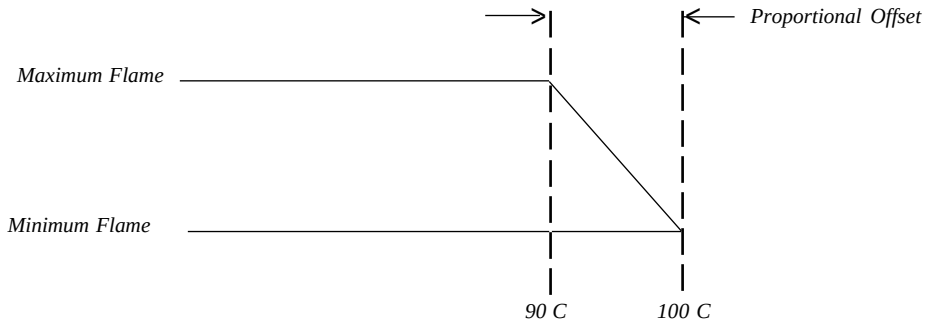

Proportional band: Value entered - Centigrade, Fahrenheit, Bar or p.s.i. depending on type of control sensor and display units selected (refer Options 1, 51 and 52).

6.		10
	5-50	For Centigrade, Fahrenheit and p.s.i. selections,
	0.5-5.0	If Bar is selected.

Integral time: Every n seconds 10% of the present proportional value is added or subtracted to the present proportional value. The value of n is set in this option. It is possible to set this Option to 'off'. If 'off' is selected there will be no integral action control.

7		60
	OFF-250	Seconds.

Number of Channels to be enabled: Channel "1" is always enabled (Fuel Position Motor). Set Option 8 to the number of additional channels required (Minimum of 1) .

8			1
	=	1	Channel 1-2 In use
	=	2	Channels 1-3 In use

CR Relay Operation: The 'CR' relay serves two purposes. To turn the burner off in the event of an M.M. system error and to effect a 'working' stat. There are three settings for this Option. The first keeps the 'CR' relay closed all the time. In this instance, a 'working' stat must be fitted to the boiler. The second setting opens the 'CR' relay at an offset above the Required value and closes it at an offset below the Required value. The third setting opens the 'CR' relay at an offset above the Required value and closes it at an offset also above the Required value. The 'CR' relay must always be fitted even if it is not used as a stat so that the burner will shut down in the event of an M.M. error. The following diagrams illustrate the 'CR' relay operation. The offset values are set in Options 10 and 11.

Option 9 = 1, example using 100 C. Required Value.

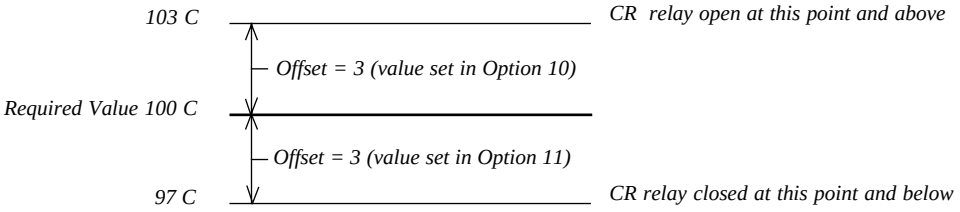

Option 9 = 2, example using 100 C. Required Value.

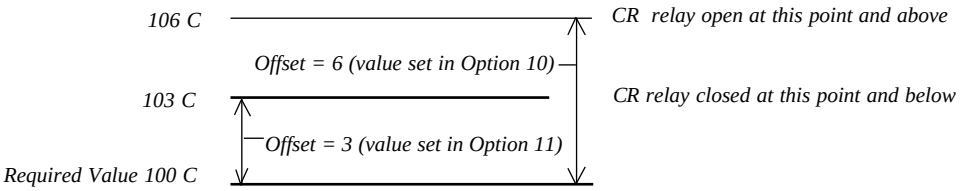

9.		1
	0	CR always closed.
	1	CR closes below Required value.
	2	CR closes above Required value.

Offset above desired value at which CR relay opens: (Only relevant if option 9.1 or 9.2 selected).

10.		3
	2-50	If Centigrade, Fahrenheit or p.s.i. units effective.
	0.2-5.0	If Bar units effective.

Offset below/above desired value at which CR relay closes: (Only relevant if option 9.1 or 9.2 selected).

11.		3
	2-50	If Centigrade, Fahrenheit or p.s.i. units effective,
	0.2-5.0	If Bar units effective.

E.G.A. Options: There are numerous E.G.A. Options, briefly they are as follows:- The E.G.A. is operational and the system trims. If the E.G.A. develops a fault, the system reverts to M.M. only operation. The system can be further optioned so that in the event of an E.G.A. error the 'CR' relay will open and stop the burner. If this type of option is set, the 'CR' relay will not close until the E.G.A. has cooled down to it's operating temperature. Further Options can be set which perform limit checks on the values that the E.G.A. measures. In the event of a limit being exceeded the system can revert to M.M. only operation, alternatively the 'CR' relay can be optioned to open. A last Option exists to enable an E.G.A. to give readings on the M.M. for just monitor purposes. i.e. the system is commissioned on M.M. only but E.G.A. values are displayed just for information. All Option values except 0 make the E.G.A. operational. If Options 5 or 6 are selected , refer to Options 19-27 to set limits to be tested for.

12.		0
	0	E.G.A. not optioned.
	1	System reverts to M.M. only operation if E.G.A. error.
	2	'CR' relay opens if E.G.A. error.
	3	Unused.
	4	Unused.
	5	Limits tested, system reverts to M.M. only operation if E.G.A. error or limit exceeded.
	6	Limits tested, 'CR' relay opens if E.G.A. error or limit exceeded.
	7	System commissioned on M.M. only, E.G.A. used as monitor.

Restore Factory Settings: To set all Options back to their original factory set values, set Option 13 value to 26 and press enter.

13.		0
	0-30	

14.	Unused.

15.	Unused.

Sequencing/D.T.I.: If Option 16 is set to values 1 or 3, then this M.M. will respond to sequencing commands (See section on Sequencing). A lead boiler can be selected by connecting 220V ac to terminal 41 of the appropriate M.M. Only 1 M.M. may be selected at a time or the sequencing will not operate. Alternatively the lead boiler can be selected via the D.T.I. For this to be effective all the M.M.s on the system must have Terminal 41 volt free.

16.		0
	1	Sequencing enabled.
	2	Setpoint & enable/disable commands accepted from D.T.I.
	3	Both of 1 & 2.
	4	Do not select.

NO & CO displayed when running on oil: If fuel 2 or fuel 3 are selected, then the displaying of CO & NO can be on or off. This Option is only relevant if an E.G.A. is operational on the system.

17. 0

0	NO & CO display always zero.
1	NO & CO is displayed normally.

Carry forward of Trim: When the system modulates, the correction that may be existing on the air damper position can be carried forward. Only air plus correction is carried forward. This Option is only relevant if an E.G.A. is operational on the system.

18. 1

0	No carry forward of trim.
1	Trim carried forward.

E.G.A. Limits: Options 19-27 are only relevant if an E.G.A. is operational on the system. Option 12 value 5 or 6 must be selected if any of the following limit checks are to be invoked. To enable the checking of a particular limit, make the value of the appropriate Option a non-zero value. The amount of 'limit offset' is specified by the value entered. e.g. If the 'upper limit offset O2' is to be enabled and the value of the offset is 2.0%, then enter the value of 2.0 for Option No. 19.

19. 0

0-10.0	Upper offset limit % O2.

---

20. 0

0-10.0	Upper offset limit % CO2.

---

21. 0

0-200	Upper offset limit CO (Multiply entered value by 10 to get offset value in ppm).

---

22. 0

0-10.0	Lower offset limit % O2

---

23 0

0-10.0	Lower offset limit % CO2

---

24. Unused.

---

25. 0

0-20.0	Absolute value % O2 (System checks for O2 values lower than value specified in this Option).

26. 0

0-20.0 Absolute value % CO_2 (System checks for CO_2 values higher than value specified in this Option).

---

27. 0

0-200 Absolute value ppm CO (Multiply value entered by 10 to get actual ppm value). System checks for CO readings higher than values specified in this Option.

Trim threshold: This option is only relevant if an E.G.A. is operational on the system. The value set in this Option is subtracted from the present "Required" value.
If the Actual value is less than the result then no Trim action will be effected. If the trim is to be effective all the time then set the value to zero.

28. 20

0-50 If Centigrade, Fahrenheit or p.s.i. units effective.
0-5.0 If Bar units effective.

Golden Start: Refer to Section 2.11
29. N.B. Must be entered on all fuels if more than one fuel is commissioned.

1
0 Golden Start operates.
1 Golden Start does not operate.

D.T.I. - Required Value: If the system is being used with a D.T.I. a maximum and minimum limit for the Required value must be set. The M.M. will only act on values within the limits set. If a value is received from the D.T.I., that is outside these limits, it will be ignored and the system uses its previous Required value. Practical range is limited to range of sensor selected.

Minimum Limit.
30. 50
5-995 If Centigrade, Fahrenheit or p.s.i. units effective.
0.5-99.5 If Bar units effective.

Maximum Limit.
31. 100

5-995 If Centigrade, Fahrenheit or p.s.i. units effective.
0.5-99.5 If Bar units effective.

Trim Delay: After ignition the sampling system does not sample for the period of time set in this option. (Only relevant if E.G.A. is operational on system).

32. 20
0-250 Period (seconds) after ignition no sampling takes place.

Sequencing Options: If this M.M. is configured as part of a sequencing system and/or required to communicate with a D.T.I. then the following three options must be set: The first is an identification number for this M.M. The second is the rating of the burner, and the third is the "sequencing scan time". Refer to Sequencing Section for further explanation.

33.		1
	1-10	Identification Number.

34.		5
	1-100	Rating of Burner kW x 100 (h.p x 100)

35.		10
	1-100	Sequence Scan time (Minutes).

E.G.A. Sensor Selection: Available when using an E.G.A. System fitted with NO/SO2 sensors. The following option is for selecting the type of Sensor required: Part No. EGA20005 for NO; EGA20006 for SO2.

36 0

	SO2	NO
0	Off	Off
1	Off	On
2	On	Off
3	On	On

Explanation of D. (Derivative Action): The user adjustable control variables to set up the D action are as detailed below.

37.		Time between readings 0 (0=off)
	0-200 Secs	The time interval between the controller comparing Actual and Desired Setpoint values.

38.		Deadband
	0-15	If Centigrade, Fahrenheit or PSI units optioned.
	0-1.5	If Bar units optioned.

The Deadband is the margin above and below the Setpoint within which no derivative control action occurs.

39. Response Sensitivity 10%

1-100% The Sensitivity Number indicates the amount of percentage firing rate increase or decrease that is inflicted by the Derivative action;

e.g. If the chosen value was 10% then 10% of the maximum firing rate would be added to the existing rate of fire; i.e.: If the burner were firing at 50% load and the derivative action was triggered the firing rate would increase by 10+50 to 60%.

The following is an example of the above control philosophy in action:

Note:	"Time Between Readings"	set to 20 seconds.
	"Deadband"	set to 2°C (2°F.)
	"Response Sensitivity"	set to 10%.
	Setpoint Information:	"Required" set to 90°C (190°F.)
		"Actual" reads 86°C (186°F.)
	Firing Rate Information:	Burner firing at 50% of capacity.

In the example situation there has been 4°C (4°F) drop in temperature below the "Required" value. The Deadband is set at 2°C (2°F.) therefore the Derivative action will be triggered as the deviation from Setpoint is in excess of 2°C (2°F.) In this example 10% will be added to the 50% firing rate resulting in an increase in firing rate to 60% of capacity. The "Time Between Readings" is set for 20 seconds and if after this time interval the "Actual" reading is not within the 2°C (2°F) deviation from "Required" Deadband another 10% would be added to the 60% firing rate which would result in a 70% firing rate. By careful selection of "Time Between Readings" "Deadband" and "Response Sensitivity" an ideal response to rate of change over time can be configured. The control philosophy detailed operates inversely if the "Actual" temperature exceeds the Setpoint and is outside the "Deadband". To enable or switch on the Derivative action the "Time Between Readings" must be set in excess of 10 seconds.

---

40. Unused

Steam Boiler Sequencing: Options 41, 42, 43 and 44 are related to the "Standby Warming" Sequencing state. Option 42 enables an offset to be set relative to the Required value to generate a "phantom setpoint". During this "Standby Warming" operation the CR1 relay operates on the phantom setpoint. Options 43 and 44 are offset values above and below the phantom setpoint (i.e Options 10 and 11 are not used for the phantom setpoint CR1 relay offsets). When a boiler is set to the "Standby Warming" state, by the M.M. Sequencing commands, it runs for a period of time at low flame and then off for a period. This action keeps the boiler warm. Option 53 sets the time interval that the burner is Off: Option 54 sets the time that the burner is On. If Option 41 = 0 and Option 53 is set to a non-zero value then only one boiler will be set to the "Standby Warming" state. Boilers further down the sequence will be set to the "OFF" state. In this case Options 53 and 54 set the ON and OFF time. (If Options 41 and 53 are 0 then Hot Water Sequencing is implemented).

41. 0

0	3 State Steam Sequencing.	ON, Standby - Warming - Off
1	2 State Steam Sequencing.	ON, Standby - Warming

42.		20	Offset below normal Required value.
	0-100	If Centigrade, Fahrenheit or p.s.i. units effective.	
	0-10.0	If Bar units effective.	

43.		5	Offset above phantom setpoint when CR1 opens.
	2-50	If Centigrade, Fahrenheit or p.s.i. units effective.	
	0.2-5.0	If Bar units effective.	

44.		5	Offset below phantom setpoint when CR1 closes.
	2-50	If Centigrade, Fahrenheit or p.s.i. units effective.	
	0.2-5.0	If Bar units effective.	

External Voltage Modulation: If this option is enabled, the usual P.I.D. control is disabled and the percentage of firing is set by an external voltage applied to the appropriate input. 0 volts sets the firing rate to minimum, 5.0 volts input sets the firing rate to maximum. The 10 point flow metering calibration must be entered for correct operation. See Option 57.

45.		0	External modulation.
	0	disabled	
	1	enabled	

46 - 50.		Unused

51.	When changing units adjust all other relevant options respectively.	
		0
	0	All temperature readings displayed in Celsius.
	1	All temperature readings displayed in Fahrenheit.

52.		0
	0	All pressure readings displayed in Bar.
	1	All pressure readings displayed in p.s.i.

Steam Boiler Sequencing: The steam boiler type sequencing is enabled by setting Option 53 to a non zero value. If the value is set to 0 (zero) then only heating type sequencing operates. Options 42, 43 and 44 are relevant to the "Standby" boiler operation.

53.		0
	0-200	Burner "Off" time (minutes) during warm up cycle. (Intelligent Boiler Sequencing. Steam boiler applications).

54.		5
	1-30	Burner "On" time (minutes) during warm up cycle. (Intelligent Boiler Sequencing. Steam boiler applications).

55.	Unused.

Operation of Output Terminal No 42.: Output 42 has a dual function. It can be used as an alarm output such that in the event of an M.M. error condition, the output will operate a relay. It's other function is to drive a relay which operates a shut off valve. This would be applicable when heating type sequencing is in operation.

56.		0
	0	Sequencing Use.
	1	Relay normally Off, On when Alarm.
	2	Relay normally On, Off when alarm.

Flow Metering: If the Air window shows 57 and the Required window shows 1 when ENTER is pressed to store the Options then the 10 point calibration procedure will be invoked the next time the burner starts. If the Air window shows 57 and the Required window shows 2 when ENTER is pressed the grand total value for the fuel presently selected will be reset to 0. The Mini Mk5 MM does not totalise Flow Metering.

57.		0
	0	No Flow Metering.
	1	Flow Metering Operates.
	2	Flow Metering Operates.

Associated with Flow Metering. Enter the number of seconds from ignition
(i.e. when the M.M. outputs S15) to the gas valve opening.

58.		15
	0-60	Seconds.

59.		Unused.

Hand/Auto Bumpless Transfer Operation.

60.		0
	0	Fuel valve goes directly to last set Hand position.
	1	Hand position (taken on present fuel valve position when changing from Auto to Hand operation).
	2	As 0, Hand position is not stored in permanent memory.

Inverter Interface: If an interface unit is used the following Options tell the M.M. which channels an interface is connected to.

61.		0
	0	Servo Positioning Motor in use for Channel 2.
	1	Inverter Interface in use for Channel 2.

62.		0
	0	Servo Positioning Motor in use for Channel 3.
	1	Inverter Interface in use for Channel 3.

63.		Unused.

64. 1		Flow metering units fuel 1 - Gaseous
	0	Cubic feet
	1	Cubic meters
	2	Kilograms
	3	Litres
	4	US gallons

65. 3		Flow metering units fuel 2 - Liquid
	0	Cubic feet
	1	Cubic meters
	2	Kilograms
	3	Litres
	4	US gallons

66. 3		Flow metering units fuel 3 - Liquid
	0	Cubic feet
	1	Cubic meters
	2	Kilograms
	3	Litres
	4	US gallons

67.		Unused

Purge: The following Options tell the M.M. which channels are to be included in the Purge Sequence. (See Option 5 for Purge Position).

68.		0
	0	Channel 2 to Purge position.
	1	Channel 2 to remain closed for Purge.

69.		0
	0	Channel 3 to Purge position.
	1	Channel 3 to remain closed for Purge.

70.		unused

71. 0		Fuel 1 - Fuel type.
	0	Natural gas
	1	Light Distillate Oil
	2	Heavy Fuel Oil
	3	Fuel 1

72. 1		Fuel 2 - Fuel type.
	0	Natural gas
	1	Light Distillate Oil
	2	Heavy Fuel Oil
	3	Fuel 2

73. 1		Fuel 3 - Fuel type.
	0	Natural gas
	1	Light Distillate Oil
	2	Heavy Fuel Oil
	3	Fuel 3

74. 0		Burner Rating Units.Display purposes only for Flow Metering.
	0	KW x 100 /hr
	1	Kg x 100 /hr
	2	MW /hr
	3	Btu x100 /hr
	4	Hp x100 /hr
	5	lbs x 100 /hr

Purge Motor Travel Speed: During a Purge Sequence the Motor Travel Speed can be set independent of Option 2. This affects all selected channels.

75.		0
	0-100	0 = Quickest time, 100 = Slowest time.

2.2.5 Setting Parameters

To Select Parameters Mode

Ch1,2, & 3 refers to the rows of buttons starting from the top.

Parameter values can be changed by entering the Parameters mode. To enter the Parameters mode, the password must first be entered. To enter password follow the steps listed.

Select commissioning mode: Select fuel. If system is already commissioned, press COM before COM l.e.d. stops flashing.

If system is not already commissioned, commissioning mode will be set automatically. 'PASSWORD' is displayed.

Use the CH1 and CH2 to set the password codes. Press CLOSE button.

To select parameter setting mode once condition above is achieved, press OPEN and CLOSE buttons simultaneously.

To change parameter number use the CH2

To change value use the CH3

Any number of parameter values can be changed when in parameters mode. When changes have been made press ENTER MEMORY All new parameters values are then permanently stored.

Number	Range	Preset	Description
1	0-20	3	Sequencing - Offset value when channel goes off line Default 3 minutes ie. If the Standby Boiler fails to start the scan time will be decreased by 3 minutes ie. if 10 minute scan reduced to 7 minute scan.
2	1-10	1	Sequencing - Time between data requests (seconds) Bus driver request info every second, M.M's transmit every second, DTI only listens to Transmissions.
3	1-10	1	Sequencing - Number of boilers initially set on

Number	Range	Preset	Description
4	5-100	45	E.G.A. -Seconds ENTER button disabled after E.G.A. pressed
5	1-50	4	Sequencing -Number of minutes ,time out value to reach modulation. ie. If Boiler is not Modulating after being asked to contribute to load, it is kicked out of sequence loop, after being asked to modulate, must modulate in 4 minutes.
6	5-100	60	MM - Test time for cr1 relay (seconds) ie. If S4 signal still present after 60 seconds from turning off then = ERROR 40
7	unused		
8	5-240	30	E.G.A. - Delay after draining before trim cycle start ie. Wash out period, When cells being cleaned with air, this value maintains the last readings until the air sampled during the drain period has gone.
9	5-240	60	E.G.A. - Auto commission time
10	unused		
11	5-60	25	Air flush time during Auto Commission - (Seconds).
12	0-1	0	E.G.A. - CO included in trim calculation on F2 & F3 (See Option 17). 0 - no 1 - yes i.e Required when running gas on F2 or F3
13	5-30	20	E.G.A. - DO NOT ADJUST
14	1-100	20	E.G.A. - DO NOT ADJUST
15	0-255	5	Number of seconds positioning motors are held at "choke" position.
16	1-50	12	Time between calibrations, = (÷ 2 = Hours) Calibrates every 6 hours if burner does not turn off.
17	0-10	3	E.G.A. - Number of trims before error flagged when limits exceeded. (each Trim = 30 Seconds)
18	5-30	20	E.G.A. - DO NOT ADJUST
19	unused		
20			Set value to 26 press enter to restore all preset factory settings.
	0-40	0	I.I.F. - Inverter Interface operation. 0 - 'Straight line' 1 - 'Points curve'

Number	Range	Preset	Description
21	0-1	0	E.G.A. - Present values display update rate. 0 - Each trim, 1 - Every second.
22	0-1	0	Sequencing/DTI - disables 'auto' bus driver 0 - Enabled 1 - Disabled
23	unused		
24	20-240	120	E.G.A. - Calibration time.
25	5-100	30	E.G.A. - Time between samples
26	1-20	8	E.G.A. - Number of samples per trim cycle
27	0-255	25	E.G.A. - Minimum Operating Temp. (÷ 5=deg C)
28	0-255	200	E.G.A. - Maximum Operating Temp. (÷ 5=deg C)
29	0-1	0	Select voltage input; Use 0 - Minimum to Maximum Use 1 - 0 to Maximum (Bottom limit is low flame hold in reality).
30	0-20	0	Filters Pressure Readings 0 - No Filtering. 20 - Max. Filtering.
31	0-1	0	Selects Efficiency to be displayed - 0 - English Selects Efficiency to be displayed - 1 - European
32	0-1	0	0- Standard Operation. No Flickering LEDs. 1- Flickering LEDs to show transmission activity. D.T.I.: CLOSE - TX, OPEN - RX E.G.A.: HIGH - TX, INTER - RX COM.: TX TWIN BURNER EGA:. RX TWIN BURNER Sequencing Status is displayed when viewing Fuel Meter Total. Used to assist IBS Setup.
33	unused		
34	0-1	0	Second Setpoint facility. 0 = Off, 1 = On.
35	unused		
36	unused		
37	unused		
38	0-255	254	MM - password fuel
39	0-255	1	MM - password air (To clear all commissioning data and restore options/parameters to factory settings, set 38=238 and 39=239, then press Enter.)

Number	Range	Preset	Description
40	unused		
41	unused		
42	unused		
43	unused		
44	0-4.0	0.4	E.G.A. - O2 window inside which no further trim takes place.
45	0-2.0	0.2	E.G.A. - CO2 window inside which no further trim takes place.
46	2-100	21	MM - Delay from ignition to modulation
47	unused		
48	unused		
49	0-1	0	0- EEPROM 1- Battery Backed RAM When 4-20mA I/O Board sets required value, stop damage to EEPROM by storing changed value in RAM.
50	unused		
51	unused		
52	unused		
53	unused		
54	unused		
55	unused		
56	unused		
57	0-1	1	Allocated to select transmission rate for DTI operation 0 - 4800 baud 1 - 9600 baud This parameter must be set to 0 when using DOS upload/download
58	0-1	1	1 - E.G.A. Calibration on Start up. 0 - E.G.A. No Calibration on Start up.
59	Unused		
60	0 - 1	0	0 - Normal EGA Operation 1 - O2 Trim Interface Operation.

2.3 ERROR CHECKING, FAULT ANALYSIS AND IDENTIFICATION CODES

Self Diagnostic Fault Identification Software.

The "Error Checking" software, which is included in every M.M. E.G.A. module, continually interrogates the system for component or data handling failure. This intensive self checking programme is inflicted on all peripherals such as positioning motors and load detectors as well as the main M.M. E.G.A. system hardware. The safety related areas, both hardware and software, have been examined and accepted by T.U.V.

In the case of M.M. related faults, "ERROR" will be displayed on the LCD along with the relevant error number.

In the case of E.G.A. related faults, "ERROR EGA" will be displayed on the LCD along with the relevant error number.

2.3.1 Key to Errors Detected in M.M. System

Fault Type	Code No.
Channel 1 (CH1) Positioning Error	01
Channel 2 (CH2) Positioning Error	02
Channel 3 (CH3) Positioning Error	08
Load Detector	03
Software (PASCAL) Error	04
PROM Memory Fault	05
Commission Data Fault	06
RAM Memory Fault	07
CR1 Test Failure	40
Channel 1 (CH1) Gain Error	41
Channel 2 (CH2) Gain Error	42
Channel 3 (CH3) Gain Error	43
5 Volt Supply Error	44
Watchdog - (CR2 Safety Test Failed)	45

Inverter Interface Error Codes:	CH2 =	62
Inverter Interface Error Codes:	CH3 =	63

In the event of any of the above conditions occurring and the M.M. module going into the error mode, the following shut down sequence will occur. A watchdog circuit will time out and the CR relays will open. This will break the boiler thermostat control circuit from the burner control box. The control box control will shut the combustion system down in the normal approved manner. The system must be powered down to reset an error.

2.3.2 Internal Fuses

If an LED is not illuminated, check adjacent fuse.

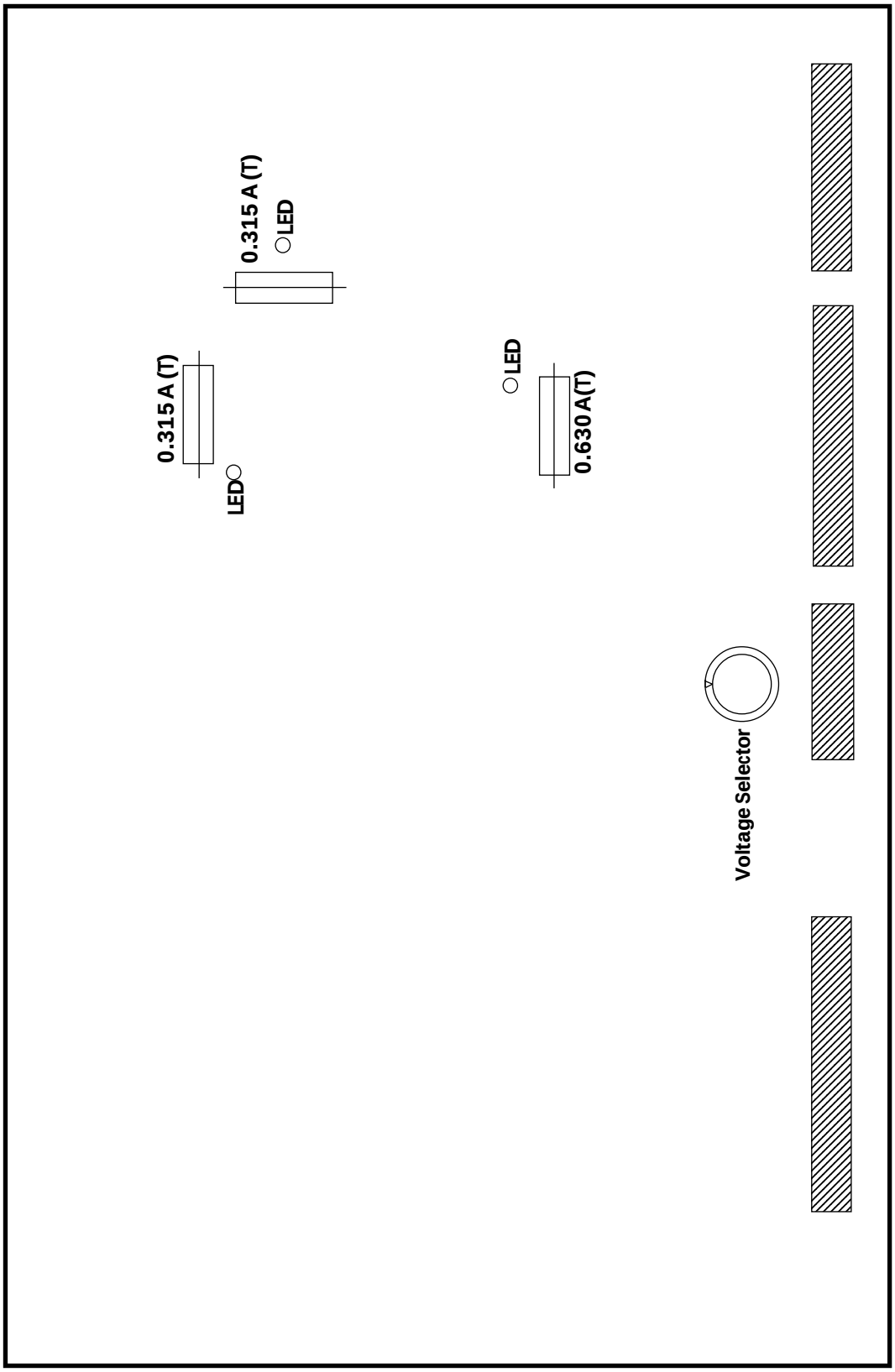

Fuses are "Time Lag" type, manufactured in accordance with IEC 127. Size 5x20mm.

2.4 END USER DAY TO DAY OPERATION

2.4.1 Normal Run Operation

Upon initial selection of a commissioned fuel, the display shows F1, F2 or F3 depending on which fuel is selected. The COM l.e.d. flashes for five seconds. During this time a number is displayed in the Actual window. This number indicates the number of times this fuel has been commissioned. After these 5 seconds the status values are displayed.

To adjust the Required value press STATUS and use the Bottom accordingly.

The range of the required value is limited according to the type of sensor being used (See Option section).

If the burner control circuit is closed the burner system will sequence through the burner start up procedure. The system purges and ignites, and twenty seconds (nominal) after ignition the system modulates. LCD will display values according to the selected display mode. There are four possible display modes: E.G.A. Commission values, E.G.A. Actual values, M.M. Positioning motor values and Status. To select one of the display modes just press:

COM E.G.A. M.M. or STATUS respectively.

The respective l.e.d. will remain illuminated to indicate which mode is selected. The COM and E.G.A. modes are only selectable if an E.G.A. is existent on the system. In the COM and E.G.A. modes there is a further choice of either Exhaust temperature /Efficiency/CO/NO/SO2. Select these by pressing

Exhaust Temp / OPEN, Eff% / CLOSE, CO / START, NO / HIGH, SO_2 / INTER accordingly.

In the event of the system being powered down, these selections will be memorised as is all commission data, Options and required value. During normal run operation the RUN led is on all the time. When no fuels are selected only the RUN l.e.d. remains illuminated.

If an E.G.A. is operative on the system it will calibrate every time the burner starts and stops. When COM or EGA display modes are selected CAL is displayed when the EGA is calibrating. If the E.G.A. is cooling, COOL is displayed. If the burner is not firing, EGA is displayed. When the burner is firing both modes show E.G.A.. if the Actual value has not reached the value at which trimming is permitted. (See Option 28.) If an E.G.A. error has occurred the error code number is displayed if either of EGA or COM modes are selected.

The software version number and issue can be displayed on the M.M. by pressing the Top CH1 simultaneously, when in MM display mode.

A facility exists to adjust small errors in the pressure value displayed in the Actual window.

To increase the value press RUN And Bottom/Ch3 simultaneously.

To decrease press RUN and Bottom /CH3 The facility does not work on temperature.

2.4.2 EPROM Version Numbers

To display the software version number select the MM Display screen, then press Channel 1 Up and Down simultaneously.

```
SOFTWARE
 630  00   15   02
```

Mini Mk.5 M.M. Schematic Connection Diagram (230V)

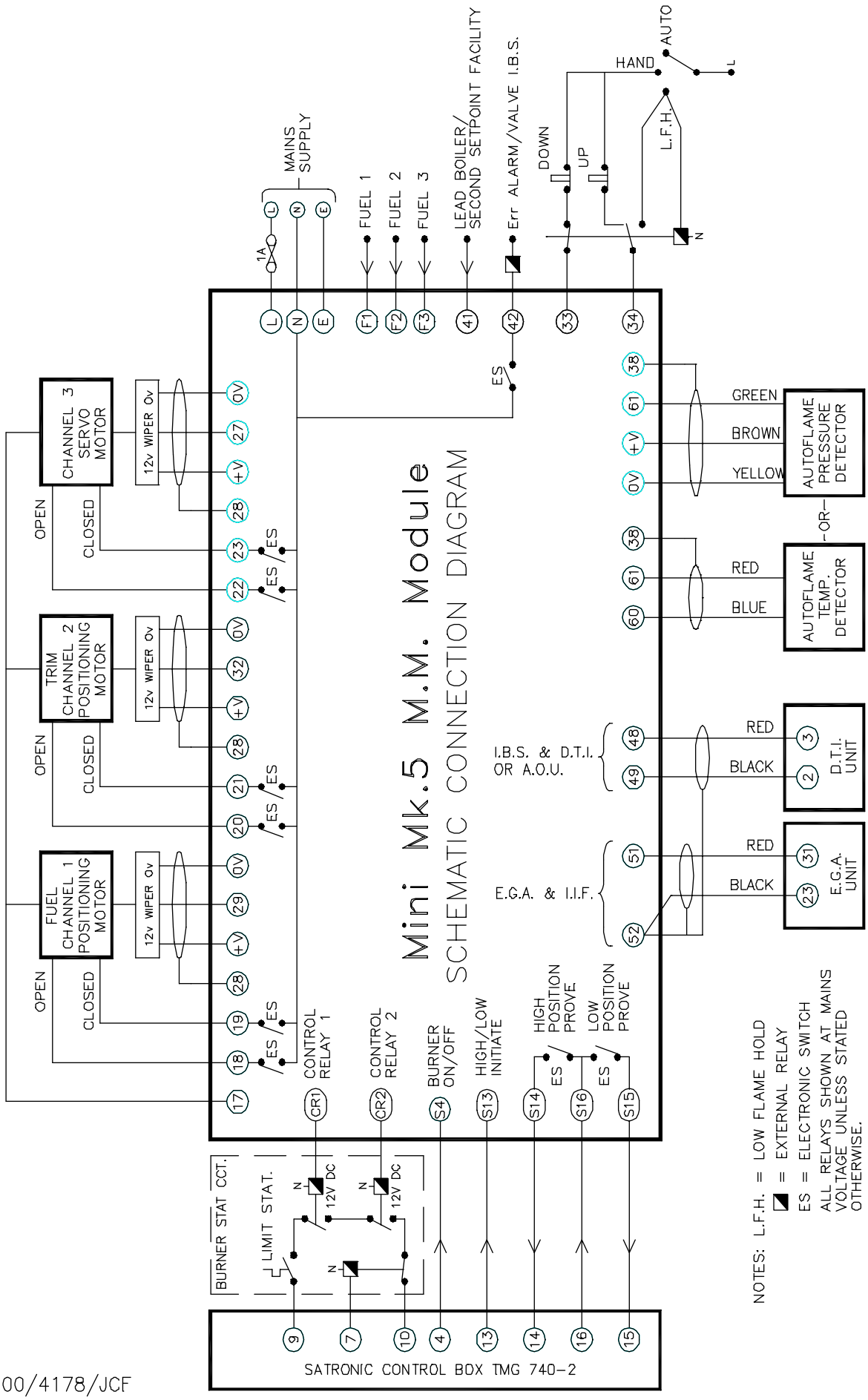

Mini Mk.5 M.M. Schematic Connection Diagram (120V)

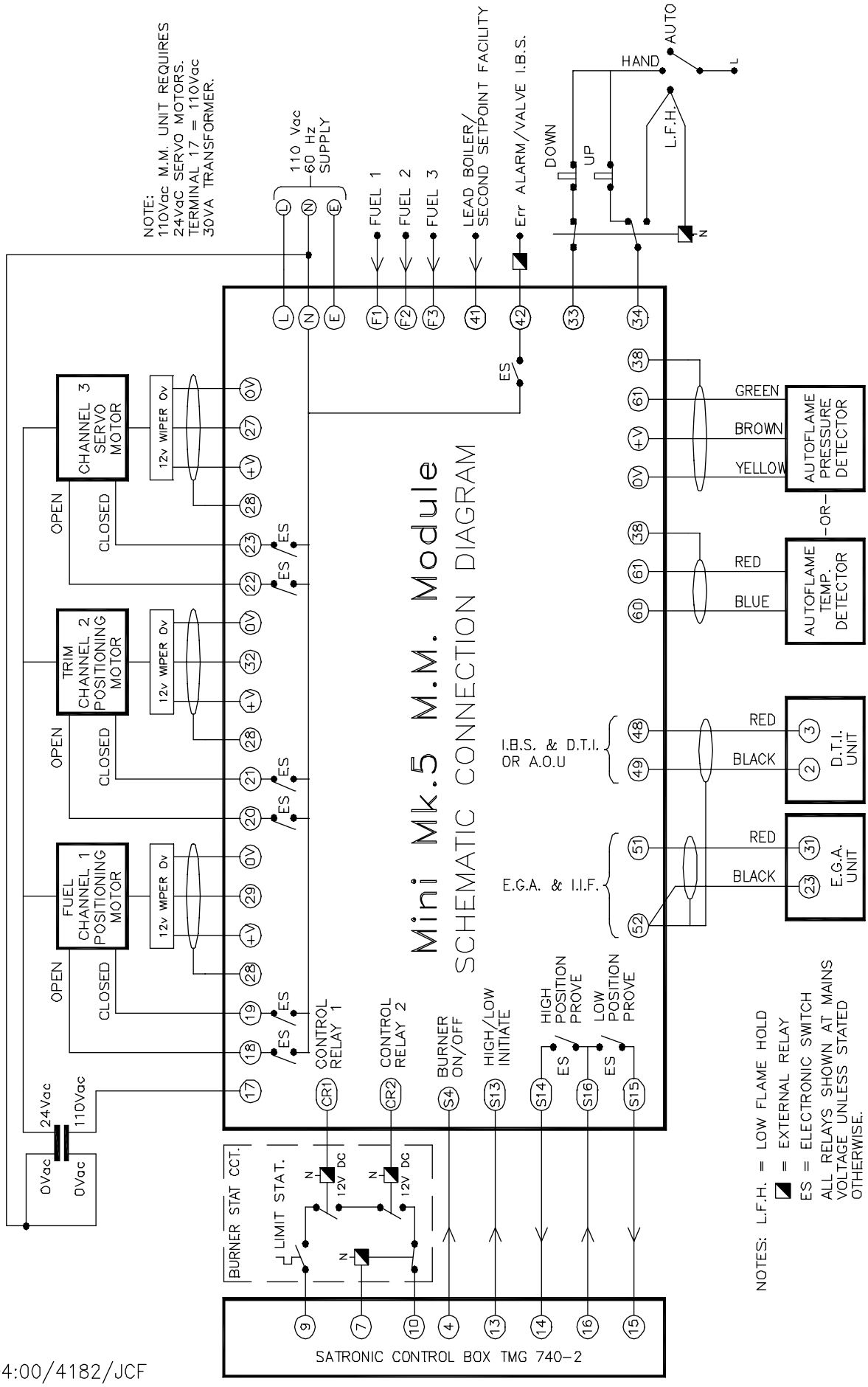

Mini Mk.5 MM Wiring Connection Temrinals Diagram

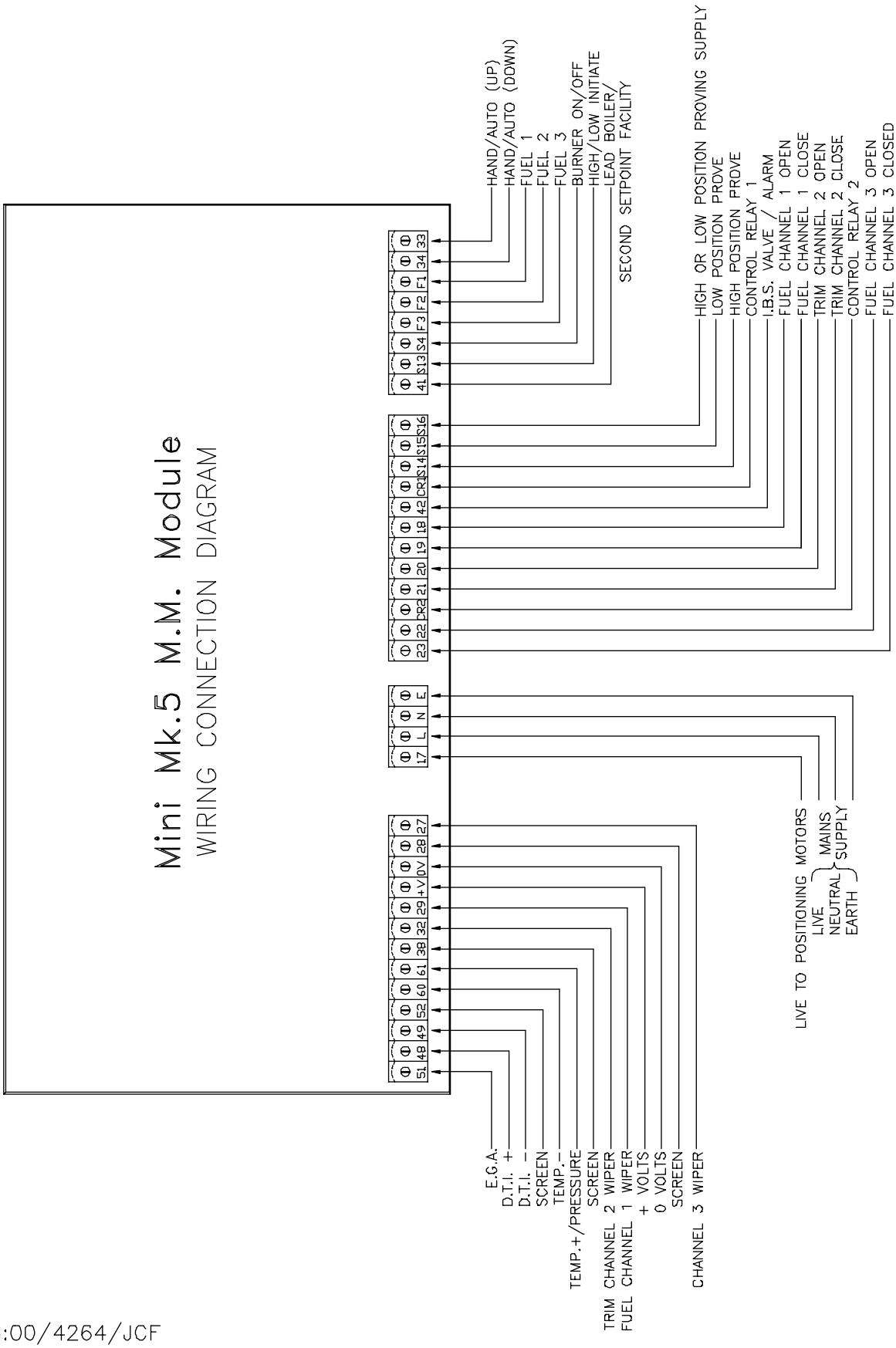

Autoflame Boiler Steam Pressure Sensor - Part No. MM10008/9/10

Connections		
Sensor	**Mk6/MiniMk6**	**MiniMk5**
Green	38	61
Yellow	37	OV
Brown	39	+V
White	unused	
Screen	S	38

FOR CORRECT OPERATION THE DETECTOR MUST BE INSTALLED WITH A PRESSURE SIPHON LOOP. DO NOT INSTALL ISOLATION VALVE BETWEEN DETECTOR AND PRESSURE VESSEL

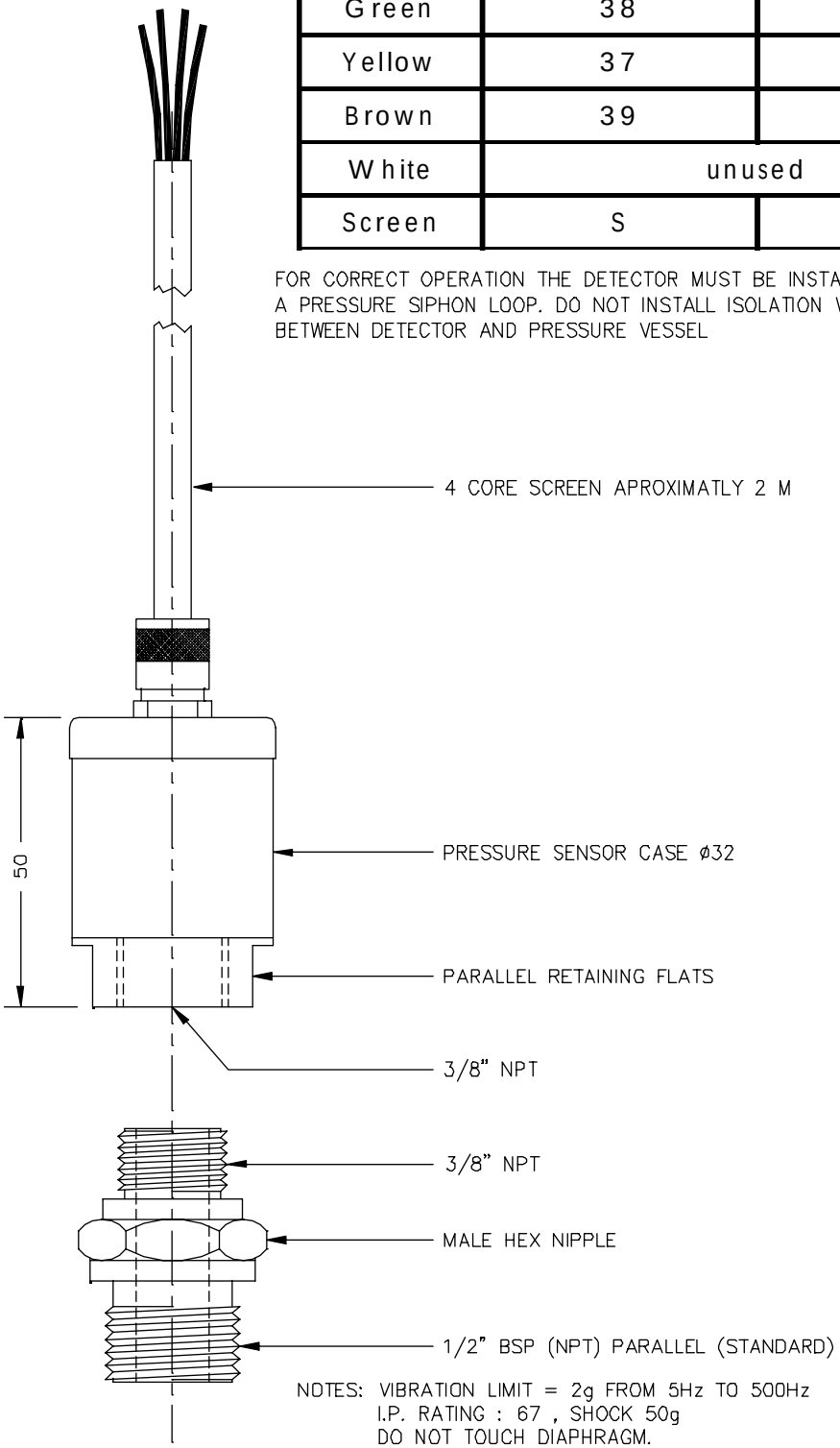

NB: Any physical damage to the stainless steel diaphram may result in sensor failure. The maximum depth that a male fitting can be screwed into the sensor is 10mm.

NOTES: VIBRATION LIMIT = 2g FROM 5Hz TO 500Hz
I.P. RATING : 67 , SHOCK 50g
DO NOT TOUCH DIAPHRAGM.
DO NOT USE CASE TO TIGHTEN PRESSURE CONNECTION.
CABLE TYPE: 3-CORE SCREENED, 7/0.2 PVC INSULATED OVERALL BRAID, PVC SHEATHED.
MAX. STORAGE TEMP. -55 TO +100 DEG. C
MAX. OPERATING TEMP. -40 TO +100 DEG. C
MEDIA TEMP (STEAM) -40 TO 125 DEG. C

20:7:99/3294/TF

Application of Control Boxes With Mini Mk.5 M.M.

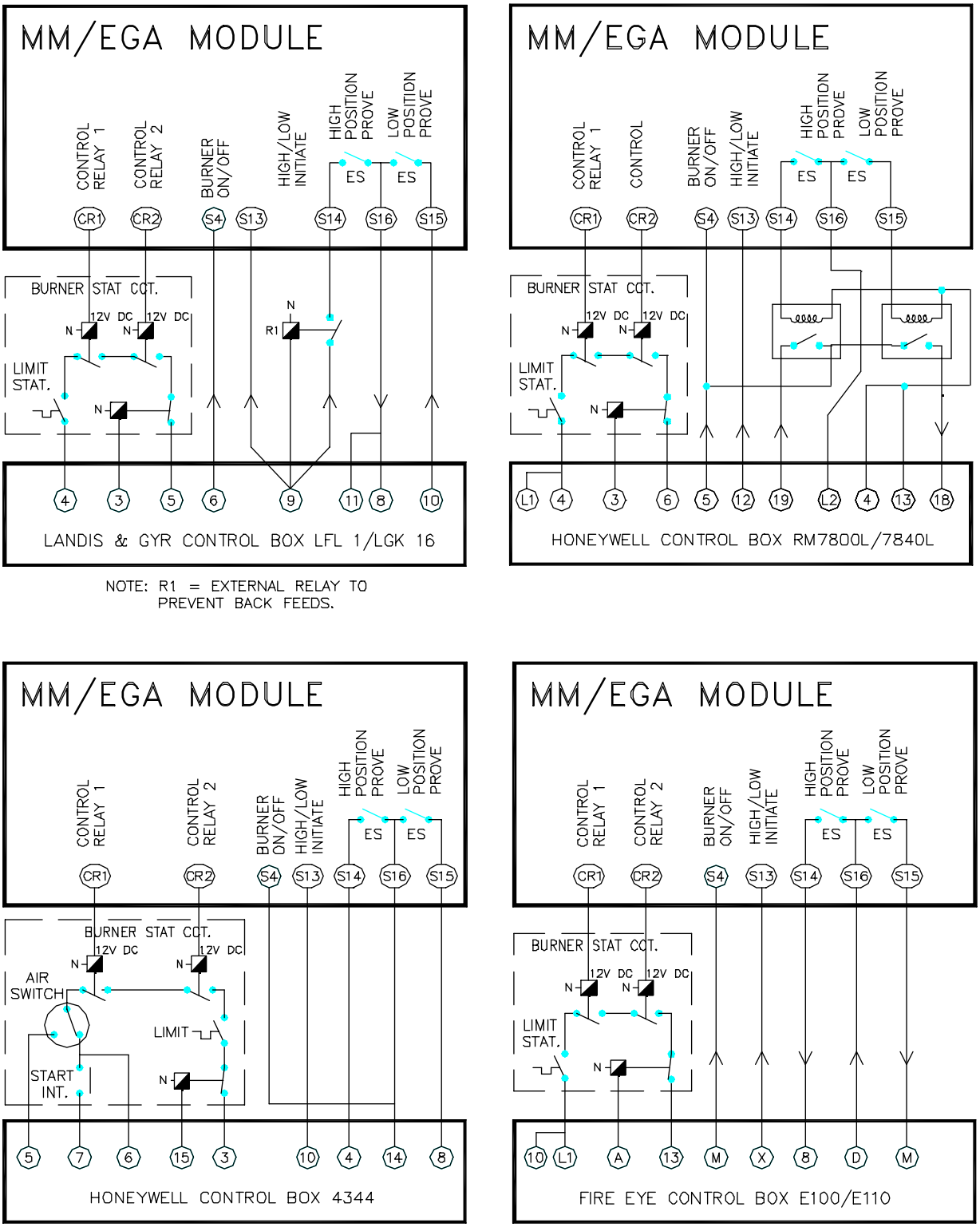

THE ABOVE ARE THE RECOMMENDED INTERFACE CONNECTIONS. PLEASE REFER TO AUTOFLAME ENGINEERING IF ANY DEVIATIONS FROM THESE ARE REQUIRED.

GENERAL NOTES:

◪ = EXTERNAL RELAY
ES = ELECTRONIC SWITCH

ALL RELAYS SHOWN AT MAINS VOLTAGE UNLESS STATED OTHERWISE.

17:11:00/1620/T.F.

Application of Control Boxes With Mini Mk.5 M.M.

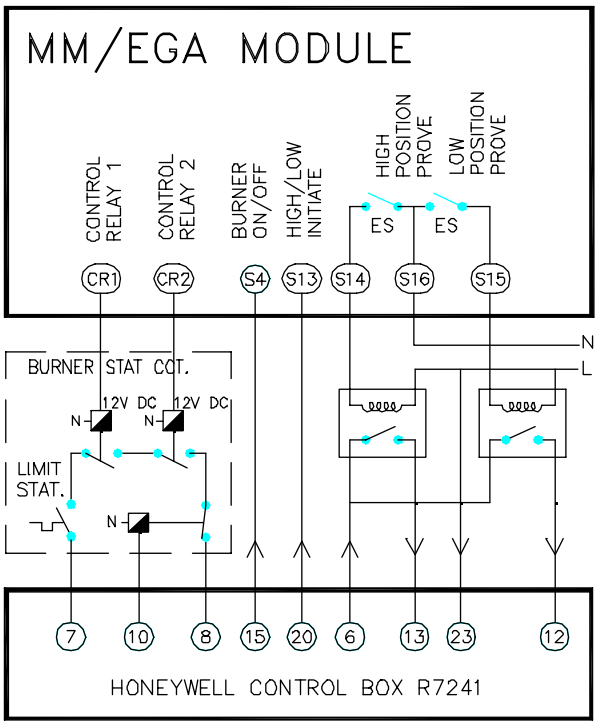

NOTE: COIL CURRENT 30mA MAX.

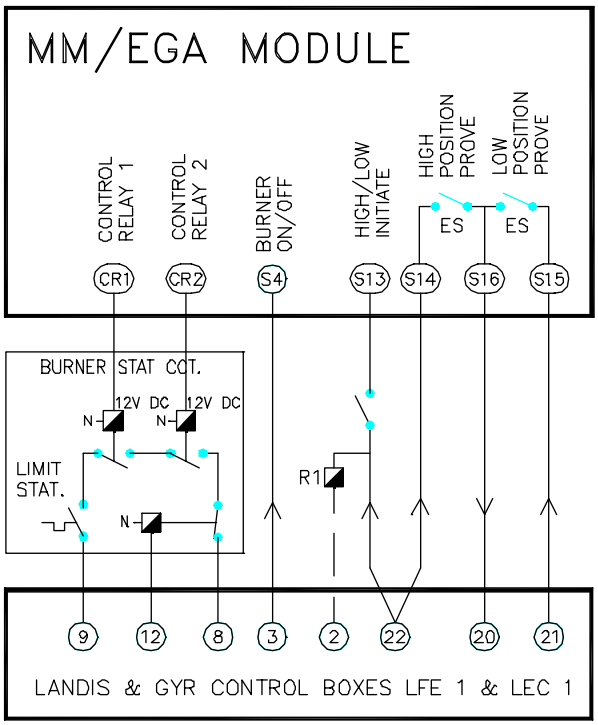

NOTE: R1 = EXTERNAL RELAY TO PREVENT BACK FEEDS.

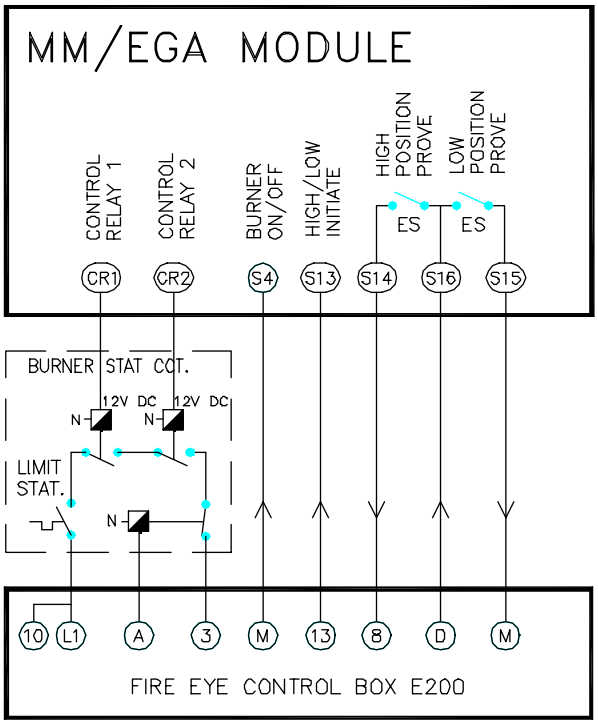

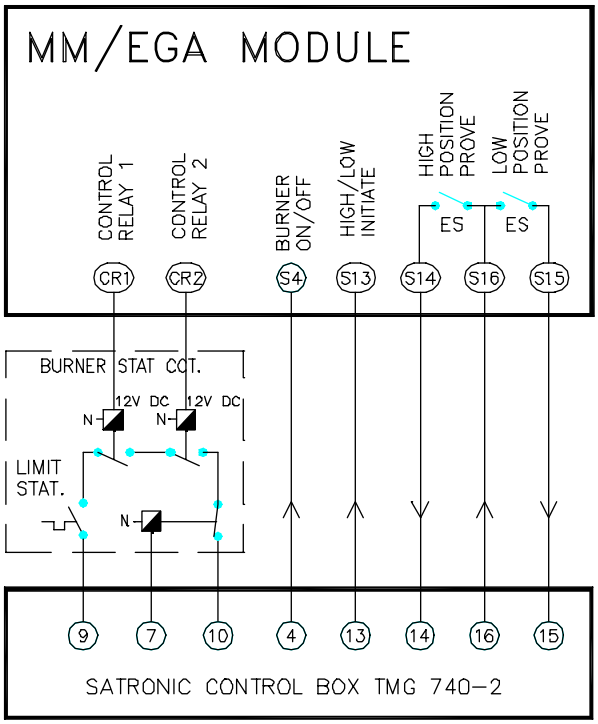

THE ABOVE ARE THE RECOMMENDED INTERFACE CONNECTIONS. PLEASE REFER TO AUTOFLAME ENGINEERING IF ANY DEVIATIONS FROM THESE ARE REQUIRED.

GENERAL NOTES:

◪ = EXTERNAL RELAY
ES = ELECTRONIC SWITCH

ALL RELAYS SHOWN AT MAINS VOLTAGE UNLESS STATED OTHERWISE.

5:7:99/1601/TF

Mini Mk.5 M.M. Schematic Connection Diagram (with External Voltage)

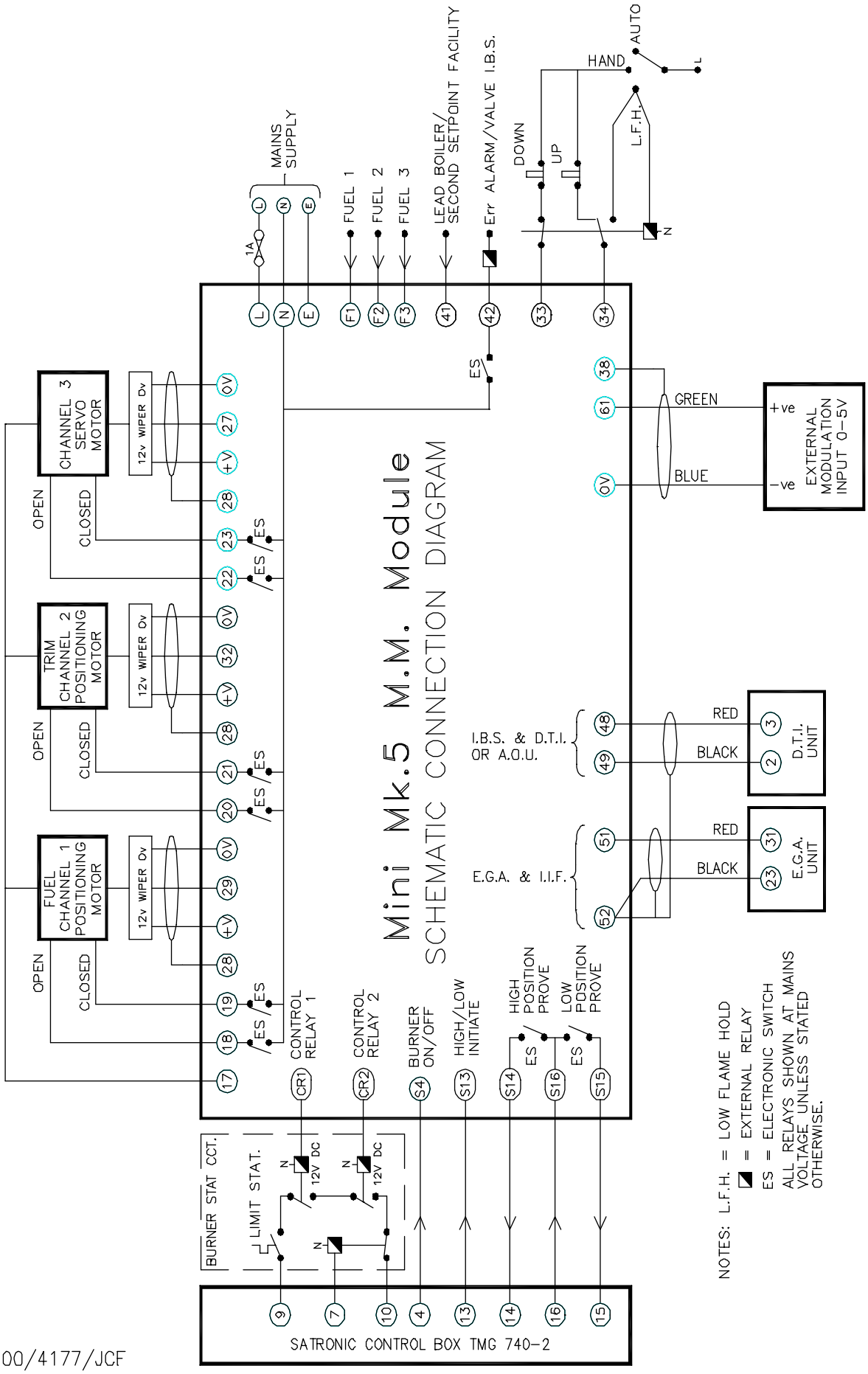

2.7 LOW FLAME HOLD AND HAND OPERATION

'Low Flame Hold' and 'Hand' operation are only effective when the burner is firing. They have no effect when the burner is off or during the burner start up cycle. They are effected by applying mains voltage signals to terminals 33 and 34 on the MM unit. When inputs 33 and 34 have no mains signals applied the system modulates according to the PID control.

LFH is brought into operation if 34 has a signal applied when the ignition part of the burner start up cycle takes place. 33 must not have a signal applied at this time or 'Hand' operation will come into effect. The minimum flame position will be maintained from now on, until the signal from 34 is removed or a signal is applied to 33 also. The only way to establish LFH again is to restart the burner. During LFH the PID control is obviously ignored.

'Hand' operation enables the fuel valve position to be set to a specific position, in the range of minimum to maximum flame. Once a position has been set it is recorded in the MM units memory. Each time the burner starts the fuel valve will be positioned to the 'hand' position set previously, even if the MM unit has been powered down. The MM system sets the fuel valve to the hand position whenever there is a mains signal on both 33 and 34. During ignition LFH will not be selected in this situation or if a signal exists on 33 only. Once the burner is firing the 'hand' position can be adjusted. To increase the 'hand' position the signal on 34 is removed and the signal on 33 maintained. To decrease the 'hand' position the signal on 33 is removed and the signal on 34 maintained. If the signals are removed from both 33 and 34 then the system reverts to modulation according to the PID control.

2 .8 FAULT FINDING

2.8.1 M.M. System and Positioning Motors

WARNING ! ! ! !
MAINS AND HIGHER VOLTAGES EXIST ON THE MM AND POSITIONING MOTORS.
THE SYSTEM CONTROLS A COMBUSTION PROCESS.

Only competent personnel aware of the implications of the above warning should attempt fault finding. Personnel must be responsible for the conditions under which fault finding takes place. (e.g.. isolation of fuel supply)

Please Note: Personnel not familiar with the system should carry out tests in the order written.

The method of fault finding described is for a system that has been working correctly and has gone wrong. It is not for trouble shooting new systems which may for e.g.. have incorrect wiring. It also will not turn up faults which are a result of tampering.

Before commencing any fault finding:-

Set Option 12 to 0
Set option 9 to value 0 (NOTE - only limit stat effective) or ensure actual value is less that required value sufficiently to energise cr relay.

The CR relay must be energised for the stat circuit to be made.

1 PRELIMINARY CHECKS

Remove cover of M.M. & check that all three LED's on the lower circuit board are illuminated, if all three are off check the mains supply to the unit on the 4 way connector, if an LED is not illuminated, check its respective fuse.

If unit is still blank it is likely there is a fault on the M.M.

Ensure there is no lockout condition.

Deselect fuel
Select fuel

Press COM before COM l.e.d. stops flashing (5 seconds)

Check stat circuit is made.

2 S4,S13 INPUT CHECKS

2.1 Press 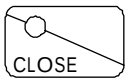

Is CLOSE steady or flashing?

Steady - S4 input ok
Flashing - check S4 terminal on MM
Is mains voltage present?

no - fault outside of MM
yes - fault on MM or plug-in connector

Position fuel and air dampers somewhere between 0.0 to 5.0,(if at this stage the dampers do not respond correctly to the up/down pushbuttons go to section: positioning motor checks)

Press 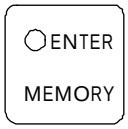

- OPEN flashes:

2.2 Press 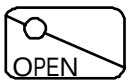

Is OPEN steady or flashing?

steady - S13 input ok
flashing - Check S13 terminal on MM
Is mains voltage present?

no - fault outside of MM
yes - fault on MM or plug-in connector

3 PURGE AND IGNITION INTERLOCK CHECKS

The MM controls purge using terminals S16 and S14.
The MM controls ignition using terminals S16 and S15.
Depending on the type of burner control box being used-
S16 is the input, S14 and S15 are the outputs
S16 is the output, S14 and S15 are the inputs

Position fuel and air dampers to open position, (if at this stage the dampers do not respond correctly to the up/down pushbuttons go to section: positioning motor checks)

Press 

At this stage the burner control box should go through purge part of cycle.

3.1 Does control box progress through purge?

yes - S16,S14 interlock ok
no - Is voltage present on input?

no - fault outside of MM
yes - is voltage present on output?

yes - fault outside of MM
no - fault on MM or plug-in connector.

Wait until START flashes. START should flash when the burner control box reaches the end of the purge part of the cycle.

Press . 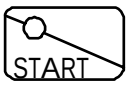

Position fuel and air dampers to ignition position, (if at this stage the dampers do not respond correctly to the up/down pushbuttons go to section: positioning motor checks)

Press 

At this stage the burner control box should go through ignition part of cycle.

3.2 Does control box progress through ignition?

yes - S16,S15 interlock ok
no - is voltage present on input?

no - fault outside of MM
yes - is voltage present on output?

yes - fault outside of MM
no - fault on MM or plug-in connector.

4 POSITIONING MOTOR CHECKS

It is not possible to find positioning motor related faults by following a set procedure. It is more a matter of carrying out a number of tests and making an assessment.

The following applies to fuel and air positioning motors. Repeat the tests for each motor

The following tests are for a motor that is connected normally. i.e. when  is pressed, the shaft of the motor moves clockwise.

If a system is connected to operate in a counter clockwise direction when is pressed, then the following tests have to be interpreted to accommodate this:

Deselect fuel
Select fuel

Press COM before COM stops flashing (5 seconds),

Press CLOSE (ensure ENTER flashes),

Remove positioning motor cover,
Measure the voltage (dc) at the following points on the printed circuit board assembly.

	Terminals:	Reading:
4.1	OV to 12V(+v)	11.5 to 12.5 volts

Reading correct?

yes - do next test
no - possible faults:-
a) Open circuit on 0V and/or +V between MM and positioning motor.
b) Fault on MM (no output voltage +V) or plug-in connector.

	Terminals:	Reading:
4.2	OV to W	0 to 3.6 V

(The readings on the wiper can be as high as 12 volts. The normal operating voltage is between 0 to 3.6 volts)

Reading correct?

yes - do next test
no - possible faults:-
a) Wiper of potentiometer open circuit or open circuit track on positioning motor circuit board
b) Fault on MM has driven motor outside normal working range.

Tests 4.1 and 4.2 can be repeated using the soldered joints on top of the potentiometer instead of the p.c.b. terminals.

Observe shaft of motor assembly (Do not press any front panel pushbuttons).
Note: The next test may be void if the damper hits a mechanical end stop.

4.3 Is shaft moving in either direction?

no - do next check
yes - fault on MM

4.4 Observe fuel and air displays
Is value steadily increasing or decreasing?

no - do next check
yes - possible faults: a) MM permanently driving motor up or down.
b) Wiper of potentiometer open circuit or open circuit track on printed circuit board.

Note: All following voltage measurements are with respect to neutral.

4.5 Measure voltage on LIVE terminal:

Is mains voltage present?

yes - do next check
no - possible faults: a) fault on MM no output from terminal 17
b) open circuit between MM and positioning motor
c) fault on plug in connector on MM.

4.6 Measure voltage on CW terminal

Is mains voltage present?

yes - do next check
no - possible faults: a) fault on motor winding
b) fault on positioning motor circuit board.

4.7 Measure voltage on CCW terminal

Is mains voltage present?

yes - do next check
no - possible faults: a) fault on motor winding
b) fault on positioning motor circuit board.

Observe positioning motor shaft

4.8 Press

Does shaft move in clockwise direction?

yes - do next check
no - possible faults: a) motor or damper jammed.
b) fault on MM or plug-in connector.
c) open circuit between MM and CW terminal on motor.
d) faulty motor assembly (possibly stripped gears) or fault on positioning motor circuitboard.

4.9 Press

Does shaft move in counter clockwise direction?

yes - do next check
no - possible faults:
a) motor or damper jammed.
b) fault on MM or plug-in connector.
c) open circuit between MM and CCW terminal on motor.
d) faulty motor assembly (possibly stripped gears) or fault on positioning motor circuitboard.

4.10 Measure voltage (ac) between LIVE and CW on positioning motor and press

Is voltage reading zero?

yes - do next check
no - possible faults:
a) fault on MM or plug-in connector.
b) open circuit between MM and CW terminal on motor.

4.11 Measure voltage (ac) between LIVE and CCW on positioning motor and press

Is voltage reading zero?

yes - motor ok
no - possible faults:
a) fault on MM or plug-in connector.
b) open circuit between MM and CCW terminal on motor.

If the above tests have been carried out and no specific fault is found proceed as follows:

Detach positioning motor from valve or damper. press one at a time and check for correct movement of positioning motor shaft. This will indicate whether valve/damper mechanism is jammed.

Replace "Servo" motor with known working unit see if fault disappears.
Replace MM with known working unit see if fault disappears.

After rectifying system, set Options for usual operation required.

2.9 OTHER INFORMATION AND ILLUSTRATIONS

2.9.1 Mini Mk.5 M.M. Facia

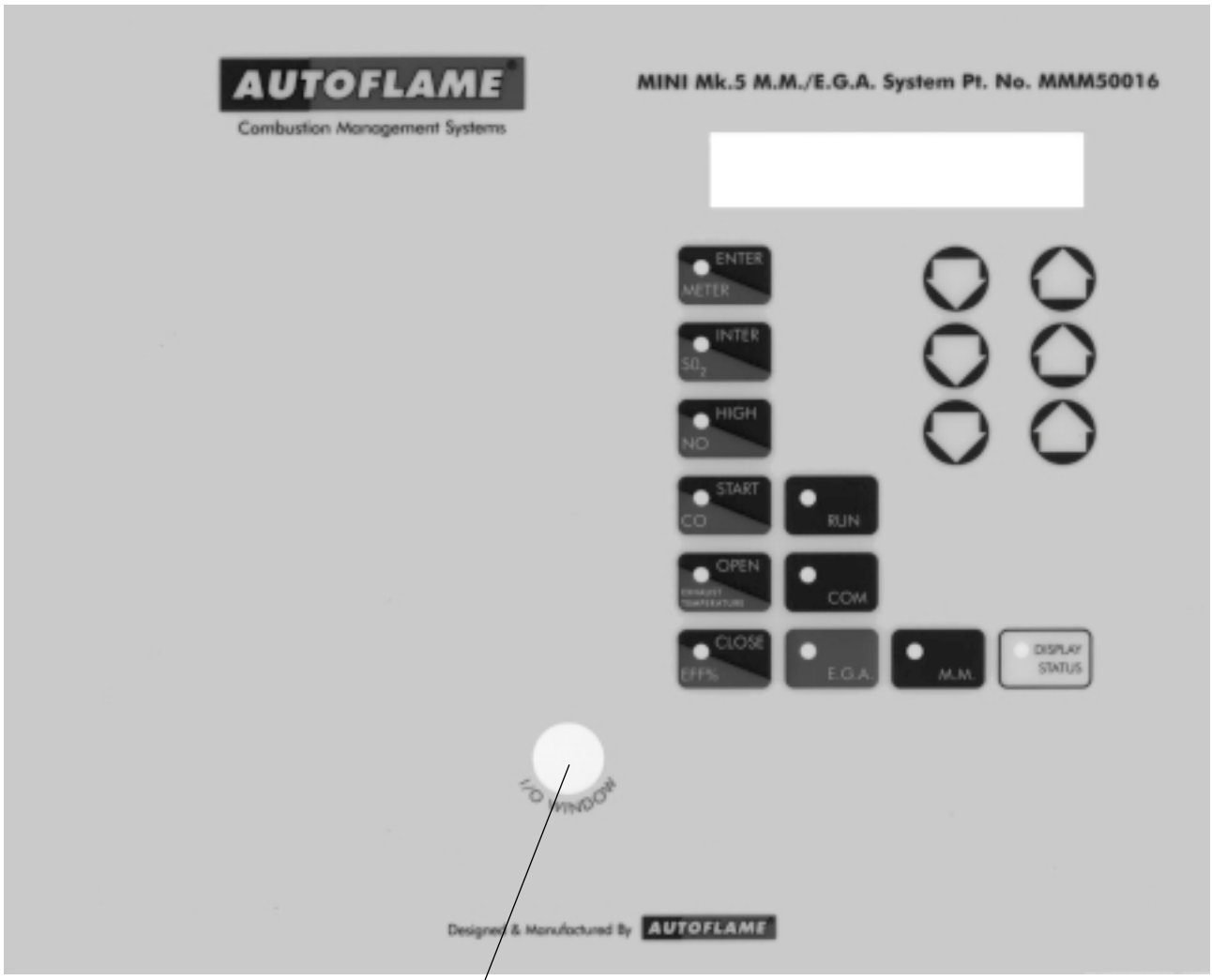

Infrared upload/download port

2.9.2 Positioning Motors Direction Change

EXAMPLE TO CHANGE DIRECTION
OF POSITIONING MOTORS.

FIG. A

MOTOR CLOCKWISE ROTATION

M.M. MODULE

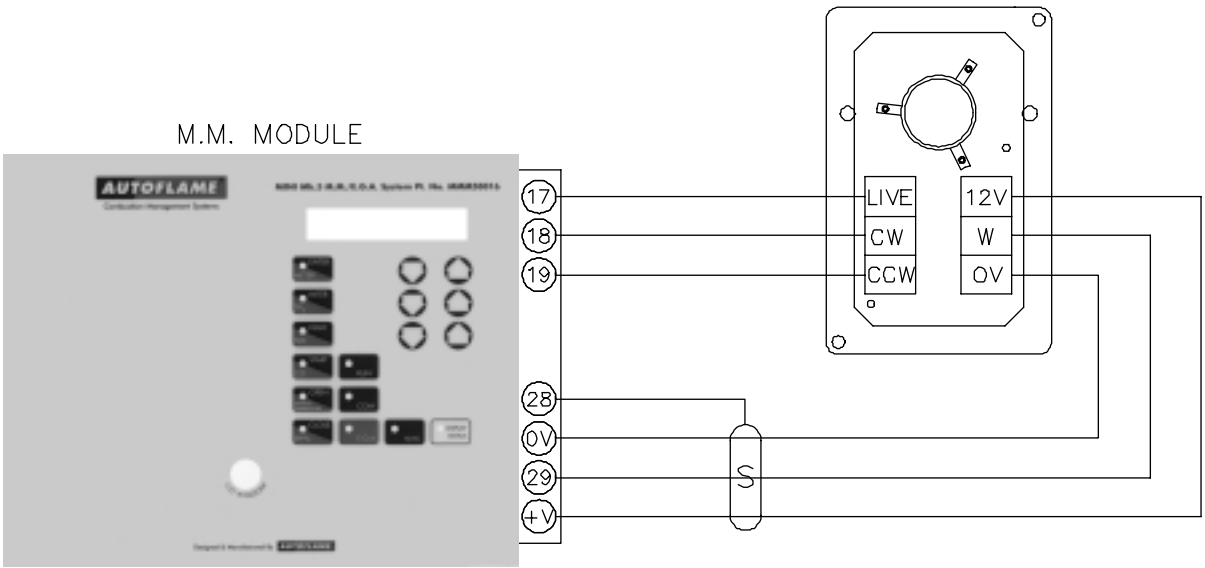

FIG. B

MOTOR ANTICLOCKWISE ROTATION

M.M. MODULE

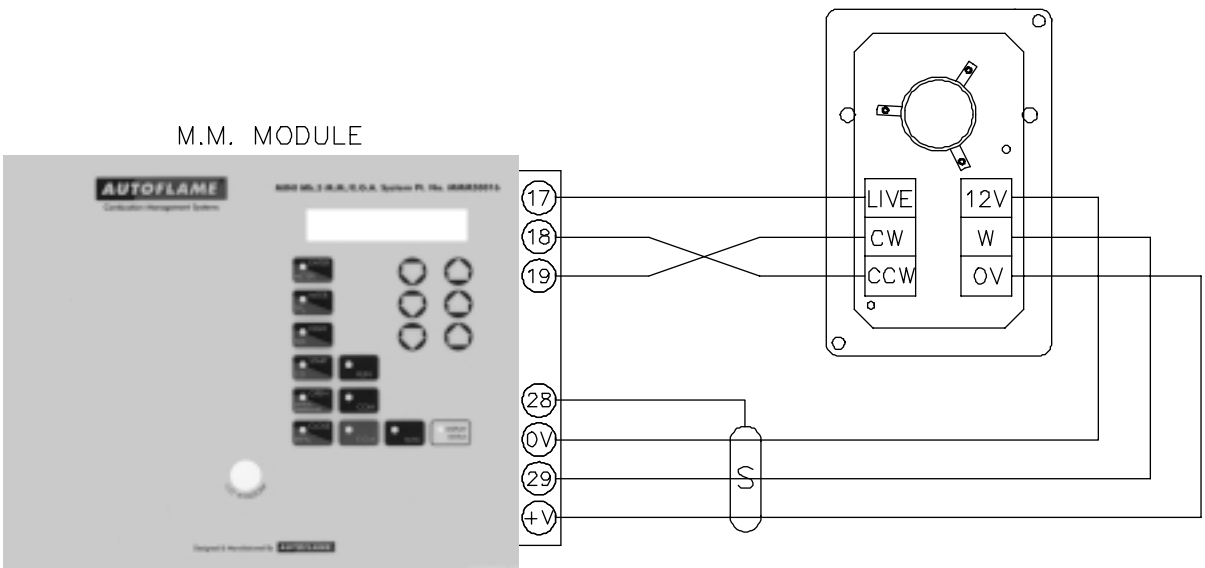

FOR ILLUSTRATION PURPOSES FUEL MOTOR CONNECTIONS ARE SHOWN.

11:9:89/1318/SBK

2.9.3 M.M. Display Against Positiong Motor

M.M. DISPLAY AGAINST SERVO MOTOR

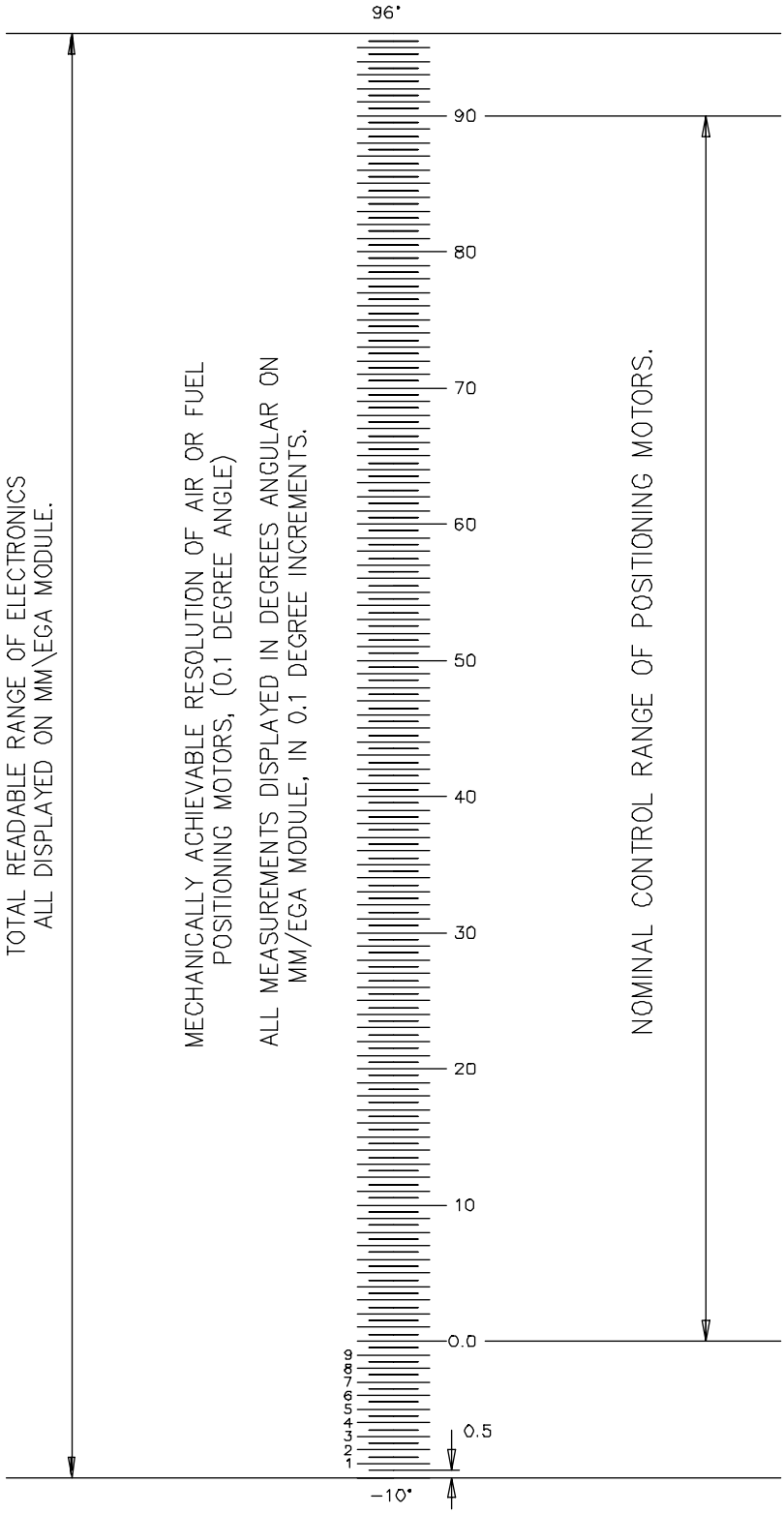

4:5:88/1314/SBK

2.9.4 Positioning Motor Control Panel

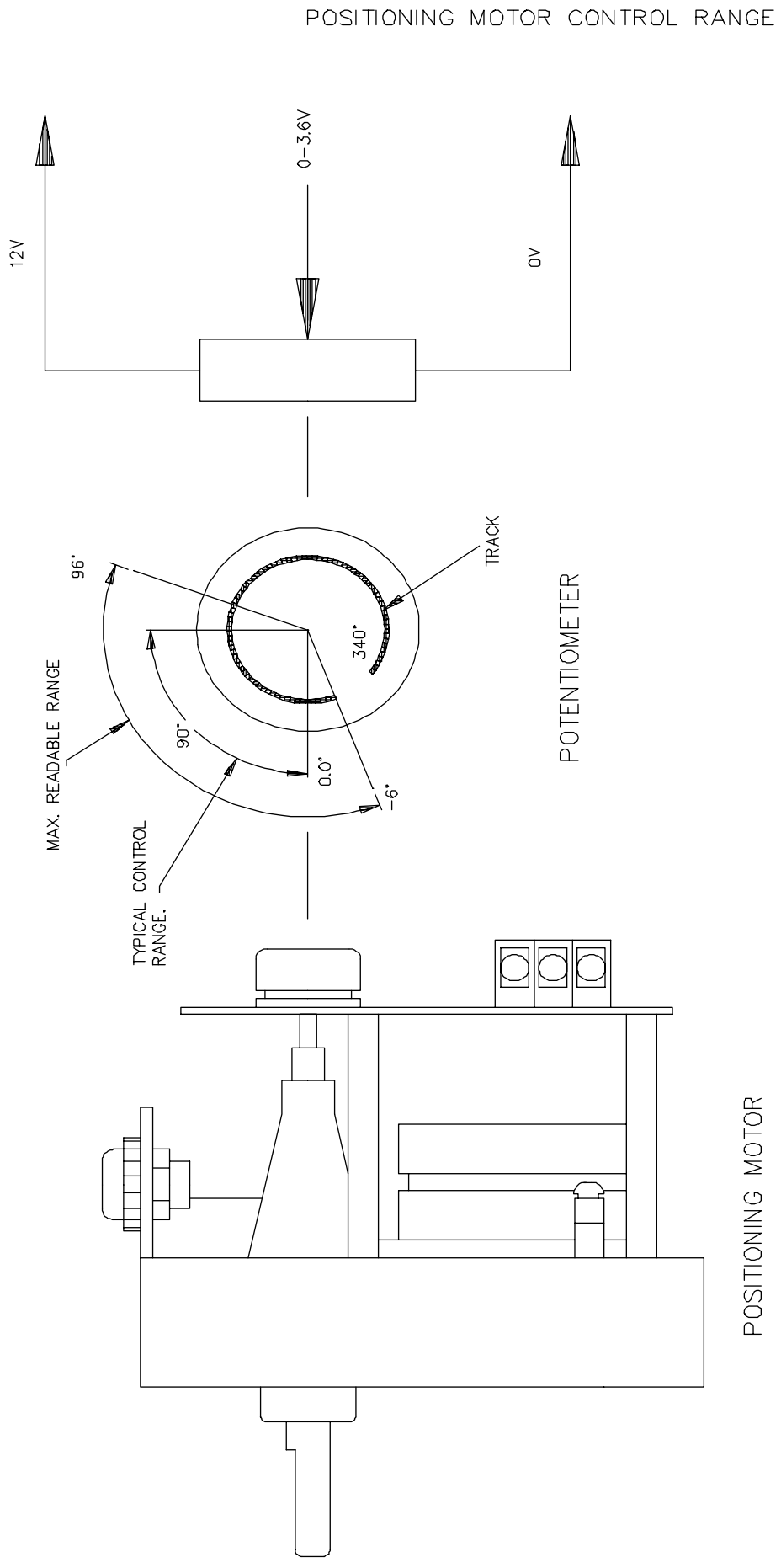

2.9.5 Timing Diagram - M.M. Flame Safeguard

TIMING DIAGRAM FOR M.M. UNIT TO BURNER CONTROL BOX.

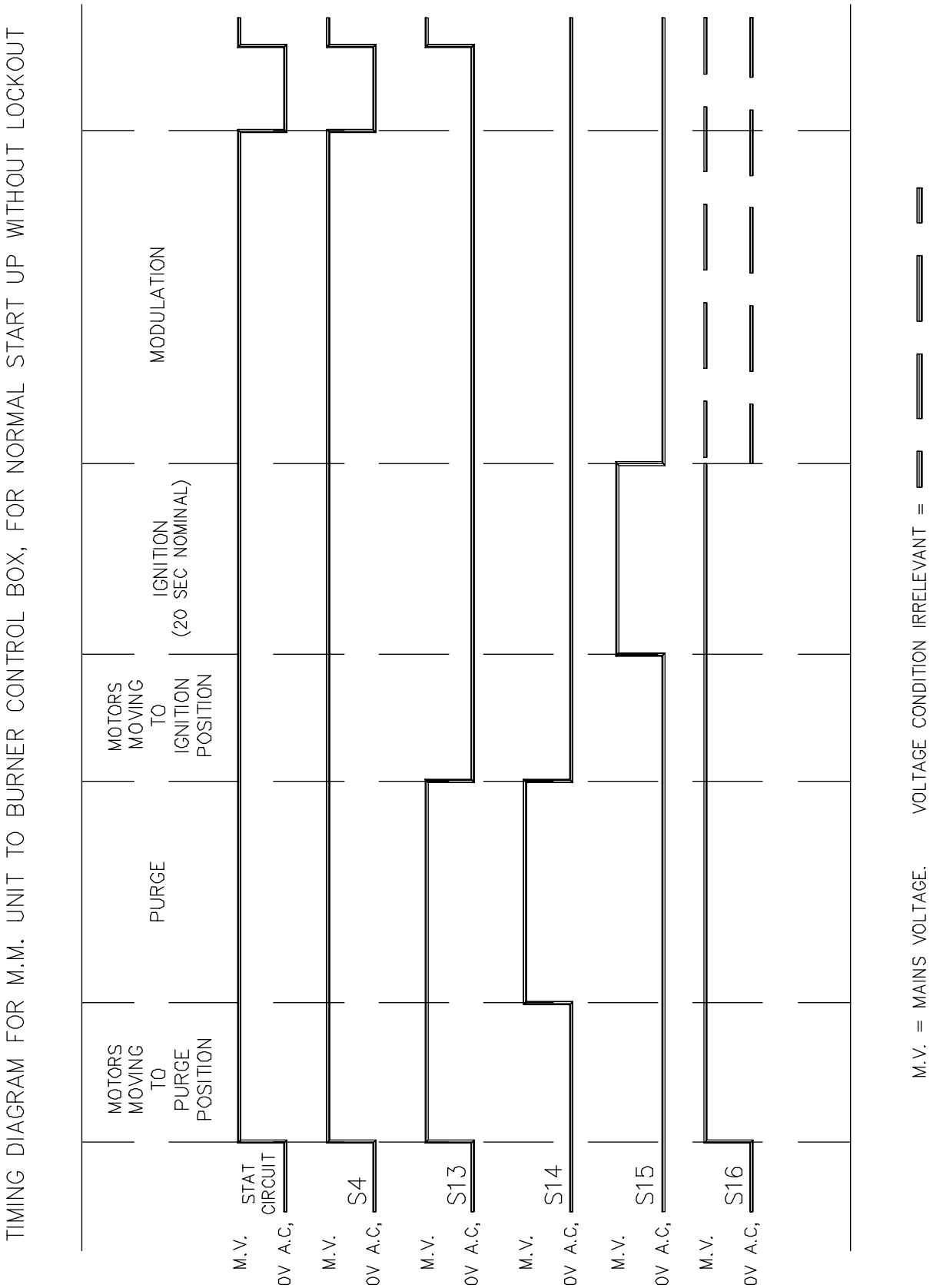

6:9:89/1399/SBK

2.9.6 Infrared Upload/Download

The Mini Mk.5 M.M. has an infared upload/download facility. The infrared I/O window is situated on the front facia. A specific infrared upload/download lead and PC hosted software are required to utilise this facility.

To download, the Mini Mk.5 must be set to commissioning mode, but the password does not need to be entered. To upload, the password must be entered and the close LED must be flashing or steady.

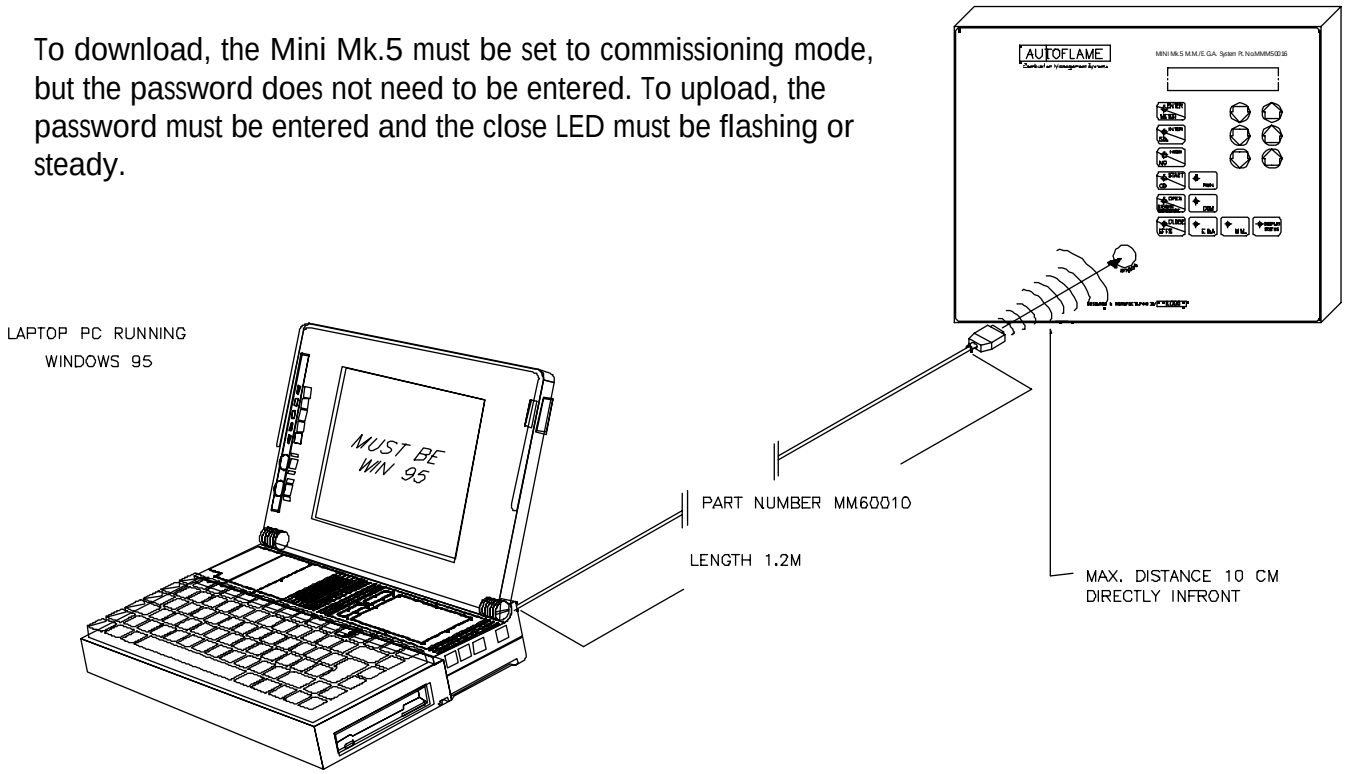

Software Installation

Insert diskette 1 into drive A: (your first floppy drive) and from Windows click on the Start button and choose Run. Type A:\SETUP and press the enter key, then follow the instructions on the screen.

When SETUP has completed, insert the key diskette into drive A:, click on Start and choose Run. Type A:\INSTALL and press enter.

The software need to be configured to the serial (COM) port that the IR lead is connected to. This happens the first time the IR Upload/Download software is run.

WARNING

IT IS THE RESPONSIBILITY OF THE OPERATOR TO ENSURE THAT AFTER AN UPLOAD ALL THE OPTIONS, PARAMETERS AND FUEL/AIR RATIO COMMISSION DATA ARE CHECKED FOR CORRECTNESS.

2.9.7 Relationship Between Fuel and Air Positions

RELATIONSHIP BETWEEN
FUEL & AIR POSITIONS

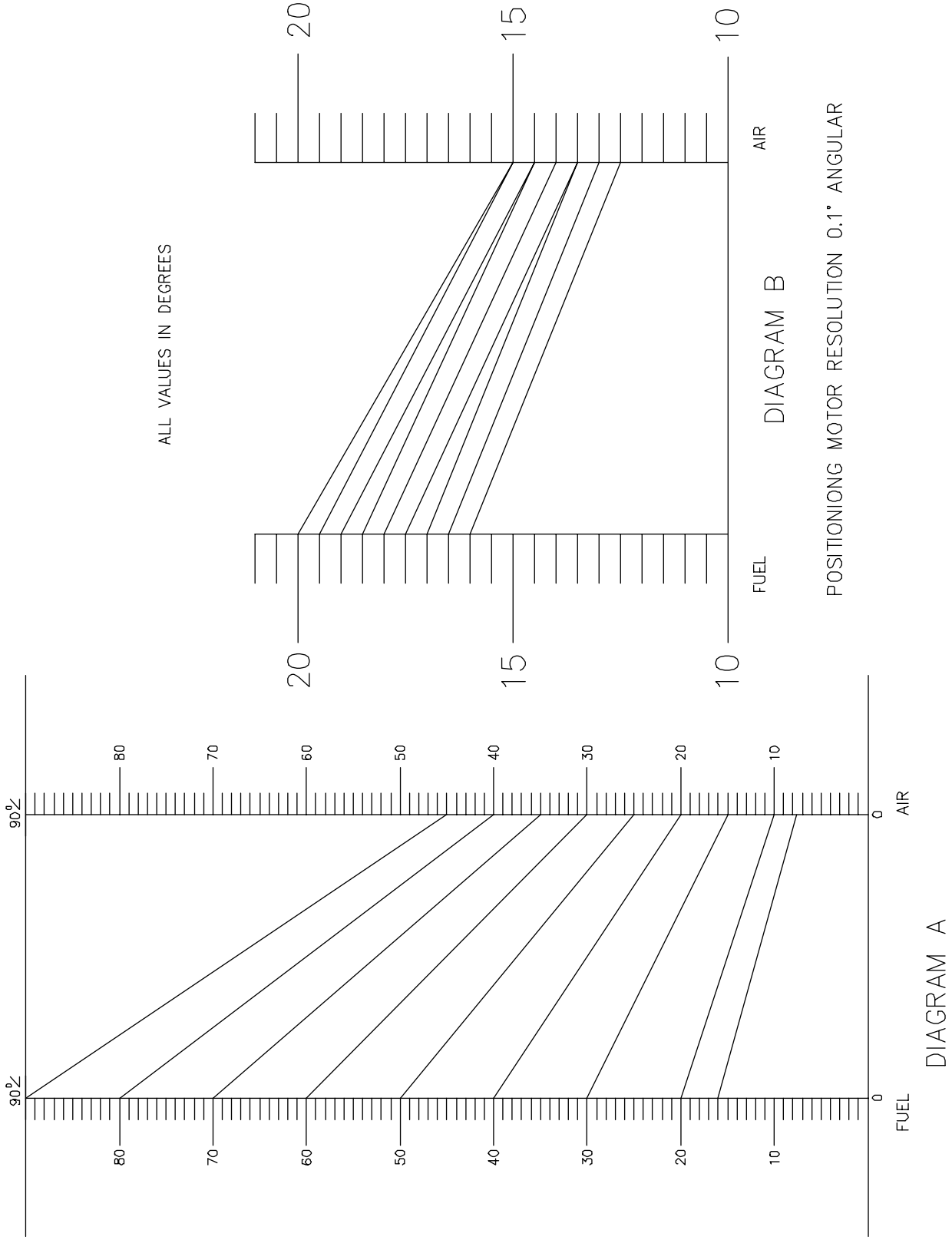

4: 5: 88/1315/SBK

2.9.8 Dimensions and Mounting Details

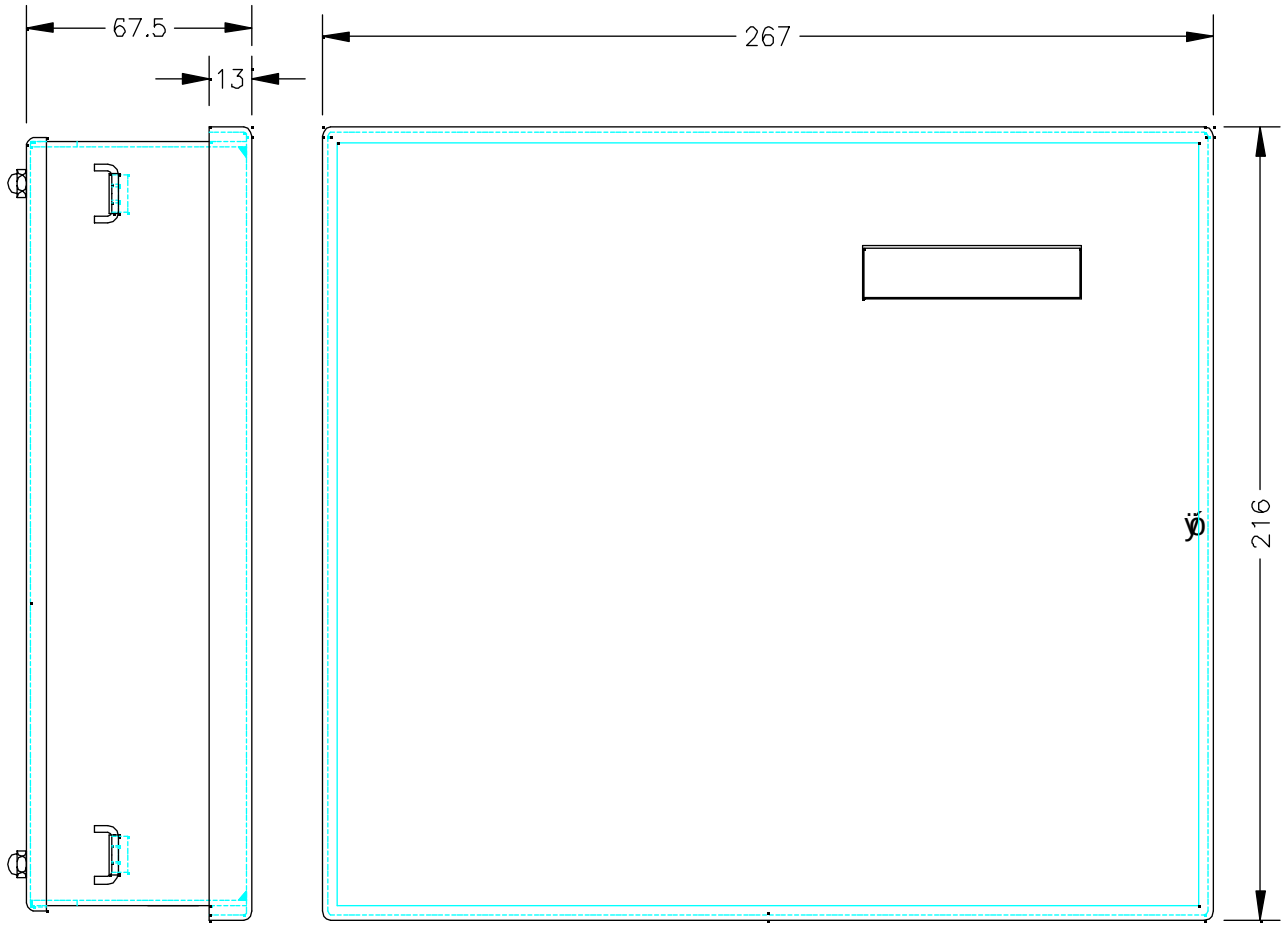

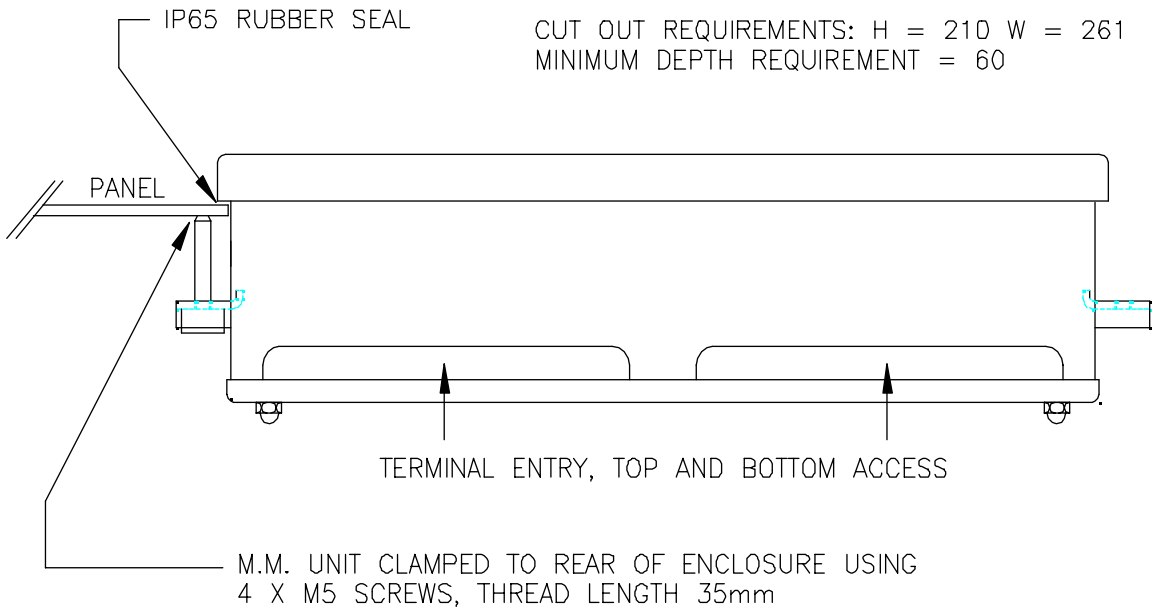

3197/15:06:98/SBK

2.9.9 Maintenance and Servicing

The Micro Modulation Unit uses solid state technology. It requires no routine maintenance. If it develops a fault that it can diagnose and display it will do so.

The positioning motors/gas/oil valves also do not require routine maintenance. Any fault associated with these parts is usually diagnosed by the MM.

2.9.10 Installation Precautions

The reliability of the equipment may be impaired if used in environments where strong electro magnetic fields exist. If for example the equipment is installed in a boiler house at the top of a high rise building where radio systems exist then additional EMC (Electro Magnetic Compatability) measures may have to be considered.

2.9.11 Electrical Specifications

General Information

Mains supply voltage input range:	+10 -15% nominal
Power consumption:	Approximately 10 watts

Load Ratings Individual Terminals

Input terminals:

33, 34, F1, F2, F3, S4, S13, 41 current loading:	Approximately 1 milliamp (240v) Approximately 2 milliamp (110v)

Output terminals maximum current loading:

CR1, CR2	110 milliamps (dc)
42	40 milliamps
S16,S15,S14	30 milliamps

Other terminals:

17, 18, 19, 20, 21, 22, 23	Dedicated for use with Autoflame Positioning Motors
29, 32, 27, 0V, +V, 28	Dedicated for use with Autoflame Positioning Motors
38, 61, 60	Dedicated for Autoflame Temperature/Pressure Detectors.
52, 51, 49, 48	Dedicated for use only as detailed in this manual.
E, N, L	Mains Supply

Screened Cable

The screened cable used from the MM to the servo motors and detectors must conform to the following specification:

16/0.2mm PVC Insulated Overall Braid, Screened, PVC Sheathed.

Sixteen wires per core;
Diameter of wires in each core 0.2mm;
Rated at 440 volts a.c. rms at 1600 Hz;
DEF 61-12 current rating per core 2.5 Amps;
Maximum operating temperature 70 degrees C.;
Nominal conductor area 0.5 square mm per core;
Nominal insulation radial thickness on core 0.45mm;
Nominal conductor diameter per core 0.93mm;
Nominal core resistance at 20 degrees C. 40.1 Ohm/1000m.;
Nominal overall diameter per core 1.83 mm.;
Fill factor of braid screen 0.7;
Equivalent imperial conductor sizes 14/0.0076.

Use the number of cores suitable for the application.
A universal part numbering system appears to have been adopted for this type of cable as follows:

16-2-2C 2 Cores
16-2-3C 3 Cores
16-2-4C 4 Cores
16-2-6C 6 Cores

(5 Cores not readily available).

Data Cable

Data cable must be used for connections between MMs for twin burner/sequencing applications and between MMs and EGAs.

Types of data cable that can be used:

1. Beldon 9501;
2. STC OS1P24.

Samples are available upon request.
Cable can be ordered directly from Autoflame Engineering.

DESCRIPTION OF CONNECTIONS

Throughout this description, unless otherwise stated, 'signal' is to be interpreted as meaning 240Vac. The term Control Box is to be interpreted as meaning the flame safe guard control unit.

The following information will be more meaningful if read in conjunction with the input/output schematic and timing sequence diagram found in Section 2.

For correct operation between the M.M. unit and a burner control box a specific sequence of signal timing pulses is necessary. The M.M. has five specific input/output terminals (S4, S13, S14, S15 and 16) which are solely for the purpose of the interaction to and from the control box.

The terminals S16,S15,S14 are described here, such that S16 is an input, S15 and S14 are outputs. On some control boxes S15 and S14 are inputs and S16 is an output. The following descriptions may have to be interpreted to accommodate this when appropriate.

The timing sequence starts with the completion of the burner stat circuit . This must be indicated to the M.M. by a signal input on S4. At the same time the M.M./E.G.A. expects a signal input on S13. Together these signals are a directive for the M.M. to attain the purge position. On correct receipt of both signals the M.M. unit drives the positioning motors to their purge positions. When the purge positions are reached, the M.M. outputs a signal on S14. This indicates to the control box that it must now proceed through purge. On completion of the purge period the control box removes the signal from S13. The M.M. interprets this as a directive to drive the positioning motors to the ignition position. The M.M. removes the signal output from S14 and drives the valves to the ignition position. When in position the M.M. outputs a signal on S15. The control box then proceeds through the burner ignition sequence. The M.M. holds the ignition positions for a nominal period of 20 seconds (adjustable) after outputting the signal on S15. The M.M. thereafter removes the signal output on S15 and modulates.

DESCRIPTION OF INDIVIDUAL INPUTS/OUTPUTS RELEVANT TO THE CONTROL BOX

S4 Input to M.M.:- Signal must be present whenever the stat circuit is made. Indicates burner is to be firing. Whenever this signal is removed the M.M. maintains the CR1 relay open for ten seconds thereafter and sets the positioning motors to their closed positions.

S13 Input to M.M.:- Signal directs positioning motors to purge position (provided signal is present on S4). When signal is removed M.M. directs positioning motors to ignition positions.If detected during modulation CR1 relay is opened.

S14 Output from M.M.: Signal indicating the positioning motors are at the purge position. Only output during burner start up.

S15 Output from M.M.: Signal indicating the positioning motors are at the ignition position.Only output during burner start up.

S16 Input to M.M.: This signal must come from a proving output on the control box. i.e. an output that is only available when there is no lockout or other fault condition on the control box. This input is used by the M.M. as a source for the signal outputs on S14 & S15.

DESCRIPTION OF OTHER INPUT/OUTPUT TERMINALS

CR1	Output for driving relay (normally open contacts wired into stat circuit). When M.M. optioned for use with detector this output is used to operate as the working stat (12V d.c.)
F1,F2,F3	Inputs. Input signal to select appropriate fuel: F1 = Natural Gas, F2/F3 = Oil.
41	Input signal to indicate that this boiler is LEAD boiler for the purpose of sequencing.
42	Output to drive relay. When relay is energised this can close a boiler shut off valve. Only relevant for sequencing purposes.
L,N,E	Mains power supply to unit.
38,61,60	Connections to temperature or pressure detector.
33,34	Inputs to implement Hand/Auto operation.
17	Output. Voltage supply to positioning motors (same voltage as L terminal).
18,19	Outputs to drive CH1 positioning motor up/down respectively.
20,21	Outputs to drive CH2 positioning motor up/down respectively.
22,23	Outputs to drive CH3 positioning motor up/down respectively.
SCR,0V,12v	12 volt dc supply to positioning motors and pressure detector.
29,32,27	CH1, CH2, and CH3 positioning motor feedback signals to sense position.
51	Data connection to E.G.A.
49,48	Data connection to other M.M. systems for purposes of sequencing and/or D.T.I. communications.
52	Screen connection. To be used when connecting screens of serial data cables.
CR2	Output for driving relay (normally open contacts wired into stat circuit). Relay opens in event of M.M. error provided for safety (12V d.c.).

2.10 FUEL FLOW MEASUREMENT AND METERING OPERATION

1. Go to Options, set Option 57 to 1 (default 0).

2. When the above is displayed press METER ENTER , this will initiate the Flow Metering setup mode.

3. Next time the burner starts the M.M. will go into the ten point setup mode for Flow Metering automatically.

4. In this mode the first row of the LCD will show the CH1 valve position in degrees angular.

   The Lower buttons will be used to enter the fuel flow in the chosen fuel flow unit per minute. This value is displayed on the second line of the LCD display with the point being currently set.

   Note:

   a) The minimum numerical value for fuel flow that can be entered into memory is 0.01.
   The maximum numerical value for fuel flow that can be entered into memory is 999.0

   b) The values are entered in descending order, i.e. Point No.1 is maximum flame and Point No.10 is at minimum flame. The 10 sequential point on the load index are allocated automatically by the M.M. All values are in units/minute.

5. When fuel flow has been calculated or read off of a commissioning fuel flow meter the value is entered as detailed in Point No.4.

   The METER ENTER button is then pressed and the value is passed into the M.M. memory.

6. The above detailed data entry routine is repeated until all 10 points have flow values allocated to them.

7. When the last (10th) point has been entered the M.M. blanks and restarts as if just powered up.

8. To display Fuel Flow Metering press STATUS then press METER ENTER

To restore normal STATUS display mode press METER ENTER again

2.11 GOLDEN START

This facility enables an ideal ignition/start position to be set into memory that is not necessarily low flame or indeed part of the standard modulating load index.

To enable this facility to go to Option 29, set to 0 (zero), (Default value 1) and press ENTER MEMORY.

To disable this facility go to Option 29, set to 1 and press ENTER MEMORY.

To implement the above, the system/burner is commissioned in the normal way, i.e. Press COM

enter Password, enter Close position, enter Open position, enter Start position and adjust Fuel/Air positioning motors to give initial arbitrary ignition position. This position is not memorised. The burner will fire and the start position LED will flash again.

Press START, LED will remain stable, adjust Fuel/Air positioning motors to give the ideal

ignition/start up position.

Press ENTER MEMORY and proceed with the commissioning routine in the normal way.

Notes:

1. The Golden Start/ignition position of the fuel and air positioning motors is completely independent from the modulating load index commissioned value data.

2. The facility is particularly useful on combustion systems with large turndowns and when firing heavy fuel oil, as it enables the burners to start/ignite at a fuel rich position and then, after a stable flame is established, to revert to the commissioned values for Fuel/Air ratio.

3. If this facility is used on duel fuel or multi fuel applications then Golden Start/Ideal Ignition Position Data must be entered for all fuels.

4. The time that the M.M. holds the Golden Start position for is adjustable. The delay from Golden Start to normal position can be adjusted in the Parameters. Parameter 15 normal default value is 5 seconds. Maximum time delay in seconds is 255; Minimum time delay in seconds is 0 (zero).

5. If the commissioning engineer wishes to change the Golden Start position retrospectively this can be re-entered, without fully recommissioning the burner, in the following manner:

   Go into Commission mode, enter Password, enter Closed and Open positions and enter, as previously described, to the point where High flashes then deselect fuel or power down. In this way the new Golden Start position is entered.

6. It is important to appreciate that the Golden Start position is completely independent of the Fuel/Air paired values that are entered for the normal modulating load index/range.

2.12 ONE POINT CHANGE

One point change facility

To change a point:-

Start up the burner in the normal way.

Once modulating press CO START and COM simultaneously. The password should be displayed. Set the password and press Eff% CLOSE in the same way as if going into normal commissioning, the channel position values should be displayed. The valves track to the nearest commission point (e.g. HIGH/INTER/START).

When all the values have settled at their appropriate positions ENTER flashes. If this point is to be changed press FUEL METER ENTER MEMORY If not press the CH1 button to move to the next point up or the CH1 button to go to the next point down. The M.M. detects which point has been selected and will steady the appropriate LED on either HIGH, INTER or START as during normal commissioning. If EGA is not optioned ENTER will be flashing otherwise EGA will flash. It should now be possible to adjust each value individually.

Adjust the values as desired and proceed to press FUEL METER ENTER MEMORY The M.M. will revert to just ENTER and

RUN flashing. If desired another point can be selected and changed otherwise

press RUN and the M.M. reverts to normal modulation. If the CH1 (fuel) HIGH or START

position has been adjusted check the flow metering. It is likely that the 10 point flow calibration must be carried out again.

2.13 A.A. FACILITY

This facility enables the M.M. to remain at High Fire regardless of required temperature/pressure. For use when testing boiler safety circuits.

Operation

There is no option for this, it is always active and works on temperature and pressure. When activated the CR1 relay will not open (regardless of Actual being greater than Required) and the burner will go to high fire regardless of the P.I.D. When active the Required and Actual displays just show "AA".

To activate:-

If temperature - Short circuit 60 to 61. (detector can be shorted);
If pressure - Short circuit 61 to 0V. (Open the connection between the output signal from the pressure detector and 61, then short 61 to 0V. A break before make changeover switch can achieve this. All connections to the switch must be screened).

EXAMPLE USING A TEMPERATURE SENSOR

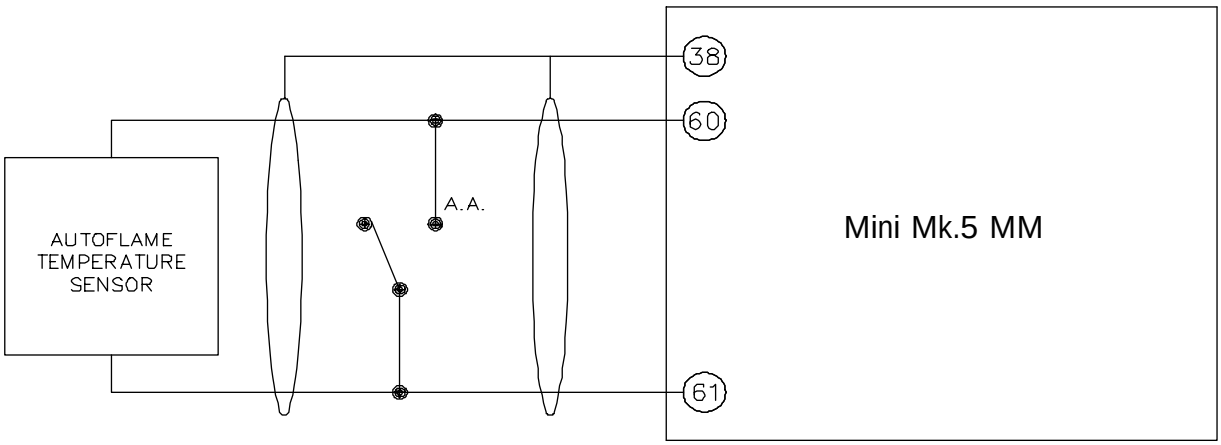

EXAMPLE USING A PRESSURE SENSOR

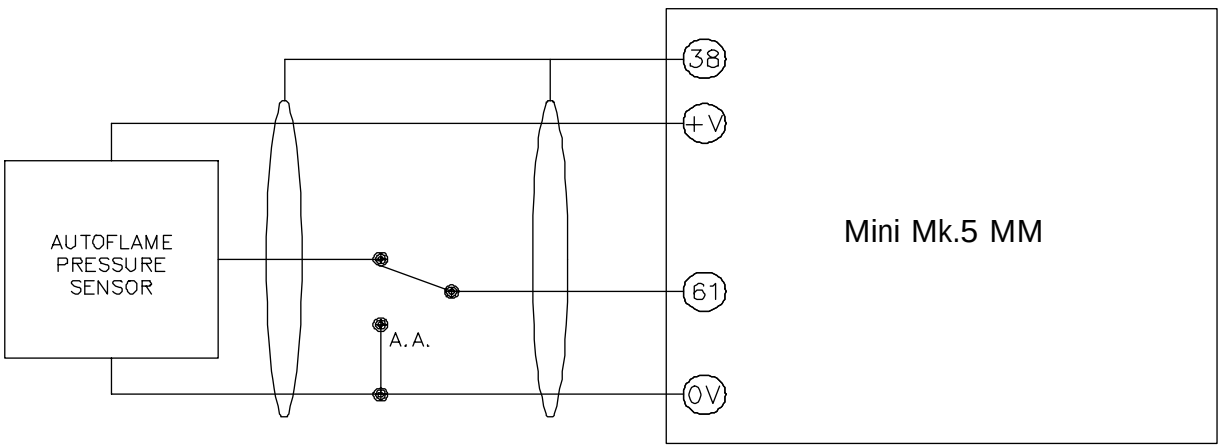

Section 2.14: Mk6 M.M. Micro Modulation

Section 2.14: Mk6 M.M. Micro Modulation

2.14.1 MK.6 M.M. CONTROL UNIT

2.14.2 MK.6 COMMISSIONING AND SETTING UP PROCEDURES.

2.14.2.1 Introduction.

The commissioning procedure as described must be strictly adhered to. Anybody commissioning a Micro Modulation system must have an adequate understanding of combustion plant. In the wrong hands hazardous conditions could be made to exist.

The fundamental idea of the system is to set a fuel valve position and then set a corresponding air valve position. Care must be taken when adjusting the fuel and air positions so as not to create any unstable combustion conditions, e.g. moving the fuel valve to the open position without increasing the air valve correspondingly.

If the system being commissioned is an M.M., without E.G.A., then a combustion monitor is required to check the exhaust gases. If the system does have an E.G.A., then a combustion monitor should not be necessary as the E.G.A. performs all normal exhaust gas measurements. When burning oil a smoke detection device is necessary to check smoke generated is within limits.

Ideally to implement commissioning as quickly as possible arrange for a substantial load on the boiler. The commissioning procedure can be interrupted due to excess temperature or pressure, causing the burner to turn off. In these instances the commissioning data accumulated so far is not lost. When the burner is called back on the system starts up automatically and commissioning can proceed from where it left off.

Once the burner has been fired the maximum fuel position is entered first, then descending fuel positions are entered consecutively until finally a minimum fuel position is entered. The CH1 and CH2 positions must always be less than the ones previously entered. However with CH3 - CH6 it is possible to move the position above or below the previously entered point.

COMMISSIONING PROCEDURE (Systems without Exhaust Gas Analyser).

On a newly installed system the following procedures should be carried out as listed.

1. Check all interconnecting wiring between the M.M. and external components is correct.
2. Set Options required (Refer to Option Section 2.14.2.4).
3. Set up positioning motors.
4. Programme fuel/air positions.

On a previously commissioned system, it is possible to omit steps No.s 1, 2 or 3.

Notes on Programming Fuel Air Positions

If during commissioning the burner turns off, due to the 'stat' circuit opening or a lockout, it is possible to carry on commissioning from the last entered position. This is possible as long as the HIGH position has been entered, and the fuel selected is not changed. When the 'stat' circuit is closed again, or lockout cleared, the system will purge automatically. Commissioning will then be resumed at Step 7. Automatically the system bypasses the HIGH position entry and resumes the commissioning procedure from the last entered INTER position . Effectively commissioning can now be carried on from Step 12.

If CLOSE remains flashing when pressed, this indicates that the 'stat' control circuit is probably not closed. Please refer to Fault Finding section.

If OPEN remains flashing when pressed, this indicates that the M.M. is not receiving a 'go to purge position' signal. Please refer to Fault Finding section.

During commissioning press M.M. to display the Channel 1 to 6 values.

Press DISPLAY STATUS to display the fuel selected, Actual and Required values. (The Required value will also be displayed but cannot be adjusted during commissioning. During commissioning theBurner Control Relay relay stays closed all the time regardless of the Actual value).

For the Mk6 Evolution, OPEN and CLOSE are now stored during commissioning. This means if a lockout occurs upon the first burner light off during commissioning there is now no need to re-enter the open and close positions. The burner will restart once the lockout has been reset and go straight to purge, once purge is complete you are asked to again set the start position.

2.14.2.2 Programming Fuel Air Positions (Systems without EGA)

Ch1, Ch2 etc refers to the rows of buttons with Ch1 at the top.

Note: Throughout the commissioning procedure the COM l.e.d. is illuminated.

1. Ensure 'stat' control circuit is closed.

2. Select fuel. CLOSE flashes. 'ENTER PASSWORD' is displayed.

   Note: If fuel selected is being re-commissioned, press COM before COM l.e.d. stops flashing (five seconds).

3. Enter Access Code. Adjust the numbers using the respective buttons.

   When numbers are set, press CLOSE (CLOSE l.e.d. steady, ENTER flashes.)

   Display indicates angular position of servo motors.

4. Use CH1 and CH2 to set positioning motors to 0.0. Press ENTER MEMORY (OPEN flashes).

5. Press OPEN (OPEN steady, ENTER MEMORY flashes).

6. Use CH1 and CH2 to set positioning motors to their fully open positions. This is nominally 90.0 for gas butterfly valves and burner air dampers.

   Press ENTER MEMORY (System purges, at end of purge START flashes).

7. Press START (START steady, ENTER MEMORY flashes).

   ****WARNING** Do not enter START position before reducing fuel input.**

8. Use CH1 and CH2 to set positioning motors to positions where ignition can take place.

9. Press ENTER MEMORY (Burner ignites, HIGH flashes).

10. Press HIGH (HIGH steady, ENTER MEMORY flashes).

11. Use CH1 and CH2 to set maximum firing input (do not exceed OPEN position values).

12. Press ENTER MEMORY (INTER, or INTER and START flash).

    Note: Only INTER flashes if the number of INTER positions entered so far is less or equal to three, thereafter INTER and START flash.

13. Press INTER o r START (INTER or START steady, ENTER MEMORY flashes).

14. Use CH1 and CH2 to reduce the positions.

    If present position is an INTER position, go back to 12/, otherwise proceed further.

15. Press ENTER MEMORY (After a short pause RUN flashes).

16. Press RUN to set system into normal modulating mode.

Setting Positioning Motors.

Autoflame supply three standard sizes of positioning motors - large, small and industrial. All can be used for positioning fuel and air dampers.
Both types can be configured to drive clockwise or counter clockwise to open a valve or damper.

Refer to drawing numbers:	Layout of large positioning motor,	Section 2.2.3.4
	Layout of small positioning motor,	Section 2.2.3.3
	Industrial Positioning Motor, Refer	Section 8.10

Viewing the shaft end-on, from the potentiometer end, all positioning motors drive in a clockwise direction if power is applied between the LIVE and CW terminals, and counter clockwise if the power is applied between the LIVE and CCW terminal.

The operation of fuel valves and air dampers is often such that they open in a clockwise direction. If operation needs to be reversed, it is necessary to swop various wiring connections between the M.M. and the positioning motor(s). An example of reversing the operation of a fuel valve is shown in figure B, Section 2.9.2. Figure A shows the connections for normal operation.

Set Up Procedure:

Before a burner is fired it is essential to set up each Micro Modulation positioning motor.

A tamper proof screwdriver is required. (These can be ordered from Autoflame)

Usually control valves/air dampers, that the positioning motors drive, move through up to 90 degrees angular. The M.M. system has the ability to drive valves through up to 96 degrees. Please contact Autoflame technical department for advice on applications for ranges greater than 90 degrees.

All readings displayed on the MM are in degrees angular. It is necessary to adjust the potentiometer in the positioning motor assembly so that the M.M. reads 0.0 when the relevant valve/damper is at its closed position.

To set up a positioning motor, first ensure Option 12 is set to 0, (this prevents E.G.A. 'COOL' from being displayed). Put the M.M. into the commissioning mode so that the CLOSE l.e.d. is steady and the ENTER l.e.d. flashes (see section on Commissioning). By doing this it is possible to position the valve/damper mechanically by using the appropriate up and down buttons.

Remove the positioning motor cover.

Warning Electrical Connections are live.

For air positioning motor(s) carry out the following procedure:

Use the up/down buttons for the relevant air damper to position the air damper to its physically closed position. Loosen the three tamper proof screws just sufficiently to enable the potentiometer to rotate. Rotate the potentiometer clockwise or counter clockwise until the relevant display window reads 0.0. Tighten the three tamper proof screws gently until the pot. is secure. Do not overtighten the screws. Check display still reads 0.0, if not repeat adjustment process.

For fuel positioning motor(s) carry out the following procedure:

On Autoflame gas, oil and gas/oil combination valves it is necessary to remove the positioning motor. Manually position the oil/gas valve slot to its closed position. Observe the position of the drive pin on the positioning motor. Use the relevant up/down buttons to position the pin so that when the positioning motor is reassembled to the valve it is in line with the slot. Reassemble the positioning motor to the valve, loosen the three tamper proof screws and proceed to adjust the potentiometer position until 0.0 is displayed.

2.14.2.4 Options

To Select Options Mode.
Ch1, Ch2, Ch3 refer to the rows of buttons respectively starting with CH1 at the top.

Option values can be changed by entering the Option mode. The password must first be entered.
To enter the password follow the steps listed:

Either deselect and then select fuel or power down and then up.

If system is already commissioned, press COM before the COM l.e.d. stops flashing.

If system is not already commissioned, commissioning mode will be set automatically.

“ENTER PASSWORD” is displayed.

Use the CH1 and CH2 to set the Password codes. Then press CLOSE

To select the 'SET OPTIONS' screen, Press the Ch1 simultaneously.

To change the option number use the CH2 buttons.

To change the value use the CH3 buttons.

Any number of Option values can be changed when in Option mode.

When changes have been made press ENTER MEMORY

All new Option values are then permanently stored.

Options marked ** are new to the Mk6 Evolution MM.

Option No.	Factory Setting	Option Value	Description
1.	**3**		**Boiler Temperature/Pressure Sensor Type:**
		3	0-400C Temperature Sensor (MM10006 & 7).20-390 C. (50 - 730 F.)
		4	Unused
		5	Unused
		6	0-18 Bar Pressure Sensor (MM10008) 2.0 - 23.0 bar (5 - 330 P.S.I.)
		7	0-30 Bar Pressure Sensor (MM10009) 2.0 - 45.0 bar (30 - 650 P.S.I.)
		8	0-3.0 Bar Pressure Sensor (MM10010) 0.2 - 3.80 bar (3.0 - 55.0 P.S.I.)
2.	**60**		**Motor Travel Speed:** The value is not specific to a time/distance ratio. If the speed of the motor is too fast then increase this option value. If too slow, decrease the value. This speed adjustment is only relevant during modulation. At other times the motors move at full speed or as set for Purge in Option 75.
		5-240	Adjustment Range
3.	**0**		**Post Purge**: If system is required to do post purge, set this option value to 1. The period of time that the air fan runs for is governed by the flame safety control. The M.M. will open the air damper to the HIGH or OPEN position, if this option is set. It opens the damper immediately after the stat control circuit opens. The M.M. keeps the damper open for the period of time specified in option 4. This period of time is completely unassociated with the flame safety control. The full period of time set in option 4 elapses before the M.M. will consider another burner start up. **NB** This option only applies when an external flame safeguard is being used.
		0	System does not post purge.
		1	System does post purge.
4.	**40**		**Post purge time**: (Only relevant if option 3 is set to 1). **NB** This option only applies when an external flame safeguard is being used.
		10-250	Seconds.
5.	**0**		**Purge position**: This selects the purge position. (Applicable to Channel 1-4 when selected, See Options 67 - 70). VSD channels 5 & 6, if optioned, purge at open position regardless of this option setting. It also applies to post purge if option 3 is set to 1.
		0	Selected Channel purges at HIGH position.(High Fire Position)
		1	Selected Channel purges at OPEN position.(Full span of servomotor as entered during commissioning)

Option No.	Factory Setting	Option Value	Description
6.	**10**		**P & I control**: Options 6 and 7 are used for adjusting the proportional and integral settings of the M.M.'s built in P + I + D controller. See Option 37 for the derivative adjustments. *Example of proportional band offset: Required value = 100 C, Proportional offset = 10 (i.e. Option 6 set to value 10).* 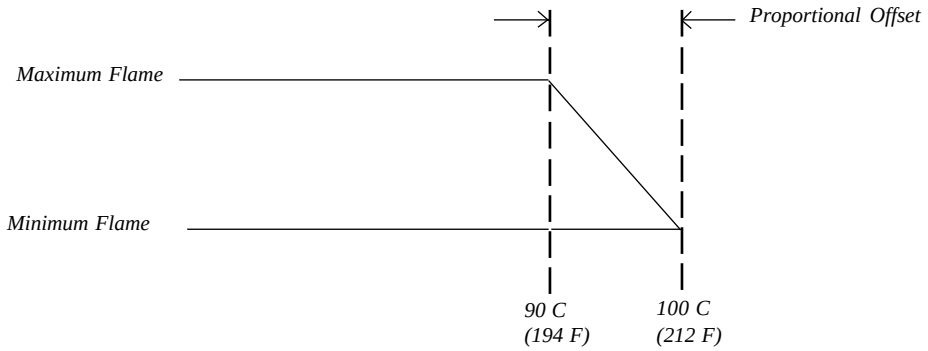 **Proportional band**: Value entered - Centigrade, Fahrenheit, Bar or p.s.i. depending on type of control sensor and display units selected (refer Options 1, 51 and 52).
		5-100 0.5-10.0	For Centigrade, Fahrenheit and p.s.i. selections, If Bar is selected.
7.	**60**		**Integral time**: Every n seconds 10% of the present offset from setpoint value is added or subtracted to the present proportional value. The value of n is set in this option. It is possible to set this Option to 'off'. If 'off' is selected there will be no integral action control. (Integral is equivalent to 'Reset')
		OFF-250	Seconds.
8.	**1**		**Number of Servo Motor Channels to be enabled**: Channel "1" is always enabled (Fuel Position Motor). Set Option 8 to the number of additional channels required (Minimum of 1) .
		1	Channels 1-2 In use.
		2	Channels 1-3 In use.
		3	Channels 1-4 In use

Option No.	Factory Setting	Option Value	Description
9	**1**		**CR1 Relay Operation**: The 'CR1' relay serves two purposes. To turn the burner off in the event of an M.M. system error and to effect a 'working' stat. There are three settings for this Option. The first keeps the 'CR1' relay closed all the time. In this instance, a 'working' stat must be fitted to the boiler. The second setting opens the 'CR1' relay at an offset above the Required value and closes it at an offset below the Required value. The third setting opens the 'CR1' relay at an offset above the Required value and closes it at an offset also above the Required value. The 'CR1' relay must always be fitted even if it is not used as a stat so that the burner will shut down in the event of an M.M. error. The following diagrams illustrate the 'CR1' relay operation. The offset values are set in Options 10 and 11.
		0	CR1 always closed.(must be set for external modulation, see Option 45)
		1	CR1 closes below Required value.
		2	CR1 closes above Required value.
			Option 9 = 1, example using 100 C (212 F). Required Value.
			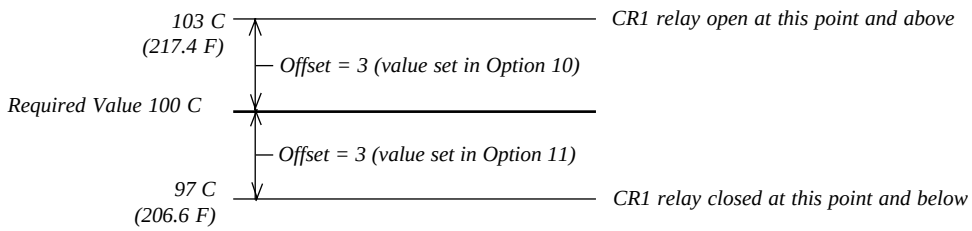
			Option 9 = 2, example using 100 C (212 F). Required Value.
			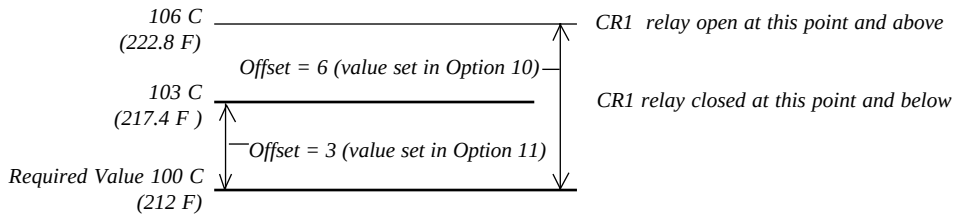
10.	**3**		**Offset above desired value at which CR1 relay opens:** (Only relevant if option 9.1 or 9.2 selected).
		2-50 0.2-5.0	If Centigrade, Fahrenheit or p.s.i. units effective. If Bar units effective.
11.	**3**		**Offset below/above desired value at which CR1 relay closes:** (Only relevant if option 9.1 or 9.2 selected).
		2-50 0.2-5.0	If Centigrade, Fahrenheit or p.s.i. units effective, If Bar units effective.

Option No.	Factory Setting	Option Value	Description
12.	**0**		**E.G.A. Options**: There are numerous E.G.A. Options, briefly they are as follows:- The E.G.A. is operational and the system trims. If the E.G.A. develops a fault, the system reverts to M.M. only operation. The system can be further optioned so that in the event of an E.G.A. error the 'CR' relay will open and stop the burner. If this type of option is set, the 'CR' relay will not close until the E.G.A. has cooled down to it's operating temperature. Further Options can be set which perform limit checks on the values that the E.G.A. measures. In the event of a limit being exceeded the system can revert to M.M. only operation, alternatively the 'CR' relay can be optioned to open. A last Option exists to enable an E.G.A. to give readings on the M.M. for just monitor purposes. i.e. the system is commissioned on M.M. only but E.G.A. values are displayed just for information. All Option values except 0 make the E.G.A. operational. If Options 5 or 6 are selected , refer to Options 19-27 to set limits to be tested for.
		0	E.G.A. not optioned.
		1	System reverts to M.M. only operation if E.G.A. error.
		2	'CR1' relay opens if E.G.A. error.
		3	Unused.
		4	Unused.
		5	Limits tested, system reverts to M.M. only operation if E.G.A. error or limit e x - ceeded.
		6	Limits tested, 'CR' relay opens if E.G.A. error or limit exceeded.
		7	System commissioned on M.M. only, E.G.A. used as monitor.
13.	**0**		**Restore Factory Settings:** To set all Options back to their original factory set values, set Option 13 value to 26 and press enter.
		0-30	
14.	**0**		**Twin Burner Systems :** Twin Burner Operation enables two burners to run at the same time and with equal input. 14=1 The burners are identified with identification numbers e.g. 1 and 2 (See Option 33). If one of the burners develops a fault, then both burners are shut down. Only one load detector is required, this is connected to the odd numbered burner. 14=2. One or the other burner can be fired independently. If they are fired at the same time they synchronise together. Load detectors are required on both units. **N.B.** The Burner Control Circuit inputs and low position proving signals (T84 outputs) may have to be cross coupled depending on the application.
		0	Normal single burner operation.
		1	Twin Burner Operation - Both burners always fire together.
		2	Twin Burner Operation - Burners can run individually or together.
15.			**Unused.**

Option No.	Factory Setting	Option Value	Description
16.	**0**		**Sequencing/DTI:** If Option 16 is set to values 1 or 3, then this M.M. will respond to sequencing commands (See section on Sequencing). A lead boiler can be selected by connecting line voltage to terminal 88 of the appropriate M.M.. Only 1 M.M. may be selected at a time or the sequencing will not operate. Alternatively the lead boiler can be selected via the D.T.I. For this to be effective all the M.M.s on the system must have terminal 88 volt free.
		0	No sequencing.
		1	Sequencing enabled.
		2	Setpoint & enable/disable commands accepted from D.T.I.
		3	Both of 1 & 2.
17.	**0**		**NO & CO displayed when running on oil:** If fuel 2,3 or 4 are selected, then the displaying of CO & NO can be on or off. This Option is only relevant if an E.G.A. is operational on the system.
		0	NO & CO display always zero.
		1	NO & CO is displayed normally.
18.	**1**		**Carry forward of Trim:** When the system modulates, the correction that may be existing on the air damper position can be carried forward. Only air plus correction is carried forward. This Option is only relevant if an E.G.A. is operational on the system.
		0	No carry forward of trim.
		1	Trim carried forward.
19.	**0**		**Upper offset limit % O_2.** **E.G.A. Limits:** Options 19-27 are only relevant if an E.G.A. is operational on the system. Option 12 value 5 or 6 must be selected if any of the following limit checks are to be invoked. To enable the checking of a particular limit, make the value of the appropriate Option a non-zero value. The amount of 'limit offset' is specified by the value entered. e.g. If the 'upper limit offset O_2' is to be enabled and the value of the offset is 2.0%, then enter the value of 2.0 for Option No. 19.
		0-10.0	% O_2.
20.	**0**		**Upper offset limit % CO_2.**
		0-10.0	% CO_2
21.	**0**		**Upper offset limit ppm CO**
		0-200	ppm CO
22.	**0**		**Lower offset limit % O_2**
		0-10.0	% O_2

Option No.	Factory Setting	Option Value	Description
23.	**0**		**Lower offset limit % CO_2**
		0-10.0	% CO_2
24.			**Unused.**
25.	**0**		**Absolute value % O_2** .(System checks for O_2 values lower than value specified in this Option).
		0-20.0	% O_2
26.	**0**		**Absolute value % CO2. (System** checks for CO_2 values higher than value specified in this Option).
		0-20.0	% CO_2
27.	**0**		**Absolute value ppm CO.** System checks for CO readings higher than value specified in this Option.
		0-200	ppm CO
28.	**20**		**Trim threshold:** This option is only relevant if an E.G.A. is operational on the system. The value set in this Option is subtracted from the operator set "Required" value. If the Actual value is less than the result then no Trim action will be effected. If the trim is to be effective all the time then set the value to zero. Must also be set to O for the EGA to operate when external modulation is optioned.
		0-50	If Centigrade, Fahrenheit or p.s.i. units effective.
		0-5.0	If Bar units effective.
29.	**1**		**Golden Start:** NB. Must be entered on each fuel individually if more than one fuel is commissioned. See section 2.14.12 and parameter 15.
		0	Golden Start operates.
		1	Golden Start does not operate.
30.	**50**		**D.T.I. - Required Value Minimum Limit:** If the system is being used with a D.T.I. a maximum and minimum limit for the Required value must be set. The M.M. will only act on values within the limits set. If a value is received from the D.T.I., that is outside these limits, it will be ignored and the system uses its previous Required value. Practical range is limited to range of sensor selected.
		5-995	If Centigrade, Fahrenheit or p.s.i. units effective.
		0.5-99.5	If Bar units effective.
31.	**100**		**Maximum Limit.**
		5-995	If Centigrade, Fahrenheit or p.s.i. units effective.
		0.5-99.5	If Bar units effective.

Option No.	Factory Setting	Option Value	Description
32.	**20**		**Trim Delay:** After ignition the sampling system does not sample for the period of time set in this option. (Only relevant if E.G.A. is operational on system). This allows for the boiler to warm up and combustion to stabilise before sampling commences.
		0-250	Period (seconds) after ignition no sampling takes place.
33.	**1**		**MM Identification No. -** Sequencing Options: If this M.M. is configured as part of a sequencing system and/or required to communicate with a D.T.I. then the following three options must be set: The first is an identification number for this M.M.. The second is the rating of the burner, and the third is the "sequencing scan time". Refer to Sequencing Section for further explanation.
		1-10	Identification Number.
34.	**5**		**Rating of burner**
		1-999	See option 77 for units.
35.	**10**		**Sequence Scan Time. (minutes)**
		1-100	Sequence Scan time (Minutes).
36.	**0**		**E.G.A. Sensor Selection:** Available when using an E.G.A. System fitted with NO/SO_2 sensors. The following option is for selecting the type of Sensor required: Part No. EGA20005 for NO; EGA20006 for SO_2. (See also option 17, configure EGA pinch valves as required - see section 3).
			SO_2 NO
		0	Off Off
		1	Off On
		2	On Off
		3	On On
37.	**0**		**Time Between Readings**
			Explanation of D. (Derivative Action): The user adjustable control variables to set up the D action are as detailed below. (Derivative is equivalent to 'Rate')
		0	(0=off)
		1-200	Seconds. The time interval between the controller comparing Actual and Required Setpoint values.
38.	**2**		**Deadband.** The Deadband is the margin above and below the Setpoint within which no derivative control action occurs.
		0-15	If Centigrade, Fahrenheit or PSI units optioned.
		0-1.5	If Bar units optioned.

Option No.	Factory Setting	Option Value	Description
39.	**10**		**Response Sensitivity.**
		1-100	%
			The Sensitivity Number indicates the amount of percentage firing rate increase or decrease that is inflicted by the Derivative action; e.g. If the chosen value was 10% then 10% of the maximum firing rate would be added to the existing rate of fire; i.e.: If the burner were firing at 50% load and the derivative action was triggered the firing rate would increase by 10+50 to 60%. The following is an example of the above control philosophy in action: Note: "Time Between Readings" set to 20 seconds. "Deadband" set to 2°C (2°F.) "Response Sensitivity" set to 10%. Setpoint Information: "Required" set to 90°C (190°F.) "Actual" reads 86°C (186°F.) Firing Rate Information: Burner firing at 50% of capacity. In the example situation there has been 4°C (4°F) drop in temperature below the "Required" value. The Deadband is set at 2°C (2°F.), therefore the Derivative action will be triggered as the deviation from Setpoint is in excess of 2°C (2°F.). In this example 10% will be added to the 50% firing rate resulting in an increase in firing rate to 60% of capacity. The "Time Between Readings" is set for 20 seconds and if after this time interval the "Actual" reading is not within the 2°C (2°F) deviation from "Required" Deadband another 10% would be added to the 60% firing rate which would result in a 70% firing rate. By careful selection of "Time Between Readings" "Deadband" and "Response Sensitivity" an ideal response to rate of change over time can be configured. The control philosophy detailed operates inversely if the "Actual" temperature exceeds the Setpoint and is outside the "Deadband". To enable or switch on the Derivative action the "Time Between Readings" must be set in excess of 10 seconds.
40.	**0**		**Warming Facility for Low Pressure Steam IBS.** For applications without a non return valve, IBS Warming will not operate on reduced setpoint. The facility exists to install a thermostat in the boiler shell, and an input on Terminal 93 initiates Warming. (See option 41). Note: Phantom Setpoint is not effective when this option is enabled, only burner on/off applies (See options 53/54).
		0	Disabled
		1	Enabled

Option No.	Factory Setting	Option Value	Description
41.	**0**		**Steam Boiler Sequencing** Options 41, 42, 43 and 44 are related to the "Standby Warming" Sequencing state. Option 42 enables an offset to be set relative to the Required value to generate a "phantom setpoint". During this "Standby Warming" operation the Boiler Control Circuit relay operates on the phantom setpoint. Options 43 and 44 are offset values above and below the phantom setpoint (i.e. Options 10 and 11 are not used for the phantom setpoint Boiler Control Circuit relay offsets). When a boiler is set to the "Standby Warming" state, by the M.M. Sequencing commands, it runs for a period of time at low flame and then off for a period. This action keeps the boiler warm. Option 53 sets the time interval that the burner is Off: Option 54 sets the time that the burner is On. If Option 41 = 0 only one boiler will be set to the "Standby Warming" state. Boilers further down the sequence will be set to the "OFF" state. In this case Options 53 and 54 set the ON and OFF time. (If Options 41 and 53 are 0 then Hot Water Sequencing is implemented).
		0	3 State Steam Sequencing. ON, STANDBY, OFF...
		1	2 State Steam Sequencing. ON, STANDBY, STANDBY...
			If option 1 is set to 6 (Boiler pressure sensor type MM10008) and PSI units are selected, low pressure steam IBS will cut in automatically if the required value is set lower than 20psi.
42.	**20**		**Phantom Setpoint.** Offset below normal Required value. Note: When phantom setpoint is in effect, burner is held at low flame.
		0-100	If Centigrade, Fahrenheit or p.s.i. units effective.
		0-10.0	If Bar units effective.
43.	**5**		**Offset above phantom setpoint when Boiler Control Circuit opens.**
		2-50	If Centigrade, Fahrenheit or p.s.i. units effective.
		0.2-5.0	If Bar units effective.
44.	**5**		**Offset below phantom setpoint when Boiler Control Circuit closes.**
		2-50	If Centigrade, Fahrenheit or p.s.i. units effective.
		0.2-5.0	If Bar units effective.
45.	**0**		**External Modulation:** If this option is enabled, the usual P.I.D. control is disabled and the percentage of firing is set by an external controller applied to the appropriate input (terminals 7,8 & 9). This can be 0-10V, 2-10V, 0-20mA or 4-20mA representing low to high fire. See Parameter 69. The 10 point flow metering calibration must be entered for correct operation. See Option 57. Typically a working stat and a high limit stat would need to be fitted, However if option 46 is set to 0 the internal working stat facility of the MM can be used. Note: A high limit stat must be used regardless.
		0	Disabled
		1	Enabled - input from auxilliary analogue input

Option No.	Factory Setting	Option Value	Description
46.	**0**		**Actual value displayed during External Modulation.** Load sensor input required to display Actual value.
		0	Required and Actual values displayed
		1	Required and Actual values not displayed
47.	**0**		**Cold Start Routine.** If the boiler temperature/pressure is at or below 30% of the target pressure/temperature then the burner would be held at low flame. If the boiler is at or below 60% of its target temperature/pressure then the burner firing rate would be held at 50% firing. When the boiler temperature/pressure exceeds the P Band offset in the PID philosophy then the burner would revert to normal PID load control.
		0	Off
		1	On
48.	**0**	0-120	**Flue Gas Recirculation - Timer.** This is the time that the MM elements (positioning motors/ac drives) are held at the FGR positions, after which modulation then takes place.
49.	**0**	0-50	**Flue Gas Recirculation - Offset.** This is an offset from the required value. The FGR positions are held until such time that the actual value reaches the offset value.
50.	**0**		**Flue Gas Recirculation - Flue Gas Temperature.**
		0	Not optioned.
		1	Optioned. The FGR positions are held until such time as the flue gas temperature has reached 120°C. (An EGA must be present and optioned).
51.	**0**		**Units of Temperature**. NB. When changing units adjust all other relevant options respectively.
		0	All temperature readings displayed in Celsius.
		1	All temperature readings displayed in Fahrenheit.
52.	**0**		**Units of Pressure.** NB. When changing units adjust all other relevant options respectively.
		0	All pressure readings displayed in Bar.
		1	All pressure readings displayed in p.s.i.
53.	**1**		**Steam Boiler Sequencing Burner Off Time:** The steam boiler type sequencing is enabled by setting Option 1 to a respective pressure sensor. Options 42, 43 and 44 are relevant to the "Standby" boiler operation.
		1-200	Burner "Off" time (minutes) during warm up cycle. (Intelligent Boiler Sequencing. Steam boiler applications).
54.	**5**		**Burner 'On' Time**
		1-30	Burner "On" time (minutes) during warm up cycle. (Intelligent Boiler Sequencing. Steam boiler applications).

Option No.	Factory Setting	Option Value	Description
55.	**0**		**Internal PID/External Modulation Selectible using terminal 88.** (Cannot be used with Sequencing/IBS)
		0	Normal operation. (Internal PID)
		1	Terminal 88 = 0 V - internal PID. Terminal 88 = Line Voltage - External Modulation, CR1 always closed.
56.	**1**		**Operation of Alarm Output for MM and EGA errors, Terminal No 79., NB this is a switched neutral and not a voltage output terminal:**
		1	Relay normally Off, On when Alarm.
		2	Relay normally On, Off when alarm.
57.	**0**		**Flow Metering:** If the Air window shows 57 and the Required window shows 1 when ENTER is pressed to store the Options then the 10 point calibration procedure will be invoked the next time the burner starts.
		0	No Flow Metering.
		1	Flow Metering Operates.
		2	Totalised Flow Metering reset to zero for fuel selected
58.	**15**		**Flow Metering Calculation Delay.** Number of seconds from ignition to flow metering calculation starts.
		0-60	Seconds. Option 58 does not apply to the Mk6 Evolution unless an external flame safeguard is being used.
59.			**Unused.**
60.	**0**		**Hand/Auto Bumpless Transfer Operation.**
		0	Fuel valve goes directly to last set Hand position.
		1	Hand position (taken on present fuel valve position when changing from Auto to Hand operation).
		2	As 0, but Hand position is not stored in permanent memory.
61.	**1**		**Flow metering units fuel 1 - Gaseous**
		0	Cubic feet
		1	Cubic meters
		2	Kilograms
		3	Litres
		4	US gallons
62.	**3**		**Flow metering units fuel 2 - Liquid**
		0	Cubic feet
		1	Cubic meters
		2	Kilograms
		3	Litres
		4	US gallons

Option No.	Factory Setting	Option Value	Description
63.	**3**		**Flow metering units fuel 3 - Liquid**
		0	Cubic feet
		1	Cubic meters
		2	Kilograms
		3	Litres
		4	US gallons
64.	**1**		**Flow metering units fuel 4 - Gaseous**
		0	Cubic feet
		1	Cubic meters
		2	Kilograms
		3	Litres
		4	US gallons
65-66.			**Unused.**
67.	**1**		**Purge Position:** The following Options tell the M.M. which channels are to be included in the Purge sequence. (See Option 5 for Purge Position).
		0	Channel 1 to Purge position.
		1	Channel 1 to remain closed for Purge.
68.	**0**		**Channel 2 Purge position.**
		0	Channel 2 to Purge position.
		1	Channel 2 to remain closed for Purge.
69.	**0**		**Channel 3 Purge position.**
		0	Channel 3 to Purge position.
		1	Channel 3 to remain closed for Purge.
70.	**0**		**Channel 4 Purge position.**
		0	Channel 4 to Purge position.
		1	Channel 4 to remain closed for Purge.
71.	**0**		**Fuel 1 - Fuel type.**
		0	Natural gas
		3	Fuel 1
			Do not use any other values.
72.	**1**		**Fuel 2 - Fuel type.**
		1	Light Distillate Oil
		2	Heavy Fuel Oil
		3	Fuel 2
			Do not use any other values.
73.	**1**		**Fuel 3 - Fuel type.**
		1	Light Distillate Oil
		2	Heavy Fuel Oil
		3	Fuel 3
			Do not use any other values.

	Option No.	Factory Setting	Option Value	Description
	74.	**0**		**Fuel 4 - Fuel type.**
			0	Natural gas
			3	Fuel 4
				Do not use any other values.
	75.	**0**		**Purge Motor Travel Speed:** During a Purge Sequence the Motor Travel Speed can be set independent of Option 2. This affects all selected channels.
			0 -100	0 = Quickest time,
				100 = Slowest time.
	76.	**0**		**Trim Channel.** If EGA is optioned, the trim can be applied to either Channel 2 (positioning motor) or Channel 5 (VSD). If trim on channel 5 is used, options 91 to 97 must be entered correctly.
			0	Trim on Channel 2
			1	Trim on Channel 5
	77.	**0**		**Burner Rating Units.** Display purposes only for Flow Metering.
			0	KW x 100 /hr **6 Btu x 1000 /hr
			1	Kg x 100 /hr **7 Hp x 10 /hr
			2	MW /hr **8 lbs x 1000 /hr
			3	Btu x 100 /hr
			4	Hp x 100 /hr
			5	lbs x 100 /hr
	78			**Unused.**
**	**79.**	**0**		**Lowest required value.**
			0-995	Minimum required value allowed when O.T.C. optioned.
				(see option 80)
				Point A, see diagram on section 2.14.2.8.1.
**	**80.**	**0**		**Outside temperature compensation.**
			0	Disabled
			1	Enabled
				Note: A line voltage on Terminal 93 invokes a 'Night Setback' offset value, see option 85.
**	**81.**	**140**		**Maximum boiler required setpoint at minimum outside temperature.**
			50-999	Value limited in accordance with sensor selected by option 1.
				Point B, see diagram on section 2.14.2.8.1.
**	**82.**	**-30**		**Minimum outside temperature.**
			-40 +40	For Centigrade
			-40 +104	If Fahrenheit
				Point C, see diagram on section 2.14.2.8.1.

Options marked ** are new to the Mk6 Evolution MM.

	Option No.	Factory Setting	Option Value	Description
**	**83.**	**65**		**Minimum boiler required setpoint at maximum outside temperature.**
			50-999	Value limited in accordance with sensor selected by option 1.
**	**84.**	**30**		**Maximum outside temperature.**
			-20 +40	For Centigrade
			-4 +104	If Fahrenheit
				Point D, see diagram on section 2.14.2.8.1.
**	**85.**	**10**		**Night Setback 'depression' offset value.**
				This offset is subtracted from the normal required value and activated by a line voltage on terminal 93.
			0-999	degrees/pressure
	86.	**0**		**Channel 1 Softened Error checking Select -** increases positioning error fom 0.1° to 0.5° for Industrial motor
			0	CH1 normal positioning motor.
			1	CH1 industrial positioning motor/softened error checking.
	87.	**0**		**Channel 2 Softened Error checking Select .**
			0	CH2 normal positioning motor.
			1	CH2 industrial positioning motor/softened error checking.
	88.	**0**		**Channel 3 Softened Error checking Select.**
			0	CH3 normal positioning motor.
			1	CH3 industrial positioning motor/softened error checking.
	89.	**0**		**Channel 4 Softened Error checking Select .**
			0	CH4 normal positioning motor.
			1	CH4 industrial positioning motor/softened error checking.
	90.	**0**		**VSD Operation channel 5**
			0	Not optioned
			1	Optioned
	91.	**0**		**Output from MM to VSD**
			0	Output units displayed as 4-20 milliamps
			1	Output units displayed as 0-10 volts
			2	Output units displayed as hertz
	92.	**25**		**Output low speed from MM to VSD.** (Same value as set on the VSD)
			1-200	Hertz
	93.	**50**		**Output high speed from MM to VSD.** (Same value as set on the VSD)
			1-200	Hertz
	94.	**2**		**Input signal to MM from VSD.**
			0	4-20 milliamps
			1	0-10 volts
			2	0-20 milliamps

Options marked ** are new to the Mk6 Evolution MM.

Option No.	Factory Setting	Option Value	Description
95.	**0**		**Input units displayed as -**
		0	selected input signal
		1	Hertz
96.	**0**		**Input low speed to MM from VSD.** (Same value as set on the VSD)
		0-200	Hertz
97.	**50**		**Input high speed to MM from VSD.** (Same value as set on the VSD)
		0-200	Hertz
98-99			**unused**
100.	**0**		**VSD Operation channel 6**
		0	Not optioned
		1	Optioned
101.	**0**		**Output from MM to VSD**
		0	Output units displayed as 4-20 milliamps
		1	Output units displayed as 0-10 volts
		2	Output units displayed as hertz
102.	**25**		**Output low speed from MM to VSD.**(Same value as set on the VSD)
		1-200	Hertz
103.	**50**		**Output high speed from MM to VSD.**(Same value as set on the VSD)
		1-200	Hertz
104.	**2**		**Input signal to MM from VSD.**
		0	4-20 milliamps
		1	0-10 volts
		2	0-20 milliamps
105.	**0**		**Input units displayed as -**
		0	selected input signal
		1	Hertz
106.	**0**		**Input low speed to MM from VSD.** (Same value as set on the VSD)
		0-200	Hertz
107.	**50**		**Input high speed to MM from VSD.** (Same value as set on the VSD)
		0-200	Hertz
108-109.			**Unused**
110.	**1**		**Burner control.**
		0	External Flame safeguard.
		1	Internal - Standard Scanner
		2	Internal - Self-check Scanner

	Option No.	Factory Setting	Option Value	Description
	111.	**0**		**Pilot**
			0	Interrupted pilot
			1	Intermittant pilot (expanding flame)
	112.	**40**		**Pre purge time**
			20-100	Seconds
	113.	**3**		**Pre ignition time.** Time ignition transformer is on before pilot gas valve opens.
			3-5	Seconds
	114.	**3**		**First safety time.** Time pilot valve is open before UV is checked.
			3-10	Seconds
	115.	**3**		**Pilot prove time. (Pilot trial for ignition PTFI)**
			3-5	Seconds
	116.	**3**		**Fuel 1 & Fuel 4 (Gas Programs) Second safety time (Main trial for ignition MTFI).**
				Pilot/Main valve overlap.
				(Not Applicable to expanding flame - see option 111)
			3-10	Seconds
	117.	**5**		**Main flame prove time.**
				Time period from pilot valves closing to burner modulating - delay to modulation
			5-20	Seconds
	118.	**0**		**Post purge time**
			0-100	Seconds (0 - No post purge)
	119.	**10**		**Control Box Recycle time.** Time delay from burner shut down to startup.
			3-120	Seconds
	120.	**10**		**UV Threshold**
			5-50	Minimum Flame Signal Strength during pilot. (At all other times UV threshold is fixed at 5).
	121.	**5**		**Delay from start of pre-purge after which air switch checked**
			5-10	Seconds
**	**122.**	**0**		**Flame Switch Operation.** If this option is enabled Terminals 85/86 are used in conjunction with a flame switch to monitor the presence of a flame.
			0	Disabled - normal UV scanner operation
			1	Enabled - flame switch operation
	123.	**3**		**Fuel 2 & Fuel 3 (Oil programs) Second safety time (Main trial for ignition MTFI).**
				(Not Applicable to expanding flame - see option 111)
			3-15	Seconds

Options marked ** are new to the Mk6 Evolution MM.

Option No.	Factory Setting	Option Value	Description
124.	**1**		**Gas Valve Proving Pressure Sensor Type.**
		0	Nominal range 0-25" w.g./ 0-65 mbar/ 0-1 psi
			NB. PSI display not available with this sensor (Sensor MM60006)
		1	Nominal range 0-135"w.g./ 0-340 mbar/ 0-5 psi (Sensor MM60008)
		2	Nominal range 0-300"w.g./ 0-750 mbar/ 0-11 psi (Sensor MM60011)
		3	Nominal range 0-550"w.g./ 0-1380 mbar/ 0-20 psi (Sensor MM60012)
125.	**0**		**Gas Valve Proving/Oil High-Low Pressure Limit Checked- Fuel 1**
		0	Not checked on Fuel 1
		1	Gas Valve Proving on + High/Low Pressure Limits (See Options 136 & 137)
		2	Do not select
		3	Gas High/Low pressure Limit (If OP. 136/137 set to 0, online values displayed only)
126.	**0**		**Gas Valve Proving/Oil High-Low Pressure Limit Checked - Fuel 2**
		0	Not checked on Fuel 2
		1	Do not select
		2	Oil High/Low pressure Limit (If OP. 139/140 set to 0, online values displayed only)
		3	Do not select
127.	**0**		**Gas Valve Proving/Oil High-Low Pressure Limit Checked - Fuel 3**
		0	Not checked on Fuel 3
		1	Do not select
		2	Oil High/Low pressure Limit (If OP. 139/140 set to 0, online values displayed only)
		3	Do not select
128.	**0**		**Gas Valve Proving/Oil High-Low Pressure Limit Checked - Fuel 4**
		0	Not checked on Fuel 4
		1	Gas Valve Proving on + High/Low Pressure Limits (See Options 136 & 137)
		2	Do not select
		3	Gas High/Low pressure Limit (If OP. 136/137 set to 0, online values displayed only)
129.	**0**		**VPS Operation.**
		0	VPS operates before burner start up.
		1	VPS operates after burner run.
			This option must be set to 0 during commissioning. Once commissioning is complete it can then be set to 1.
130.	**2**		**Gas Valve Proving**
		0	Two valve Gas Valve Proving
		1	Three valve Gas Valve Proving . Vent valve normally closed
		2	Three valve Gas Valve Proving . Vent valve normally open
131.	**0**		**Gas Pressure Units. NB** PSI not available for MM60006 - see Option 124.
		0	"wg (inches water gauge)
		1	mbar (millibars)
		2	psi (pounds per square inch) - units displayed to 2 decimal places.
132.	**20**		**Gas Valve Proving time.**
		10-30	Seconds

Option No.	Factory Setting	Option Value	Description
133.	**0.5**		**Maximium pressure change allowed during proving time. Note** Option 124 for Pressure Sensor range in use, default value will change accordingly. See Section 2.14.2.6.2
		0.1-5	"wg/ 0.2-12.4mbar/ psi not available (Sensor MM60006)
		0.5-25	"wg/ 1.1-63 mbar/ 0.02 - 0.91 psi (Sensor MM60008)
		1-56	"wg/ 2.5-140 mbar/ 0.04 - 2.03 psi (Sensor MM60011)
		1.9-103	"wg/ 4.6-356 mbar/ 0.07 - 5.16 psi (Sensor MM60012)
134.	**3**		**VPS Valve Opening Time.**
		3-10	Seconds
135.			**Unused**
136.	**1.0**		**Gas Pressure Switch - Lower Limit.** This option has two functions: - Static Inlet Pressure Check - Lower Limit. This is checked prior to Burner Firing. - Run Pressure Check - Lower Limit Note settings of options 124 & 131
		0	off - lower limit not checked
		0.1-5	"wg/ 0.2-12.4mbar/ psi not available (Sensor MM60006)
		0.5-25	"wg/ 1.1-63 mbar/ 0.02 - 0.91 psi (Sensor MM60008)
		1-56	"wg/ 2.5-140 mbar/ 0.04 - 2.03 psi (Sensor MM60011)
		1.9-103	"wg/ 4.6-356 mbar/ 0.07 - 5.16 psi (Sensor MM60012)
137.	**1.0**		**Gas Pressure Switch - Upper Limit.** Note settings of options 124 & 131
		0	off - Upper limit not checked
		0.1-5	"wg/ 0.2-12.4mbar/ psi not available (Sensor MM60006)
		0.5-25	"wg/ 1.1-63 mbar/ 0.02 - 0.91 psi (Sensor MM60008)
		1-56	"wg/ 2.5-140 mbar/ 0.04 - 2.03 psi (Sensor MM60011)
		1.9-103	"wg/ 4.6-356 mbar/ 0.07 - 5.16 psi (Sensor MM60012)
138.	**0**		**Oil Pressure Units.**
		0	Bar
		1	PSI
139.	**1.0**		**Lower Limit Oil Pressure Switch**
		0	off - lower limit not checked
		0-3.5	bar - Lower limit from operating pressure
		0-50	psi - Lower limit from operating pressure
140.	**1.0**		**Upper Limit Oil Pressure Switch**
		0	off - Upper limit not checked
		0-3.5	bar - Upper limit from operating pressure
		0-50	psi - Upper limit from operating pressure

	Option No.	Factory Setting	Option Value	Description
**	**141.**	**0**		**Purge Air Pressure Proving.** During pre purge this option enables the air proving pressure to be tested at a value independent of option 149. Option 148 must be set. (If option 141 is set without option 148 a lockout will be set when the system starts to purge. The lockout message displayed warns that option 141 is incorrectly set.)
			0	off - No purge air pressure proving
			0.1-27	“wg
			0.1-67	mbar
	142-144.			**unused**
	145.	**0**		**Autoflame Air pressure Sensor**
			0	Autoflame Air pressure sensor not optioned
			1	Autoflame Air pressure sensor optioned
	146.	**0**		**Air pressure units**
			0	"wg. (inches water gauge)
			1	mBar. (millibar)
	147.	**0**		**Air Sensor Error Checking Window.** Only active during modulation - ERR 82
			0	No error checking
			0 - 3	"w.g.(max. = +/- 3 "w.g.)
			0 - 7.5	mbar. (max. = +/- 7.5 mbar)
	148.	**0**		**Autoflame Air Proving Selected**
			0	Not used - requires external Air Proving switch on terminal 54.
			1	Air proving - requires Autoflame Air Pressure Sensor.
			2	As 1 but terminal 54 also used if Fuel 2 selected.
	149.	**0.3**		**Minimum air pressure proving value.** (Air pressure switch function)
			0.4 - 5	" w.g.
			1 - 12.5	mbar
	150.	**0**		**Clear ALL Commissioning Data**
			0 - 10	Range
			5	Clear Commissioning Data - restore Options/Parameters to factory settings.

For safety reasons options 110 to 150 also have to be entered in as parameters.
It is the Commissioning Engineer's responsibility to ensure all settings are in accordance with the appropriate standards.

Options marked ** are new to the Mk6 Evolution MM.

2.14.2.5 Parameters

To Select Parameter Mode.
Ch1, Ch2, Ch3 refer to the rows of buttons respectively starting with CH1 at the top.

Parameter values can be changed by entering the Parameter mode. The password must first be entered. To enter the password follow the steps listed:

Either deselect and then select fuel or power down and then up.

If system is already commissioned, press COM before the COM l.e.d. stops flashing.

If system is not already commissioned, commissioning mode will be set automatically.

“ENTER PASSWORD” is displayed.

Use the CH1 and CH2 to set the Password codes. Then press OPEN CLOSE simultaneously.

The 'SET PARAMETERS' screen will then be displayed.

To change the parameter number use the CH2 buttons.

To change the value use the CH3 buttons.

Any number of Parameter values can be changed when in Parameter mode.

When changes have been made press ENTER MEMORY

All new Parameter values are then permanently stored.

Parameters marked ** are new to the Mk6 Evolution MM.

Parameter No.	Factory Setting	Parameter Value	Description
1	3	0-20	Sequencing - Offset value when unit goes off line ie. If the Standby Boiler fails to start the scan time will be decreased by 3 minutes ie. if 10 minute scan reduced to 7 minute scan.
2	1	1-10	Sequencing - Time between data requests (seconds). Bus driver request info every second, M.M's transmit every second, DTI only listens to Transmissions.
3	1	1-10	Sequencing - Number of boilers initially set on after powerdown.
4	45	5-100	E.G.A. -Seconds ENTER button disabled after E.G.A. pressed
5	4	1-50	Sequencing -Number of minutes ,time out value to reach modulation, ie. If Boiler is not Modulating after being asked to contribute to load, it is kicked out of sequence loop, after being asked to modulate, must modulate in 4 minutes.
6	60	5-100	MM - Test time for Burner Control Relay (seconds).ie. If Terminal 85 signal still present after 60 seconds from turning off then = ERROR 40.
7			unused
8	30	5-240	E.G.A. - Delay after draining before trim cycle start ie. Wash out period, When cells being cleaned with air, this value maintains the last readings until the air sampled during the drain period has gone.
9	60	5-240	E.G.A. - Auto commission time
10			unused
11	25	5-60	Air flush time during Auto Commission - (Seconds).
12	0	0-1	E.G.A. - CO included in trim calculation on F2 & F3 (See Option 17). 0 - no 1 - yes i.e Required when running gas on F2 or F3.
13	20	5-30	E.G.A. - DO NOT ADJUST
14	20	1-100	E.G.A. - DO NOT ADJUST
15	5	2-100	Number of seconds positioning motors are held at "choke" position. (Applies to Golden Start only, see option 29)
16	12	1-50	Time between calibrations, (÷ 2 = Hours) Calibrates every 6 hours if burner does not turn off.
17	3	0-10	E.G.A. - Number of trims before error flagged when limits exceeded. (each Trim = 30 Seconds)

Parameter No.	Factory Setting	Parameter Value	Description
18	20	5-30	E.G.A. - DO NOT ADJUST
19			unused
20	0	0-40	Set value to 26 press enter to restore all preset factory settings.
21	0		E.G.A. - Present values display update rate.
		0	Each trim,
		1	Every second.
22	0		DTI - DO NOT ADJUST
23			unused
24	120	20-240	E.G.A. - Calibration time - seconds
25	30	5-100	E.G.A. - Time between samples
26	8	1-20	E.G.A. - Number of samples per trim cycle
27	25	0-255	E.G.A. - Minimum Operating Temp. (÷ 5=deg C)
28	200	0-255	E.G.A. - Maximum Operating Temp. (÷ 5=deg C)
29			unused
30	20	0-20	Filters Load Sensor Readings(Temp. & Pressure) 0 - No Filtering. 20 - Max. Filtering.
31	0	0-1	Selects Efficiency to be displayed - 0 - English (USA/Canada)(incorporates Hydrogen & moisture loss) - 1 - European
32-37			unused
38	254	0-255	MM - password fuel
39	1	0-255	MM - password air
40-43			unused
44	0.4	0-4.0	E.G.A. - O_2 window inside which no further trim takes place.
45	0.2	0-2.0	E.G.A. - CO_2 window inside which no further trim takes place.
46	21	2-100	MM - Delay from ignition to modulation when using an external Flame Safe guard. Number of seconds burner is held at low flame/start position.
47-48			unused

Parameter No.	Factory Setting	Parameter Value	Description
49	0	0-1	Set to 1 if required value not to be stored permanently in memory.
50-57			unused
58	1	0-1	1 - E.G.A. Calibration on Start up. 0 - E.G.A. No Calibration on Start up.
59		Unused	
60	0	0 - 1	0 - Normal EGA Operation 1 - O_2 Trim Interface Operation.
61	900	0 - 999	Display Backlight on time. (= seconds)
62		Unused	
63	0	0 - 1	Set to 1 for 2 seconds, then set back to 0 to clear lockout history.
64	0	0 - 1	Set to 1 for 2 seconds, then set back to 0 to reset totalised fuel metering values for all 4 fuels.
65	0	0 - 1	Set to 1 for 2 seconds, then set back to 0 to reset burner history.
66-68		Unused	
69	0	0 - 1	0 - External Modulation input range 0-20mA, 0-10V 1 - External Modulation input range 4-20mA, 2-10V
70	0	0 - 20	Filtering of Analogue input, terminals 7,8,9. 0 - default value of 5 1 - minimum 20 - maximum The value set is the number of readings over which an average is taken, the smaller the setting the quicker the response time.
71	0	0 - 20	Resolution of Analogue input, terminals 7,8,9. 0 - default value of 5 1 - minimum 20 - maximum. The effect of resolution is to filter noise on the input which causes hunting as the MM responds to a changing signal.

	Parameter No.	Factory Setting	Parameter Value	Description
**	72	0		External Required value.
			0	Disabled
			1	Enabled
				If enabled, Analogue Input terminals 7, 8, 9 are used to set the required value. Input signals can be 0-10/2-10V or 0-20/4-20mA. See parameters 69, 70 & 71. Range of required value is set by options 30 & 31. Set parameter 49 to 1.
	73-79			Unused
	80	40	1 - 50	Do Not Adjust
	81-82			Unused
	83			Display Diagnostic values
			0	Disabled
			1	Enabled
	84			Unused
	85	0	0-250	Modulation Exerciser. Repeatedly run between high and low flame. The higher the value, the longer the high/start position is maintained.
	86	0	0 - 100	IBS change down threshold. If left at 0 change down threshold = 85% firing rate.
	87	0	0 - 100	IBS change up threshold. If left at 0 change up threshold = 95% firing rate. NB: If Parameter 86 is set greater than 87 then they will default to 85% and 95% respectively.
	88	0	-50 - +50	Used to adjust errors in the OTC sensor reading. 0 - no adjustment made. each unit - 1°F or 0.5°C (see option 51 for units of temperature). If actual reading is too high set a negative value to adjust, if reading is too low set a positive value.
	89	0		Unused
	90	0		Flue Gas Recirculation
			0	Positions entered during commissioning.
			1	Positions entered after commissioning.
	91	0		Unused

Parameters marked ** are new to the Mk6 Evolution MM.

	Parameter No.	Factory Setting		Description
	92	0		Boiler Differential Pressure Proving
			0	Disabled.
			1	Enabled. The system will be held in a purge condition until a proven input from a differential pressure switch is registered on Terminal 85. Terminal 85 must be reset before start up can take place. If Terminal 85 resets during purge, the system returns to the beginning of the start up sequence.
	93			Unused
**	94	0		Upper offset limit ppm NO
			0-200	ppm NO
	95	0		
**	96	0		Upper offset limit Exhaust Temperature
			0-999	°C/F
**	97	0		Absolute value Exhaust Temperature. System checks for Exhaust Temperature readings higher than value specified in this Option.
			0-999	°C/F
**	98	0		NO/CO pinch valve operation when Fuel 2 is selected.
			0	Pinch valve closed (NO/CO not sampled)
			1	Pinch valve open (NO/CO sampled)
**	99	0		NO/CO pinch valve operation when Fuel 3 is selected.
			0	Pinch valve closed (NO/CO not sampled)
			1	Pinch valve open (NO/CO sampled)
	100-109			Unused

NB. Parameters 110 to 150 are a repeat of their respective options. These values need to be entered as both an option value and a parameter for safety reasons.

Parameters marked ** are new to the Mk6 Evolution MM.

2.14.2.6 VALVE PROVING

MK6 GAS VALVE PROVING/ OIL HIGH – LOW PRESSURE LIMIT

1: MAXIMUM PRESSURE CHANGE (SEE OPTION 133) ALLOWED DURING PROVING TIME SEE OPTION 132

2: ZERO PRESSURE (ATMOSPHERE) COMMISSIONED VALUE MEMORISED

3: DURING COMMISSIONING HIGH, LOW AND UP TO 15 INTER VALUES ARE STORED THROUGHOUT THE BURNER FIRING RANGE FOR ONLINE PRESSURE.

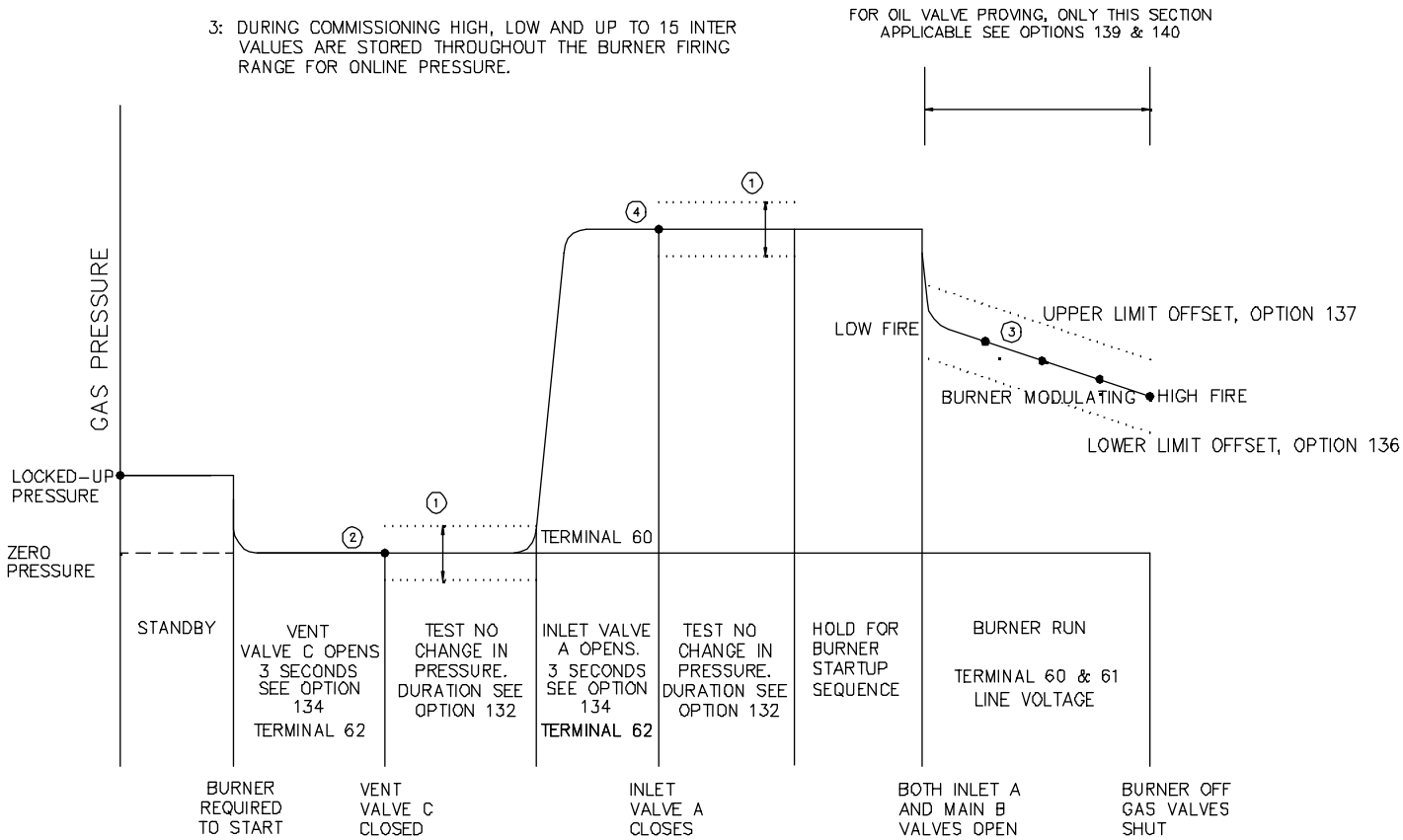

4: STATIC LINE PRESSURE COMMISSIONED VALUE MEMORISED.

TERMINAL 62

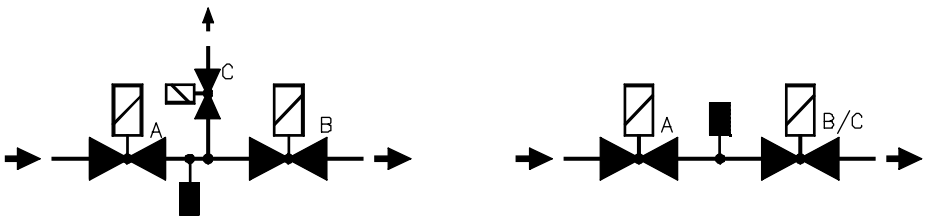

3 VALVE PROVING
A – T60, B – T61, C – T62

2 VALVE PROVING
A – T60, B/C – T61

14:05:98/3452/N.P.G.

GAS PRESSURE SENSORS

Pt No MM60006 – 0 – 65 mbar / 0 – 25 "wg.
MM60008 – 0 – 340 mbar / 0 – 135 "wg
MM60011 – 0 – 750 mbar / 0 – 300 "wg
MM60012 – 0 – 1380 mbar / 0 – 550 "wg

CONNECTIONS	
MK.6 MM	SENSOR
TER. 35	YELLOW
TER. 36	GREEN
TER. 33	BLUE
TER. 34	RED

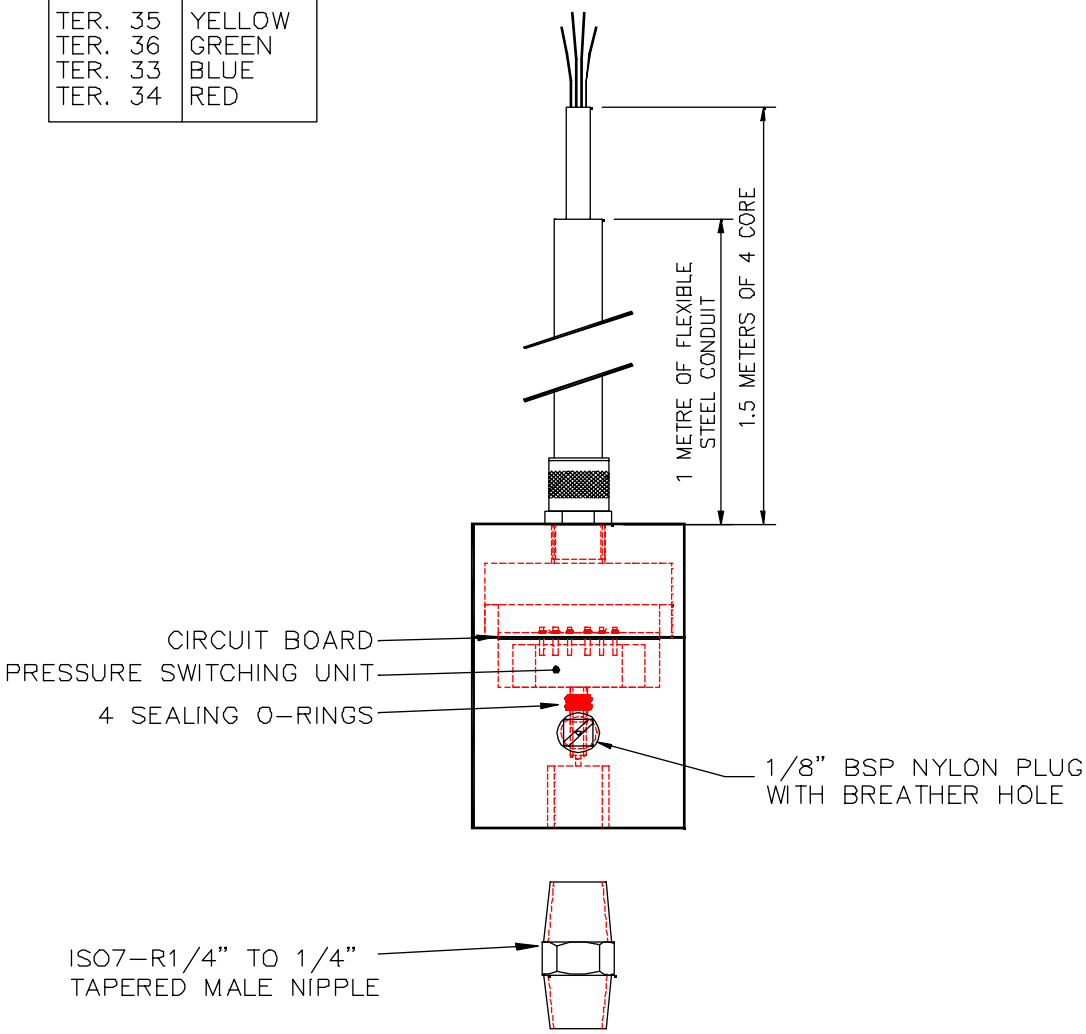

Notes	
IP	00
HOUSING & LID	ALLUMINIUM
POWER CONSUMPTION	0.1 WATTS
MOUNTING	VERTICAL AS SHOWN.
	BREATHER HOLES AWAY FROM ANY WATER SOURCE.

	Actual Operating Range											
	mbar				" w.g.				psi			
	min.	max.	†	zero range	min.	max.	†	zero range	min.	max.	†	zero range
MM60006	-2.5	65	1373.8	-2.5 to 1.25	-1	25	554	-1.0 to 0.5	-0.04	1	20	-0.04 to 0.02
MM60008	-12.5	340	1373.8	-12.5 to 6.25	-5	135	554	-5.0 to 2.5	-02	5	20	-0.2 to 0.1
MM60011	-30	750	2060.7	-30 to 15	-12	300	831	-12.0 to 6.0	-0.44	11	30	-0.44 to 0.22
MM60012	-55	1380	4121.4	-55 to 27.5	-22	550	1662	-22.0 to 11.0	-08	20	60	-0.8 to 0.4

† maximum pressure above which causes permanent sensor failure

AUTOFLAME OIL PRESSURE SENSOR
PART No.MM60009

COLOUR	DESTINATION
GREEN	35 (SIGNAL)
YELLOW	33 (0V)
BROWN	34 (+V)
WHITE	UNUSED
SCREEN	TERMINAL (S)

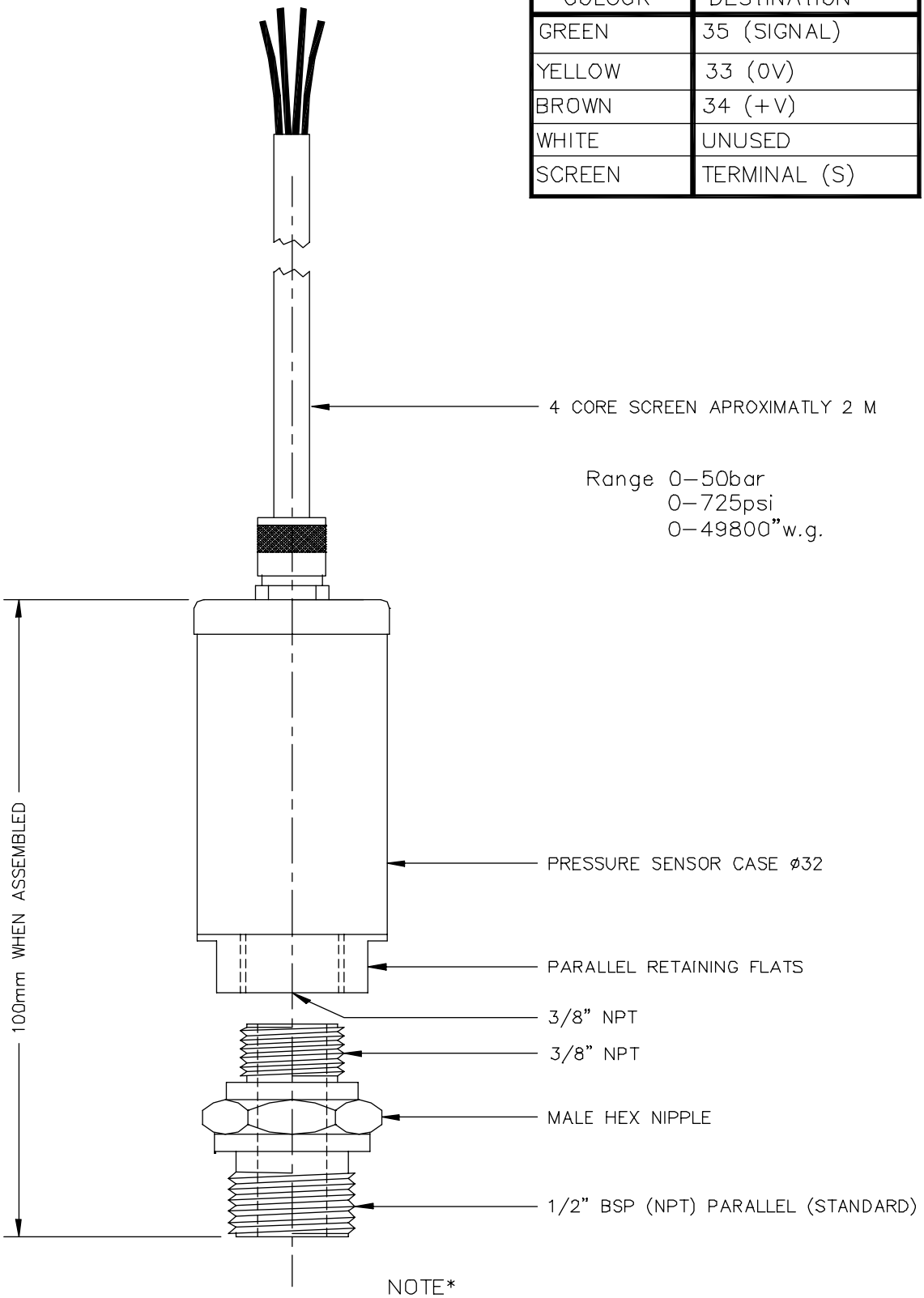

NOTE*
IF THE OIL & GAS PRESSURE SENSORS ARE BOTH USED THE SIGNAL TO TERMINAL 35 MUST BE SWITCHED USING A GOLD CONTACT RELAY.

5:7:99/3549/TF

2.14.2.6.3 Commissioning Valve Proving

If the Valve Proving System (VPS) facility is to be utilised then specific options/parameters must be set (refer to sections - selecting Options/Parameters. Only Options are detailed below, all respective parameters must be set to the same value).

Options 125 through 128 set VPS operation depending on the fuel selected (ie Fuel 1,2,3,4).

Option 125 - VPS operational on Fuel 1 (set value = 1).
Option 126 - VPS operational on Fuel 2 (set value = 1).
Option 127 - VPS operational on Fuel 3 (set value = 1).
Option 128 - VPS operational on Fuel 4 (set value = 1).

The following options must be set to configure the VPS operation.

Option 124 - Gas Pressure range (low/high).
Option 125 - Valve proving arrangement. (Two/Three valves).
Option 131 - Gas pressure Units (“wg/mBar).
Option 132 - Valve proving time.
Option 133 - Pressure change allowed during proving time.

IT IS THE COMMISSIONING ENGINEERS RESPONSIBILITY TO ENSURE THAT RELEVANT VALVE PROVING SYSTEM STANDARDS ARE CONFORMED TO.

The following formulae may be used for calculating the proving time and pressure change allowed. They are based on DVGW requirements of a leakage rate of 0.1% of the maximum volume flow.

Proving time:

Abbreviations:
Vpt - Valve proving time in seconds.
Ip - Inlet pressure in millibars.
Pv - Pipe volume in litres. (volume = πr^2 x length)
Mtp - Maximum gas throughput in litres per hour.

Formula:

$$Vpt = 4 \times \left[\frac{Ip \times Pv}{Mtp/1000} + 1 \right]$$

The pipe volume is the total volume of any interconnecting pipe between the valve seals.

Pressure change:

Formula:

0.25 x Nominal inlet pressure (mBar).

Example:

Proving Time -

Inlet pressure = 50 mBar.
Pipe volume = 5 litres.
Mtp = 100,000 litres per hour.

$$Vpt = 4 \times \left[\frac{50 \times 5}{100{,}000 / 1000} + 1 \right]$$

= 14 seconds.

Set Option 132 = 15 seconds.
Set Parameter 132 = 15 seconds.

Note: Option 132 is set in increments of 5 seconds, values must be rounded up.

Pressure change -

Inlet pressure = 100mBar.

0.25 x 100 = 25.0 mBar.

Set Option 133 = 25.0 mBar
Set Parameter 133 = 25.0 mBar

General Note

This is a metric formulae, therefore imperial units must converted before applying this calculation.

2.14.2.7 AIR PRESSURE PROVING

COMBUSTION AIR PRESSURE MONITORING PHILOSOPHY OF THE MK6 SYSTEM

MK6 PRESSURE SENSORS ARE DUAL CHANNEL & SELF CHECK.

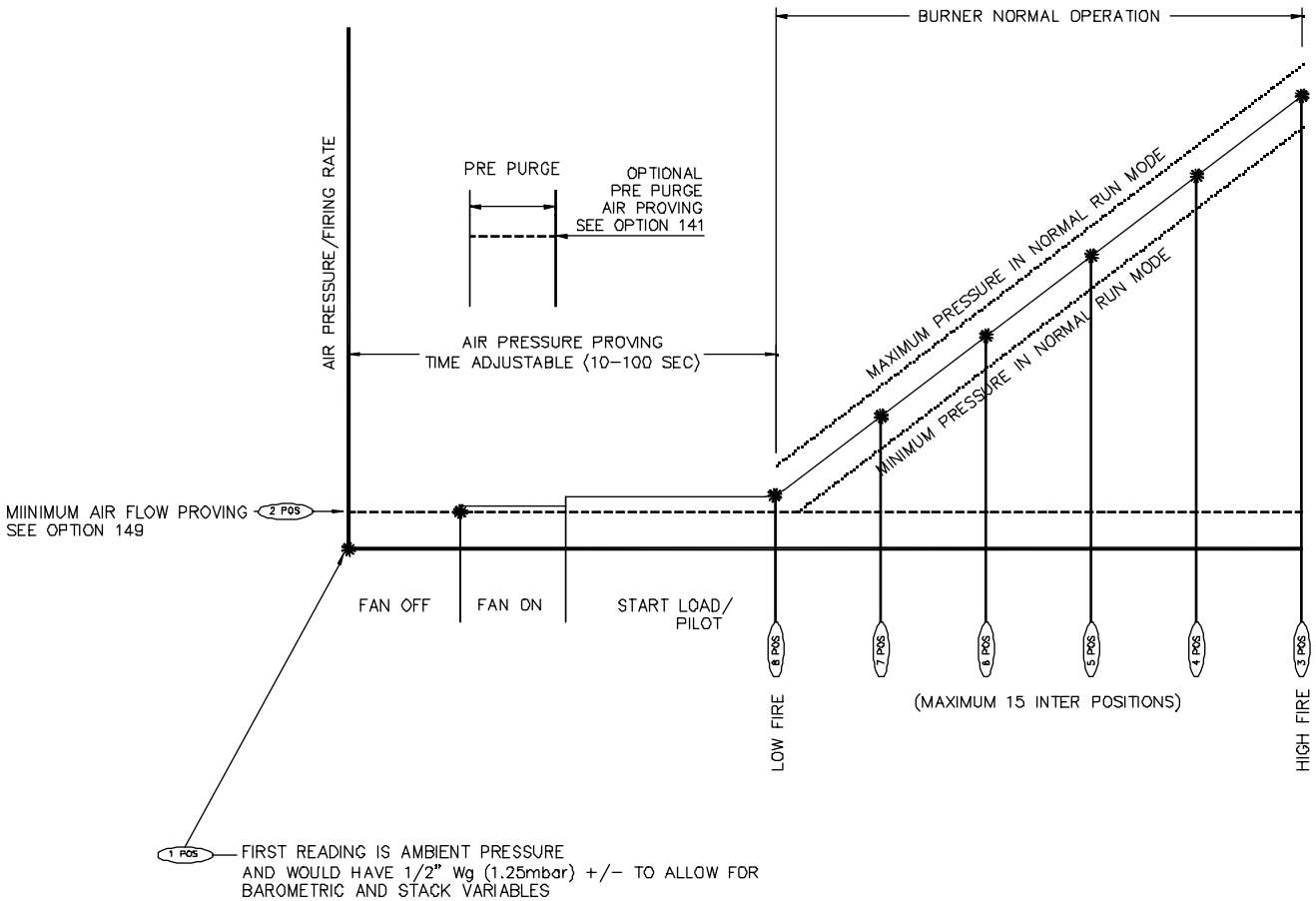

NOTE:
1: 'POS 8' MUST BE SET EQUAL TO 'POS 2' OR HIGHER
2: 'POS 2' MUST BE 0.25" Wg (0.62mbar) HIGHER THAN 'POS 1'
3: MINIMUM PRESSURE IN NORMAL RUN MODE MUST BE HIGHER THAN 'POS 2'
4: DEFAULT SETTINGS FOR MINIMUM & MAXIMUM IS 15% ABOVE AND BELOW ENTERED VALUE

13:11:00/3429/T.F.

AUTOFLAME AIR PRESSURE SENSOR FOR THE
MK.6 MM EXPLODED VIEW
Pt No MM60005

CONNECTIONS	
MK.6 MM	SENSOR
TER. 31	YELLOW
TER. 32	GREEN
TER. 33	BLUE
TER. 34	RED

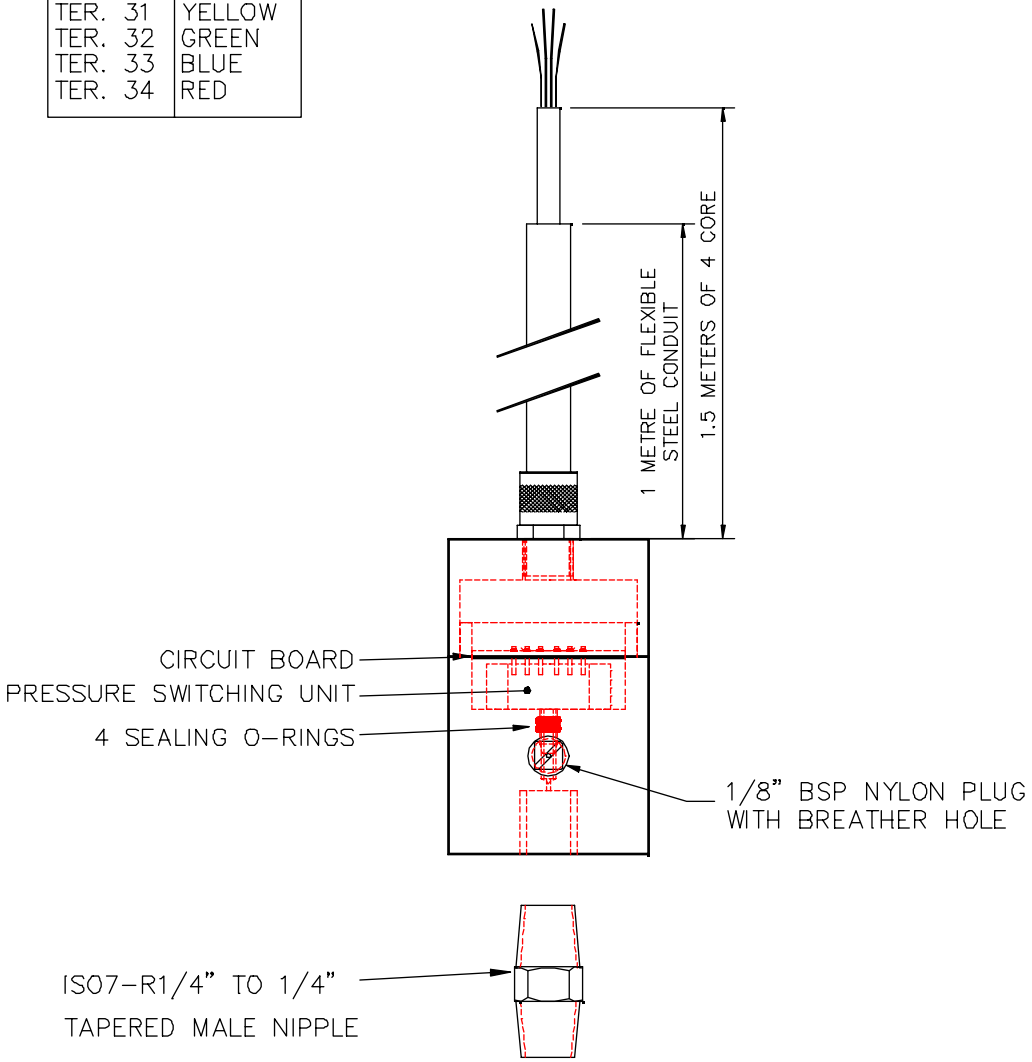

NOTES:	
IP	00
HOUSING & END CAP :	ALUMINIUM
POWER CONSUMPTION :	0.1 WATTS
MOUNTING :	VERTICAL AS SHOWN PORTS MUST BE KEPT FREE FROM WATER RUN TUBING TO PORTS DOWNWARDS
WORKING RANGE :	-1 to 25 " Wg / -2.5 to 65 mbar
ZERO RANGE:	-1 to 0.5" Wg / -2.5 to 1.25 mbar

22:06:00/3450/P.J.N.

Air Pressure Tapped Fitting

The Autoflame Mk6 Air Pressure Sensor, Part no. MM60005, can now be supplied with a tapped fitting to be installed as shown below, to measure a differential pressure. This is only necessary where the air pressure at low fire is below 0.4" w.g. or 1 mbar.

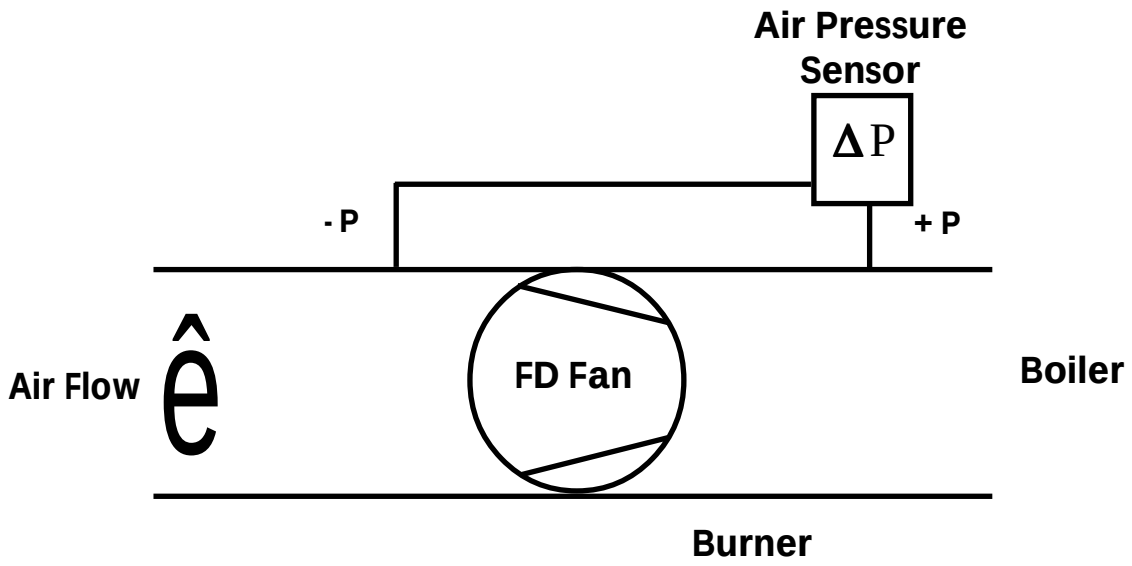

See options 145 to 149

2.14.2.8 OUTSIDE AIR TEMPERATURE COMPENSATION

This enables the boiler setpoint to be varied according to the outside air temperature, i.e. as the air temperature drops the boiler setpoint can be increased accordingly.

On the MK6 Evolution the Outside Temperature Compensation graph is displayed such that the Outside Temperature scale is from left to right as the outside temperature increases. In the options the maximum and minimum values of each scale are entered for the outside temperature and boiler setpoint. Previously on the Mk6, the Outside Temperature scale ran from right to left as the outside temperature increased and nominal values were set.

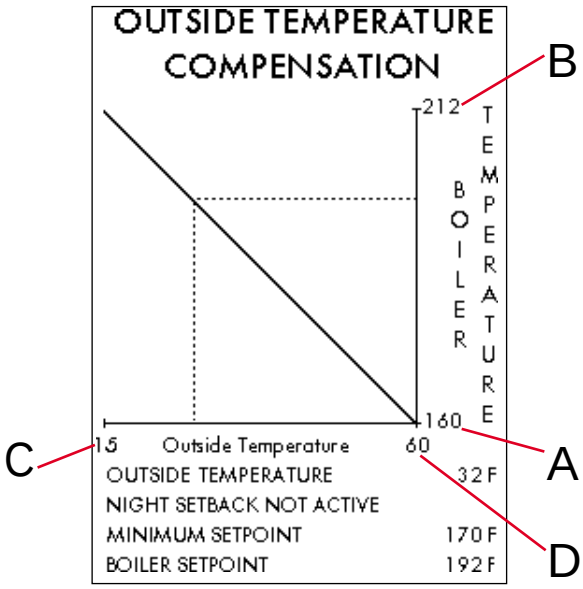

	Option No.	Factory Setting	Option Value	Description
A	**79.**	**0**		**Lowest required value.**
			0-995	Minimum required value allowed when O.T.C. optioned. (see option 80)
	80.	**0**		**Outside temperature compensation.**
			0	Disabled
			1	Enabled
				Note: A line voltage on Terminal 93 invokes a 'Night Setback' offset value, see option 85.
B	**81.**	**140**		**Maximum boiler required setpoint at minimum outside temperature.**
			50-999	Value limited in accordance with sensor selected by option 1.
C	**82.**	**-30**		**Minimum outside temperature.**
			-40 +40	For Centigrade
			-40 +104	If Fahrenheit
	83.	**65**		**Minimum boiler required setpoint at maximum outside temperature.**
			50-999	Value limited in accordance with sensor selected by option 1.
D	**84.**	**30**		**Maximum outside temperature.**
			-20 +40	For Centigrade
			-4 +104	If Fahrenheit
	85.	**10**		**Night Setback 'depression' offset value.**
				This offset is subtracted from the normal required value and activated by a line voltage on terminal 93.
			0-999	degrees/pressure

AUTOFLAME OUTSIDE AIR TEMPERATURE SENSOR
FOR THE MK6 MM
Pt No : MM60007

CONNECTIONS	
MK.6 MM	SENSOR
19 (RED) 20 (BLUE)	RED BLUE

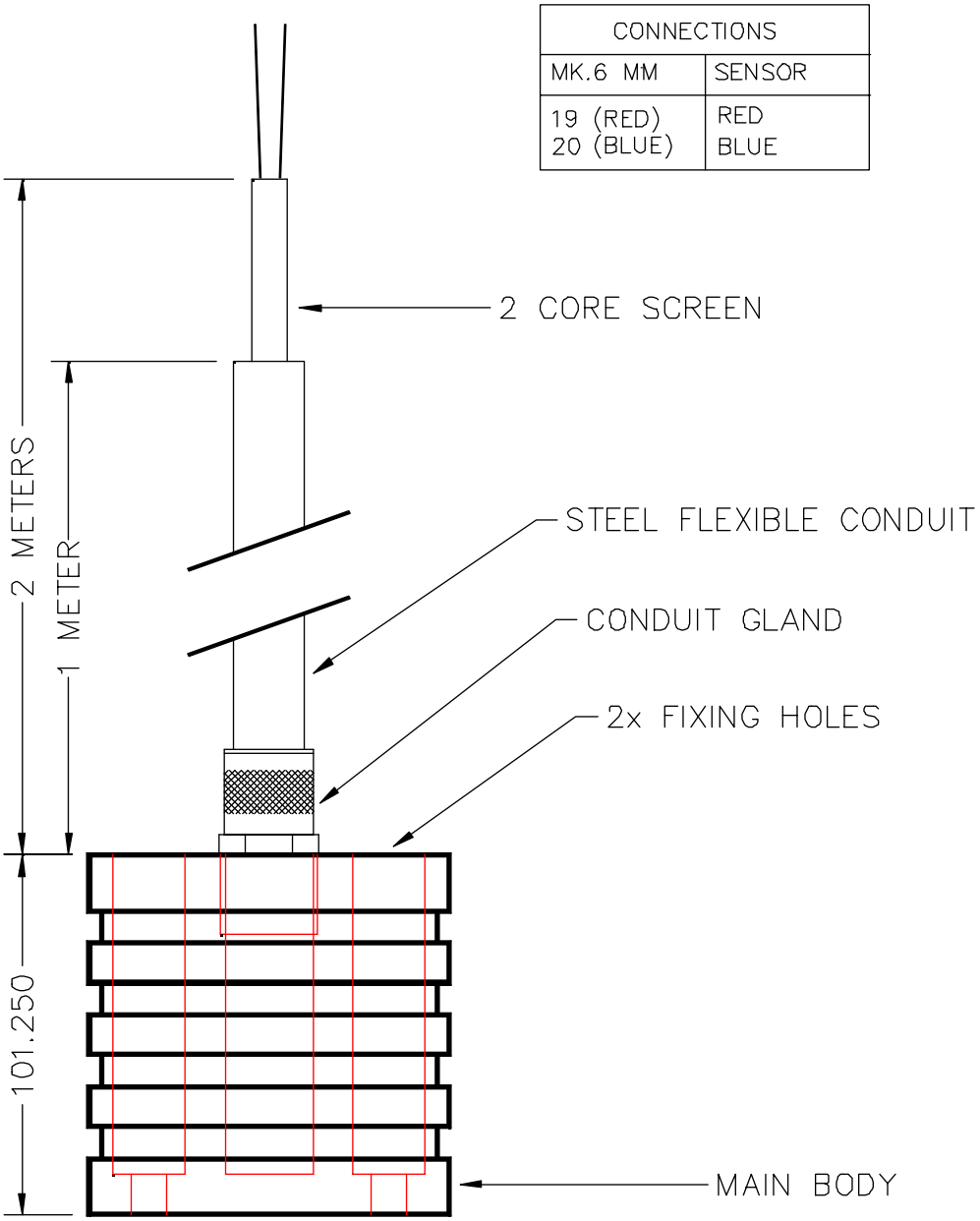

NOTE: IP 54
HOUSING : ALUMINIUM
POWER CONSUMPTION : POWERED BY MK.6 MM
MOUNTING : ANY ORIENTATION

06/10/97/3391/NPG

2.14.2.9 MK.6 ELECTRICAL SPECIFICATIONS

2.14.2.9.1 Classifications

Classification According to EN298 - F B L L J B

Mains Supply: 230V, +10%/-15% } 47.5 - 63 Hz, Unit max. power consumption 20W
120V, +10%/-15% }

Climate: Temperature 0 to +60 °C
Humidity 0 to 90% non-condensing.

Protection Rating: The unit is designed to be panel mounted in any orientation and the front facia is IP65. The back of the unit is IP20.

Inputs & Outputs: 230V Unit:

Outputs	Terminal	57	250 mA	Must be connected through contactor	Max. load 6 Amp.
		58	250 mA	Must be connected through contactor	
		59	1Amp, 0.6 power factor		
		60	1Amp, 0.6 power factor		
		61	1Amp, 0.6 power factor		
		62	1Amp, 0.6 power factor		
		63	1Amp, 0.6 power factor		
		64	250mA	To drive relay/lamp only	
		78	100mA	To drive relay only - switched neutral	
		79	100mA	To drive relay/lamp only - switched neutral	
Input/Outputs		80	0.5 Amp	External Flame Safeguard	
		81	0.5 Amp		
		82	0.5 Amp		
		83	0.5 Amp		
		84	0.5 Amp		
Analogue I/O.s		240 Ω or less.			

120V Unit:

Outputs	Terminal	57	250 mA	Must be connected through contactor	Max. load 6 Amp.
		58	250 mA	Must be connected through contactor	
		59	2Amp, 0.6 power factor		
		60	2Amp, 0.6 power factor		
		61	2Amp, 0.6 power factor		
		62	2Amp, 0.6 power factor		
		63	2Amp, 0.6 power factor		
		64	250mA		
Input/Outputs		80	1 Amp	External Flame Safeguard	
		81	1 Amp		
		82	1 Amp		
		83	1 Amp		
		84	1 Amp		
Analogue I/O.s		240 Ω or less.			

N.B.

1. The Low voltage connections are not safe to touch. Protection against electric shock is provided by correct installation.
2. All Sensor cables should be maximum 25 m and use Screened cable as specified in Section 2.9.11.2.
3. **The burner 'High Limit Stat' must be of the manual reset type.**

2.14.2.9.2 Fuse Ratings

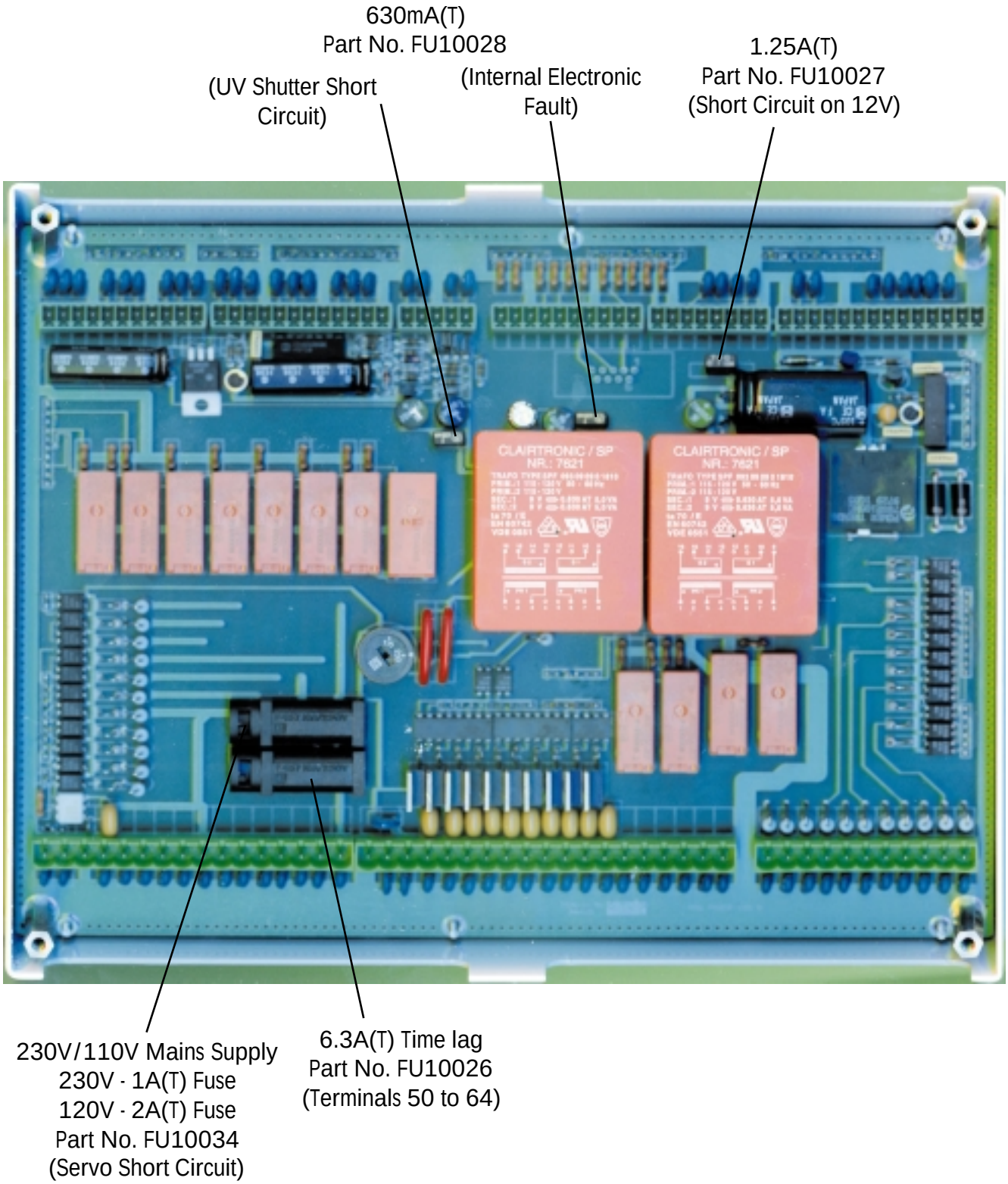

Text in brackets indicates possible cause of fuse blowing.

All fuses should be time lag type (T).

2.14.2.9.3 Terminals Description

1	Voltage Input, 0-10V. For Channel 5 VSD use only. Can be connected to the voltage output of a VSD or tachometer system as appropriate.
2	Current Input, 0-20mA. For Channel 5 VSD use only. Can be connected to the current output of a VSD or tachometer system as appropriate.
3	0V common for terminals 1 and 2.
4	Voltage Input, 0-10V. For Channel 6 VSD use only. Can be connected to the voltage output of a VSD or tachometer system as appropriate.
5	Current Input, 0-20mA. For Channel 6 VSD use only. Can be connected to the current output of a VSD or tachometer system as appropriate.
6	0V common for terminals 4 and 5.
7	Voltage Input, 0-10V. Used for external modulation or external required value.
8	Current Input, 0-20mA. Used for external modulation or external required value.
9	0V common for terminals 7 and 8.
10	Voltage Output, 0-10V. For Channel 5 VSD use only. Can be connected to the voltage input of a VSD.
11	Current Output, 4-20mA. For Channel 5 VSD use only. Can be connected to the current input of a VSD.
12	0V common for terminals 10 and 11.
13	Voltage Output, 0-10V. For Channel 6 VSD use only. Can be connected to the voltage input of a VSD.
14	Current Output, 4-20mA. For Channel 6 VSD use only. Can be connected to the current input of a VSD.
15	0V common for terminals 13 and 14.
16	Voltage Output, 0-10V. Varies in accordance with firing rate.
17	Current Output, 4-20mA. Varies in accordance with firing rate.
18	0V common for terminals 16 and 17.

Note that all the 0V terminals (3, 6, 9, 12, 15, 18) are common to each other. All of the circuitry, associated with the analogue inputs and outputs detailed above, is isolated from earth potential (ie floating).

19, 20	Connections to the Autoflame outside temperature sensor.
21, 22	Connections to an Autoflame self check UV sensor.
23, 24	Communications port connections for Twin Burner operation.
25, 26	Communications port connections to an Exhaust Gas Analyser.
27, 28	Communications port connections for DTI and/or IBS operation.
29, 30	Communications port (currently unassigned).
31, 32	Signal inputs from Autoflame Air pressure sensor.
33	0V supply to Autoflame Air/Gas/Oil pressure sensors.
34	+12V supply to Autoflame Air/Gas/Oil pressure sensors.
35	Signal input from Autoflame Oil pressure sensor.
35, 36	Signal inputs from Autoflame Gas pressure sensor.
37, 38	Connections to an Autoflame Boiler temperature detector.
37, 38, 39	Connections to an Autoflame Boiler pressure detector.
40	0V Supply to Channel 1 and Channel 2 positioning motors.
41	+12V Supply to Channel 1 and Channel 2 positioning motors.
42	Signal from Channel 1 positioning motor, indicating position.
43	Signal from Channel 2 positioning motor, indicating position.
44	Signal from Channel 3 positioning motor, indicating position.
45	Signal from Channel 4 positioning motor, indicating position.
46	0V Supply to Channel 3 and Channel 4 positioning motors.
47	+12V Supply to Channel 3 and Channel 4 positioning motors.
48, 49	No terminals allocated.

50,51	Connections to an Autoflame UV sensor.
52	Unused – do not connect.
53	Mains voltage input. Burner on/off signal.
54	Mains voltage input. Safety circuits (eg Air proving).
55	Mains voltage input. Proving circuits (eg Gas valve proof of closure)
56	Mains voltage input. Lockout reset.
57	Mains voltage output. Call for heat.
58	Mains voltage output. Burner motor.
59	Mains voltage output. Start/Pilot valve.
60	Mains voltage output. Main fuel valve 1.
61	Mains voltage output. Main fuel valve 2.
62	Mains voltage output. Vent valve.
63	Mains voltage output. Ignition transformer.
64	Mains voltage output. Burner lockout indication.
65	No terminal allocated.
66	Mains supply earth.
67	Main supply neutral.
68	Mains supply live/hot.
69	Mains voltage output. Power to positioning motors.
70	Switched neutral – drives Channel 1 positioning motor clockwise.
71	Switched neutral – drives Channel 1 positioning motor counter clockwise.
72	Switched neutral – drives Channel 2 positioning motor clockwise.
73	Switched neutral – drives Channel 2 positioning motor counter clockwise.
74	Switched neutral – drives Channel 3 positioning motor clockwise.
75	Switched neutral – drives Channel 3 positioning motor counter clockwise.
76	Switched neutral – drives Channel 4 positioning motor clockwise.
77	Switched neutral – drives Channel 4 positioning motor counter clockwise.
78	Switched neutral – to drive 2-port valve for IBS operation.
79	Switched neutral - Alarm output.

80, 81	Volt free contact. For use when using an external burner control. Wired in series with the burner control circuit.
82	Volt free contact. For use when using an external burner control. Common for terminals 83 and 84.
83	Volt free contact. For use when using an external burner control. High position proving signal to external burner control.
84	Volt free contact. For use when using an external burner control. Low position proving signal to external burner control.
85	Mains voltage input. For use when using an external burner control. Burner on/off signal from external burner control.
86	Mains voltage input. For use when using an external burner control. High/Low Initiate signal from external burner control.

Refer to section 2.14.6.4/5 when using an external burner control.

87	Mains voltage input. Select second required value.
88	Mains voltage input. Can be used to select this MM as lead boiler when IBS is implemented. If this terminal is used to select the lead boiler, it will take priority over a lead boiler set via the DTI.
89	Mains voltage input. Selects fuel 1 curve.
90	Mains voltage input. Selects fuel 2 curve.
91	Mains voltage input. Selects fuel 3 curve.
92	Mains voltage input. Selects fuel 4 curve.
93	Mains voltage input. If low pressure steam operation is optioned, this input is used to detect low boiler temperature (by means of an appropriate temperature switch). If outside temperature compensation is optioned, this input is used to activate the night setback.
94	Mains voltage input. Selects hand operation.
95	Mains voltage input. Selects low flame hold operation.

S	All terminals marked S are internally connected to the mains earth terminal 66. They are provided for connections to the various screened cables. Refer to the schematic connection diagrams, eg section 2.14.6.1.

2.14.2.9.4 Cables

Screened Cable

The screened cable used from the MM to the servo motors and detectors must conform to the following specification:

16/0.2mm PVC Insulated Overall Braid, Screened, PVC Sheathed.

Sixteen wires per core;
Diameter of wires in each core 0.2mm;
Rated at 440 volts a.c. rms at 1600 Hz;
DEF 61-12 current rating per core 2.5 Amps;
Maximum operating temperature 70 degrees C.;
Nominal conductor area 0.5 square mm per core;
Nominal insulation radial thickness on core 0.45mm;
Nominal conductor diameter per core 0.93mm;
Nominal core resistance at 20 degrees C. 40.1 Ohm/1000m.;
Nominal overall diameter per core 1.83 mm.;
Fill factor of braid screen 0.7;
Equivalent imperial conductor sizes 14/0.0076.

Use the number of cores suitable for the application.
A universal part numbering system appears to have been adopted for this type of cable as follows:

16-2-2C 2 Cores
16-2-3C 3 Cores
16-2-4C 4 Cores
16-2-6C 6 Cores

(5 Cores not readily available).

Data Cable

Data cable must be used for connections between MMs for twin burner/sequencing applications and between MMs and EGAs.

Types of data cable that can be used:

1. Beldon 9501;
2. STC OS1P24.

Samples are available upon request.
Cable can be ordered directly from Autoflame Engineering.

2.14.2.10 VARIABLE SPEED DRIVES

Installation

The following recommendations are to assist with the installation and fault finding when using variable speed drives (Inverters).

Inverter Selection

Variable speed drives selection is critical to proper operation. Ensure that correct size Inverter has been selected for the application and is suitable for the motor, and has the necessary input/output signals as shown in Drawing No. 3246 - Section 2.14.6.1

Mains Cable Connections

Power connections from the Variable Speed Drive to the motor. It is recommended for mains cabling (3 phase) and fuses, that they are to be dimensioned in accordance with the kW rating required.

Motor Cabling

A four core conductor screened cable is recommended. This is due to the rapid voltage changes occurring in variable speed drive systems.

To Avoid Disturbances

It is advised that the motor cables should not be installed with other cable routes: Avoid long parallel runs with other cables.

Disturbances caused by radiation from the motor cable can be reduced by installing in-line chokes in the motor cable, however these chokes may reduce the motor voltage and the maximum available torque. If noise problems exist and unstable output signals cannot be contained within the window and disparity band shown on Drawing No. 2335, Section 2.14.10.3, you should contact the supplier of the VSD for more detailed information and advice.

Setting the VSD for Operation

Due to the vast range of Variable Speed Drives it is not possible to give setting/parameters for all types, however some basic rules apply. The minimum and maximum Hz (rpm) should be adjusted before commissioning the Micro Modulation unit. Also the ramp time should be set for the fastest time possible, taking into account limitation of the motor and the application.

Normal settings would be, low speed 25Hz and high speed 50/60Hz. It is not recommended to set low speed lower than 20Hz. This is because the feed back signal tends to be unstable in this range.

Commissioning

See options 90 to 107 for VSD setup. Positions entered for High, Inter and Start as if servomotors were present.

Input and Output Signals in Relationship to Frequency

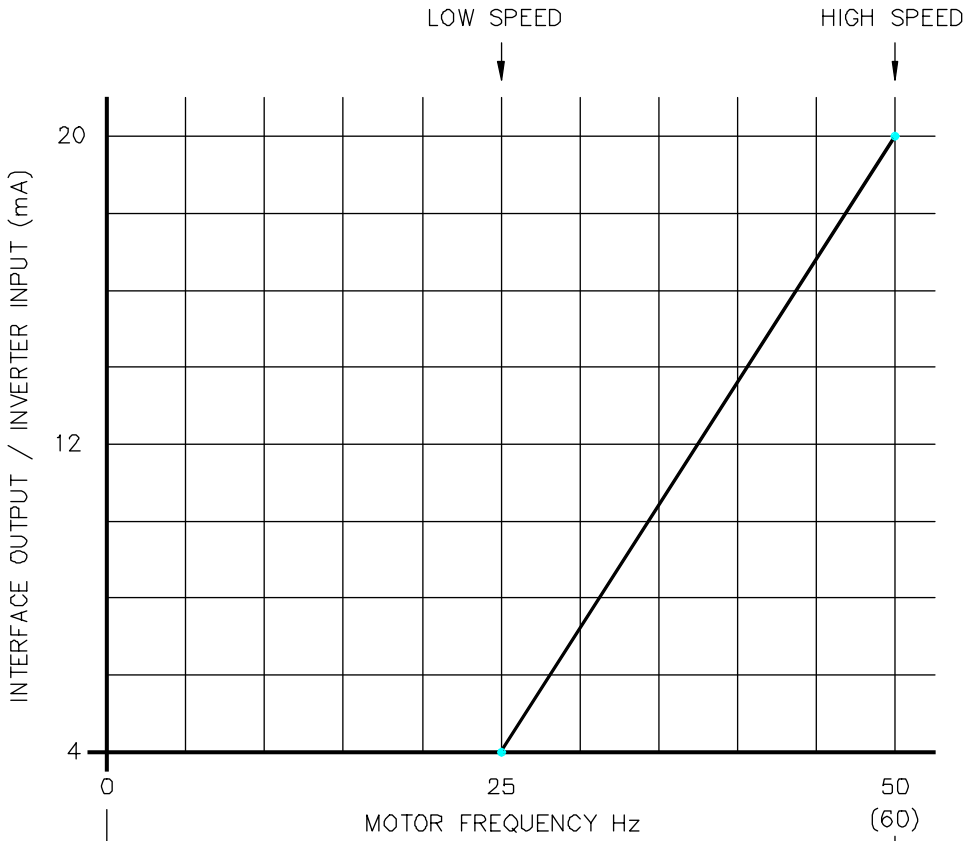

GRAPH A

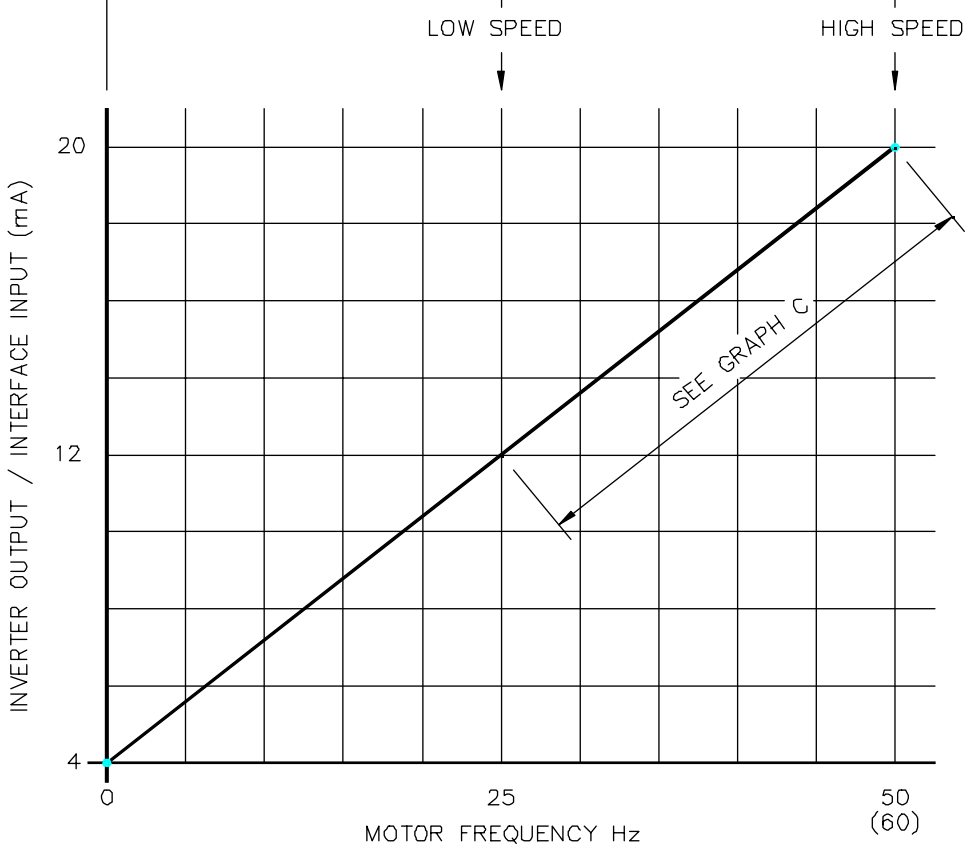

GRAPH B

13: 5: 98/2334/SBK

Operational Characteristics of Inverter Output/Interface Input in Relationship to Frequency

WINDOW: CORRECT SIGNAL +/− 0.4mA or 0.2V
DISPARITY: SIGNAL CORRECTS FOR 3 SECONDS +/− 0.8mA or 0.4V

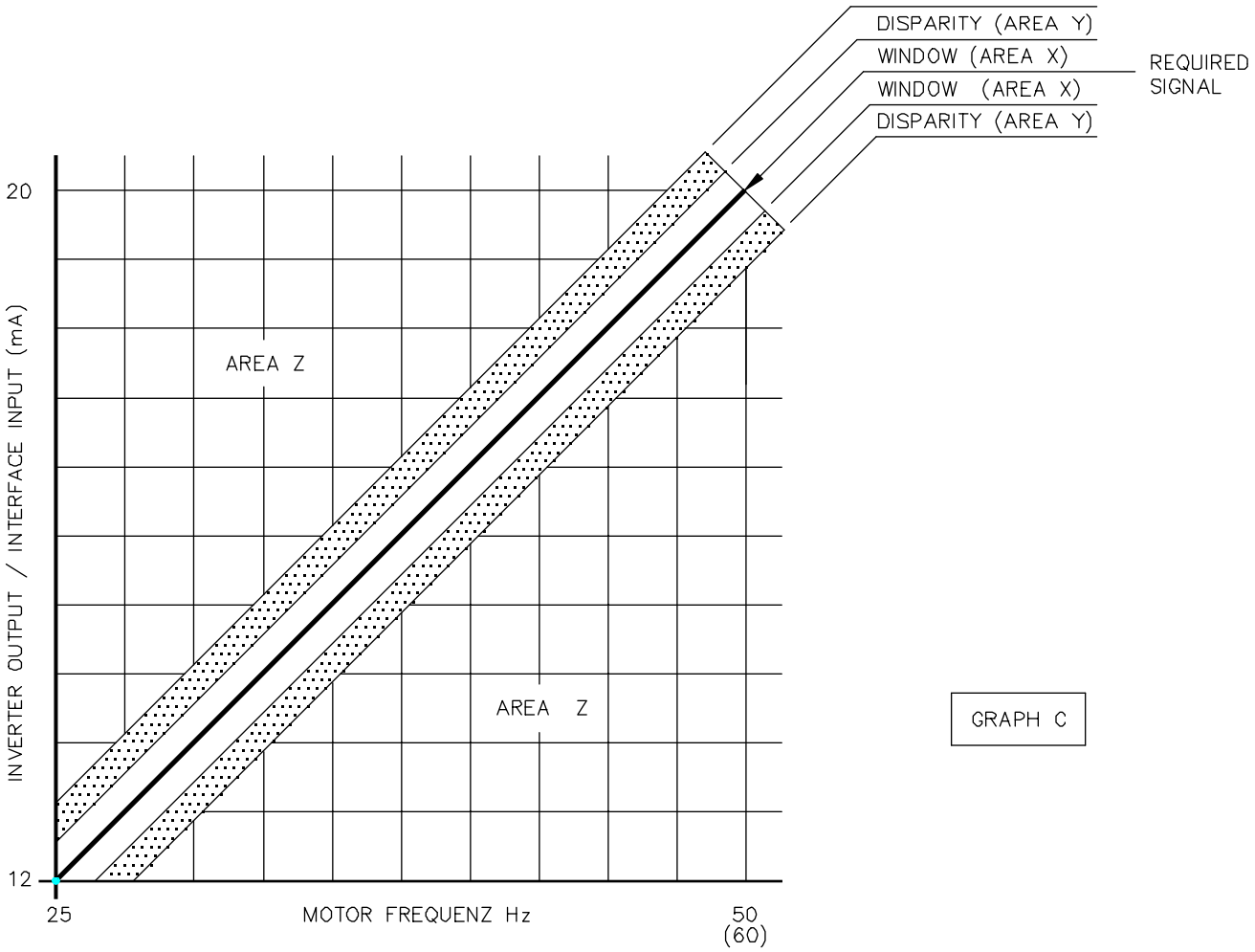

GRAPH C

13: 05: 98/2335/SBK

Inverter Interface Safety Software.

In a typical example the motor speed at 50Hz would be 2900rpm and the motor speed at 25Hz would be 1450rpm. This example is typical as there is a linear relationship between linear speed and cycles Hertz.

The VSD Software allows the following amount of error (disparity) between signal out to the VSD and signal return to the MM.

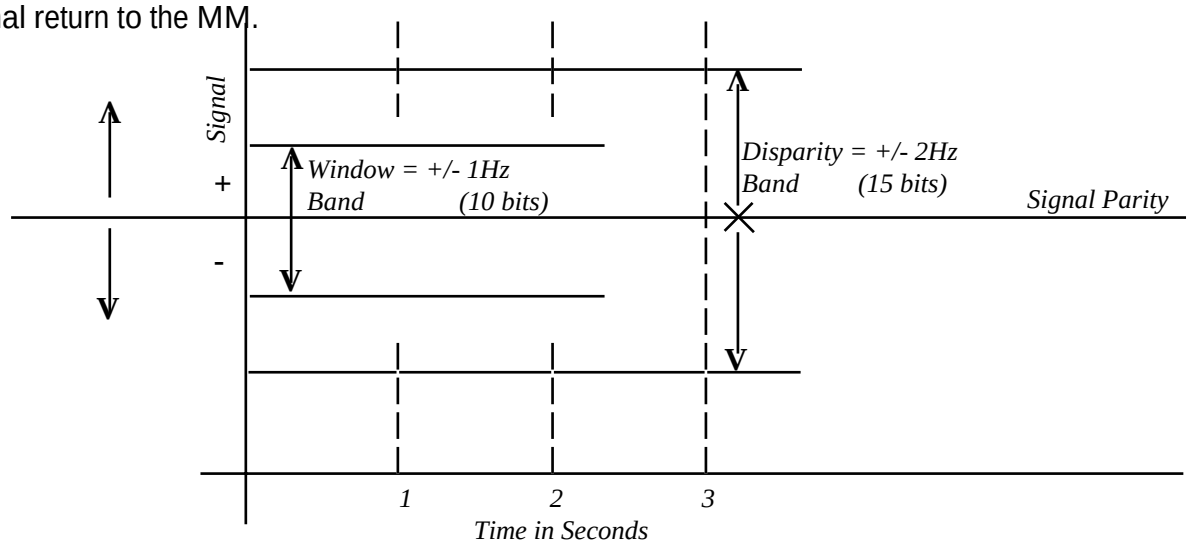

The "Window" tolerance has been implemented to accommodate small variations between input and output signal that result from processing through the various A-D and D-A converters involved in the control loop, also motor "Slip", acceleration and deceleration times, all of which produce small variations.

The "Disparity" tolerance which is time limited to a short duration is implemented to deal with the transient disparity/Error between input and output signals that results from the PI control mechanism that is typical in Inverters (motor speed control mechanism) not operating in phase with the PI (D) control philosophy in the M.M. (Micro Modulation Fuel Air Ratio Controller). This transient disparity occurs and is always self-correcting within the three second time tolerance nominated in our control philosophy.

1. Notwithstanding the above, to deal with transients of a very small time scale but of an amplitude greater than the disparity (area Y) as in Drawing 2335, Section 2.14.2.10.3, there is an additional mechanism in the software that allows transient deviations of any amplitude to be tolerated for a duration of less than one second. Under these conditions an Error will not be flagged.
   Note: Drawing 2335 (Area Z). Any signal deviation longer than one second in Area Z will activate safety errors.
   The tolerance safety time is set for 3 seconds.

2. The "Window" tolerance is +/- 5 bits = 1 Hz = 58rpm (on a motor rotating at 2900rpm at 50Hz).

3. The disparity tolerance is +/- 10 bits = 2Hz = 116rpm (on a motor rotating at 2900rpm at 50Hz). Note that disparity band 2Hz is limited to a maximum of 3 seconds.

4. Fan laws state that
   a.) Speed and volume are a direct linear progression.
   b.) Speed increase as a percentage affects pressure produced by the fan as a square root function.

5. The variations in signal allowed in our software would have considerably less effect on the air fuel ratio supplied to the combustion process than variations in ambient temperature/air density etc.

Control Philosophy

When the M.M. is commissioned all the positions for the fuel/air ratio are entered into the memory. These positions are stored together with a motor speed and air damper position. This allows the MM to measure the slip by measuring output signal to the Inverter, return signal from a tacho. and learning the difference for any air position/motor speed setting. This control form gives the facility for a different combination of air/motor speed settings to be accommodated for varying fuels, i.e. F1, F2, F3 & F4. This facility accommodates variances for air requirement for different fuels which is fundamental to the hydrocarbon ratio of the fuel.

Diagram to show Increase in Slip Caused by Damper Sited on Inlet to Combustion Fan
(Caused by pressure/density variations that fan operates in as a function of its position in load index).

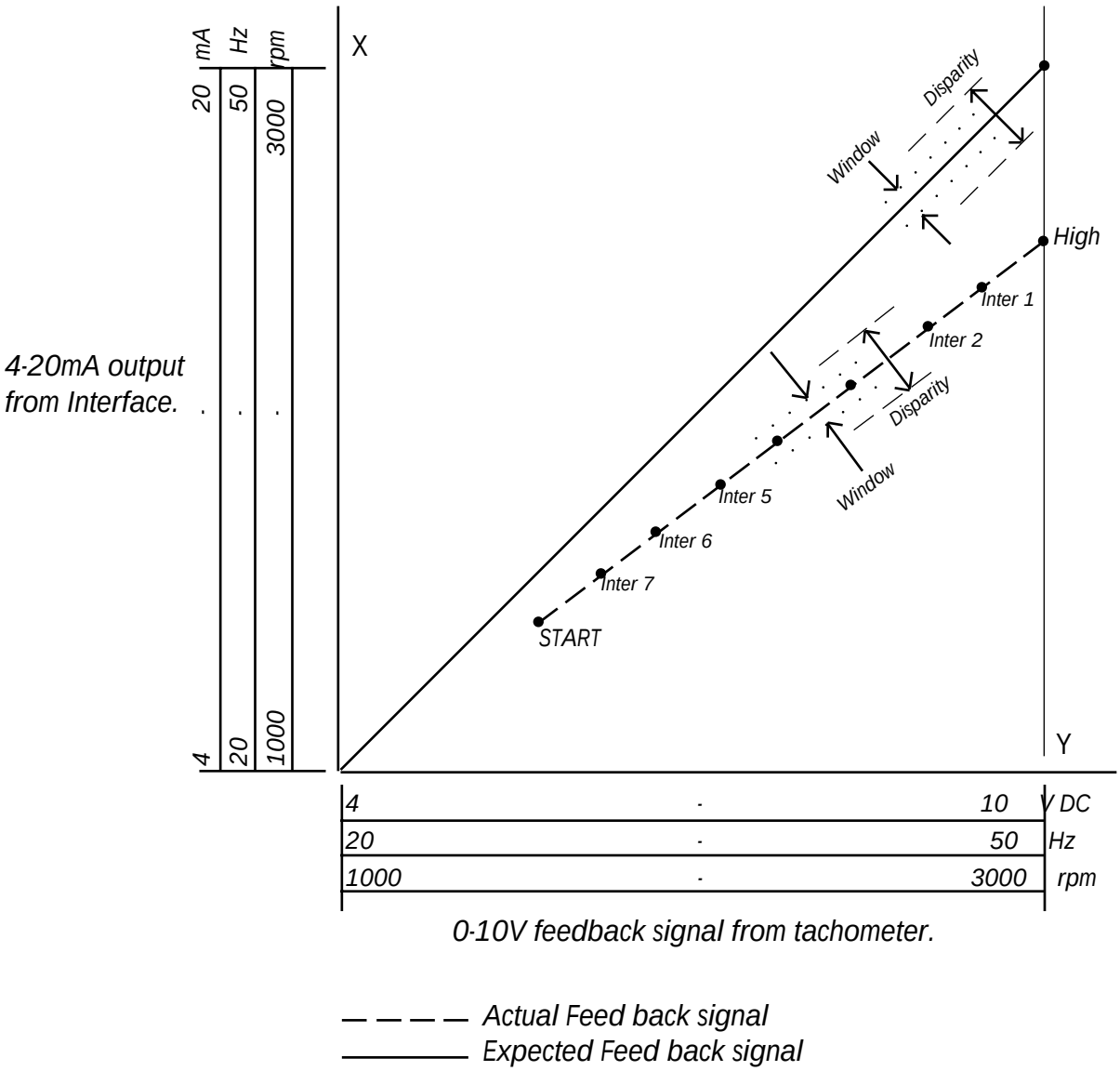

During commissioning, each time a position is entered (HIGH/INTER/START) the MM also stores the feedback signal value. When the START (low flame) position is entered these values are stored permanently in the memory. A set of values can be stored for each fuel (max. 4). When the M.M. is in the RUN mode the set of values stored for the fuel presently selected is used to generate the window and disparity error checking bands. In commissioning mode error checking is disabled. During run the error checking is disabled during the start up cycle.

2.14.2.11 INSTALLATION CHECKS

Commissioning Checks

When the installation and all burner adjustments are completed, the entire burner control system should be tested in accordance with the manufacturer's instructions. The procedure should verify the correct operation of:

1. Each operating control (temperature, pressure, etc.)
2. Each limit switch (temperature, pressure, low water cutoff, etc.)
3. Each interlock switch (airflow switch, high and low fuel pressure or temperature switches, purge and low fire switches, fuel valve proof of closure interlock, etc.)
4. Pilot flame failure response and lockout.
5. Main flame failure response and lockout.
6. Tight shut off of all valves.

Operational Checks

1. Close manual main shut-off valve
2. Recheck all limit circuit wiring for proper operation and correct connection
3. Confirm that the automatic main fuel valves are wired correctly
4. Power the control and electronically check the proper sequence of operation
5. After assuring yourself that all the interlocks and valves are properly wired and that the sequence of operation is correct, open the manual main shut-off fuel valve and proceed cautiously through the boiler light off process. Check all safety interlocks for proper shutdown of the boiler.

Interrupted Pilot

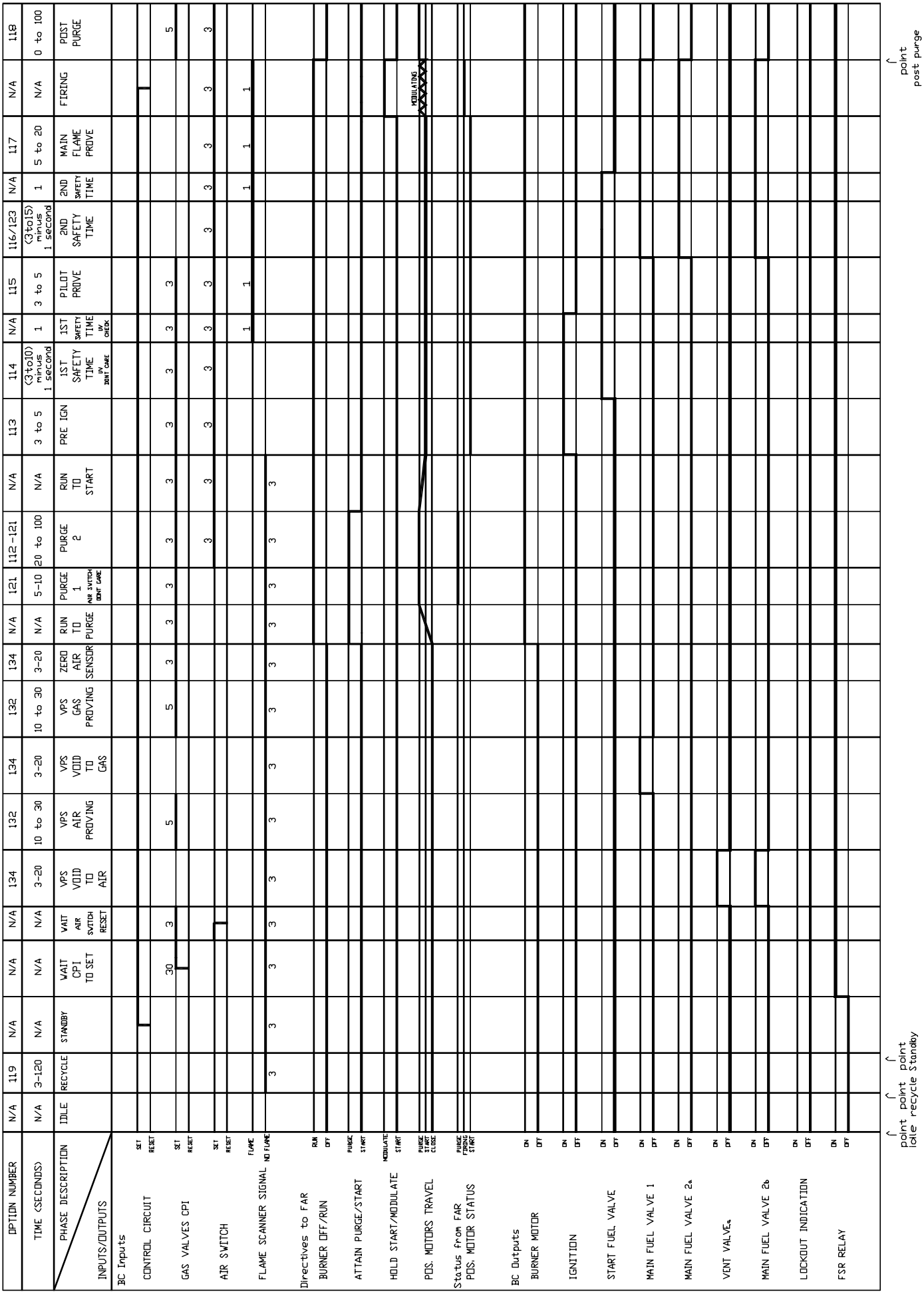

Lockout

OPTION NUMBER	N/A	N/A
TIME (SECONDS)	N/A	N/A
PHASE DESCRIPTION	NORMAL LOCKOUT	SPECIAL LOCKOUT
INPUTS/OUTPUTS		
BC Inputs		
CONTROL CIRCUIT	SET RESET	
GAS VALVES CPI	SET RESET	
AIR SWITCH	SET RESET	
FLAME SCANNER SIGNAL	FLAME NO FLAME	
Directives to FAR		
BURNER OFF/RUN	RUN OFF	
ATTAIN PURGE/START	PURGE START	
HOLD START/MODULATE	MODULATE START	
POS. MOTORS TRAVEL	PURGE START CLOSE	
Status from FAR POS. MOTOR STATUS	PURGE FIRING START	
BC Outputs		
BURNER MOTOR	ON OFF	
IGNITION	ON OFF	
START FUEL VALVE	ON OFF	
MAIN FUEL VALVE 1	ON OFF	
MAIN FUEL VALVE 2a	ON OFF	
VENT VALVEa	ON OFF	
MAIN FUEL VALVE 2b	ON OFF	
LOCKOUT INDICATION	ON OFF	
FSR RELAY	ON OFF	

BURNER CONTROL SEQUENCE - LOCKOUT

Intermittent Pilot

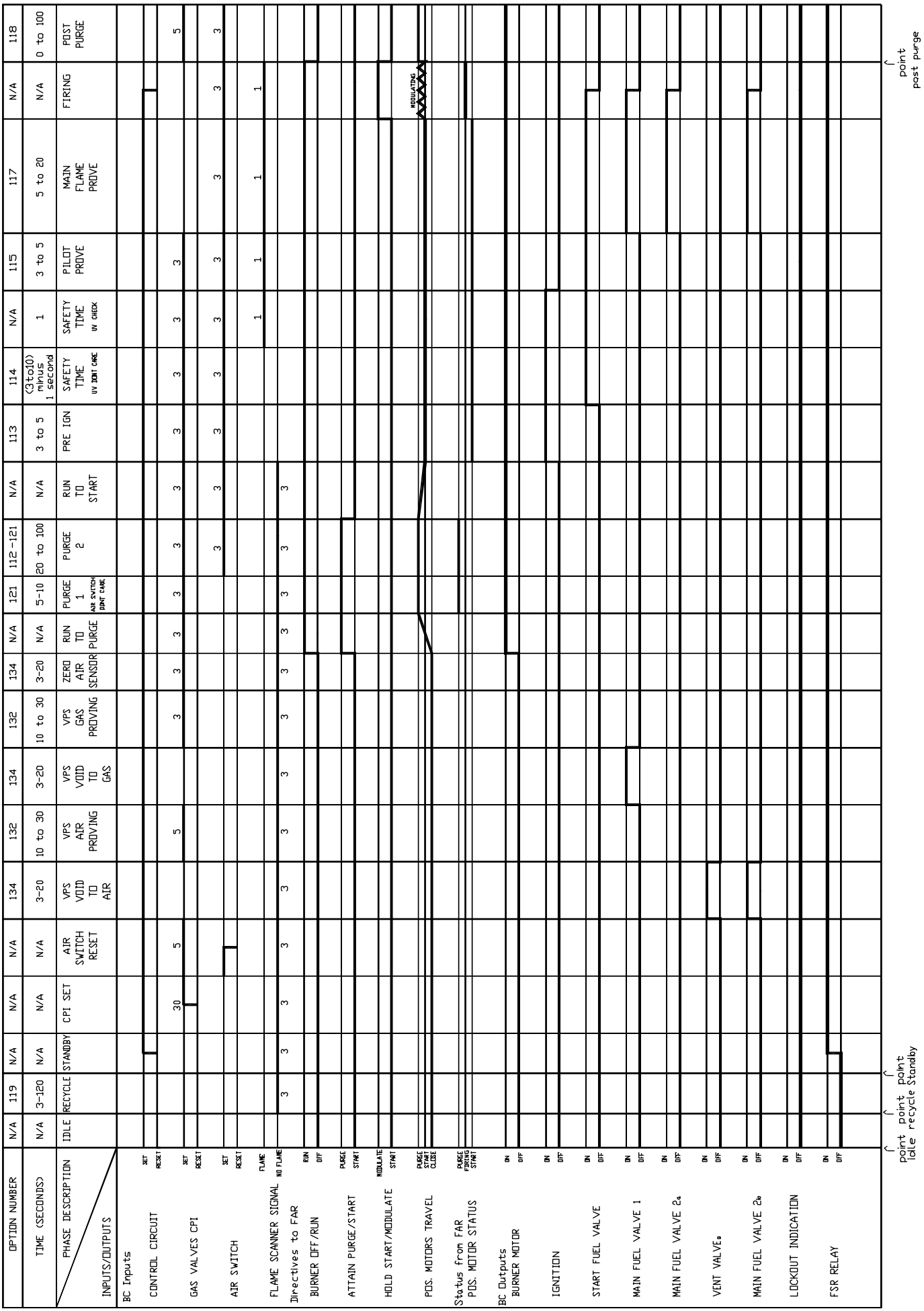

Post Burner Operation VPS

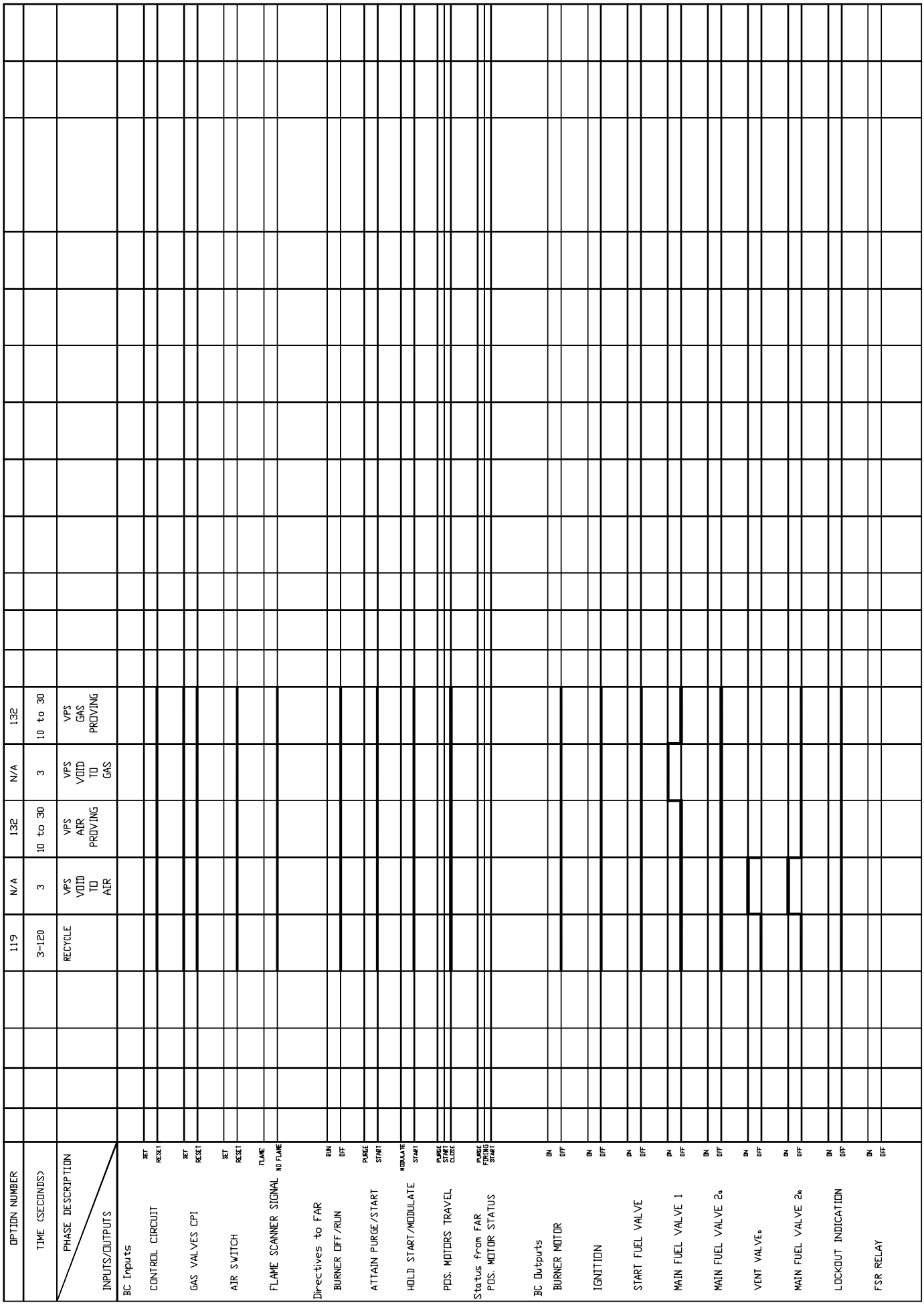

Diagram Notes

If VPS not optioned on fuel selected VPS phases are bypassed.

point idle:
this phase is set at power up when no fuel selected on exit from lockout.

point recycle:
this phase is set on exit from firing and post purge if VPS has not operated after burner run.

point post purge:
this phase is set only if post purge is optioned.

point standby:
this phase is set if VPS has operated after burner run.

Normal lockout is reset when either the mains lockout reset input is set for 1 second or the front facia lockout reset button is pressed for 1 second.

Special lockout is set if either the mains lockout reset input Lockout Reset or front facia Lockout Reset input is set for 10 or more seconds. Normal lockout is set on exit from special lockout and is reset in the normal way.

Bold waveforms indicate required condition. Values above/below waveform are time in seconds that the state must be continuosly incorrect after which a lockout is set. Shown monitor inputs are don't care if no bold waveform.

2.14.3.2 Self Check UV Scanner

Part Numbers: MM60003
MM60003/HS

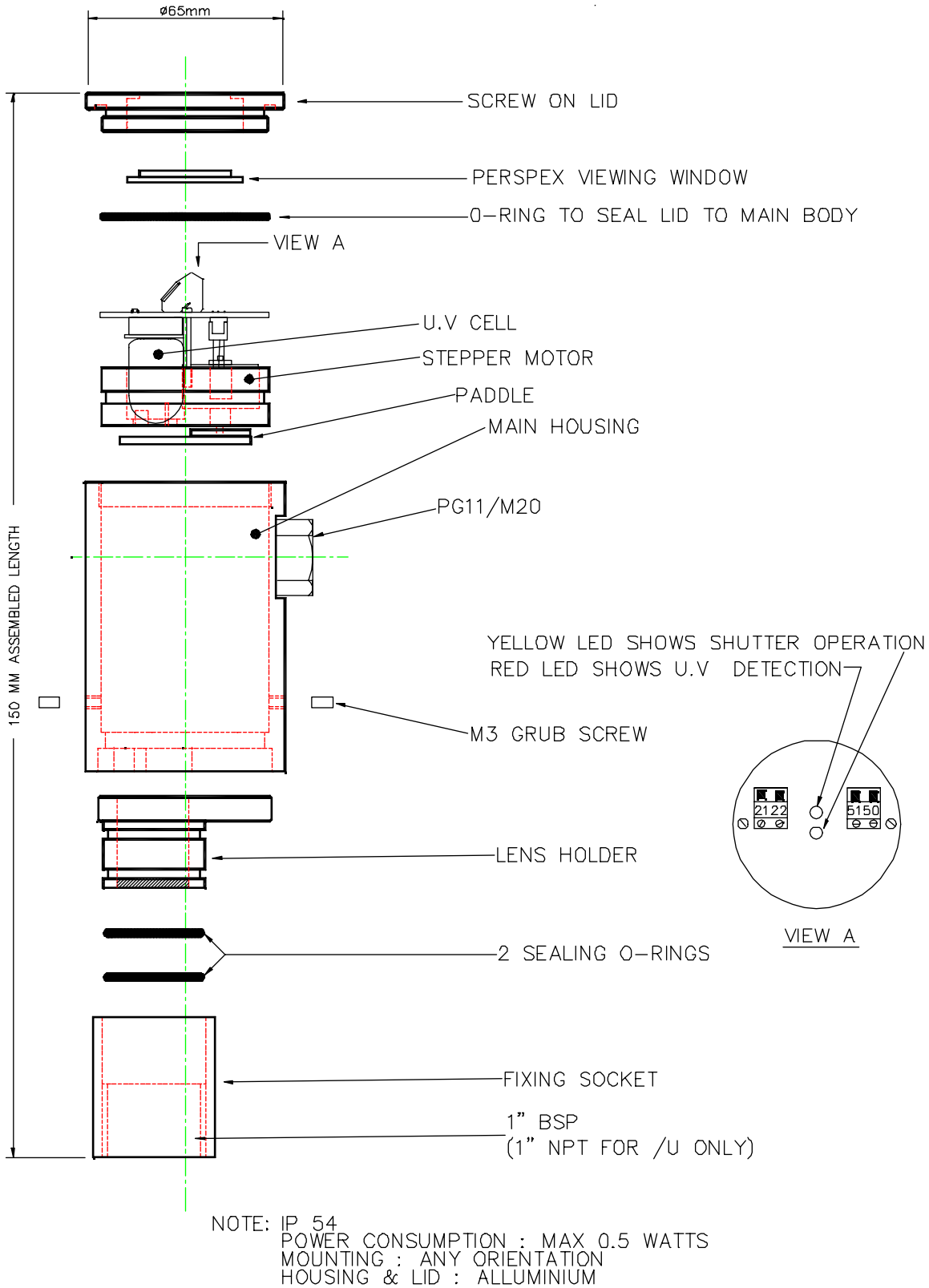

NOTE: IP 54
POWER CONSUMPTION : MAX 0.5 WATTS
MOUNTING : ANY ORIENTATION
HOUSING & LID : ALLUMINIUM

28:10:99/3406/JCF

2.14.3.3 Standard European UV Scanner - Side-viewing

Part Numbers: MM60004
MM60004/HS

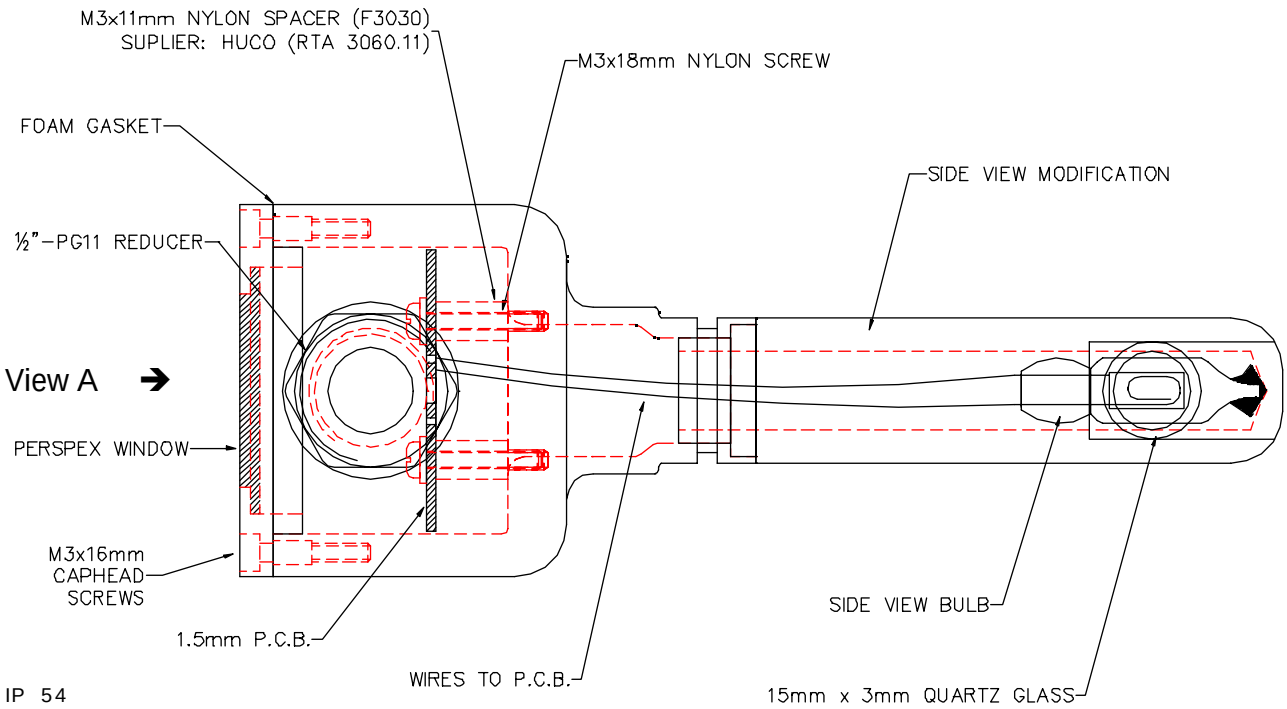

IP 54
HOUSING: ALUMINIUM
POWER COMSUMPTION: POWERED BY MK.6 MM
MOUNTING: ANY ORIENTATION AS LONG AS PHOTO TUBE FACES THE FLAME

Connections

Red	Terminal 51
Blue	Terminal 50
Black	Screen

View A
(with cover removed)

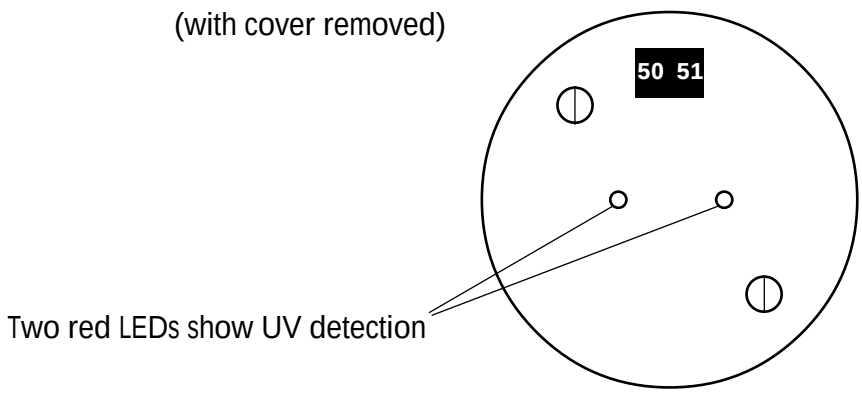

2.14.3.4 Standard North American UV Scanner - End viewing

Part Numbers: MM60004/U
MM60004/HSU

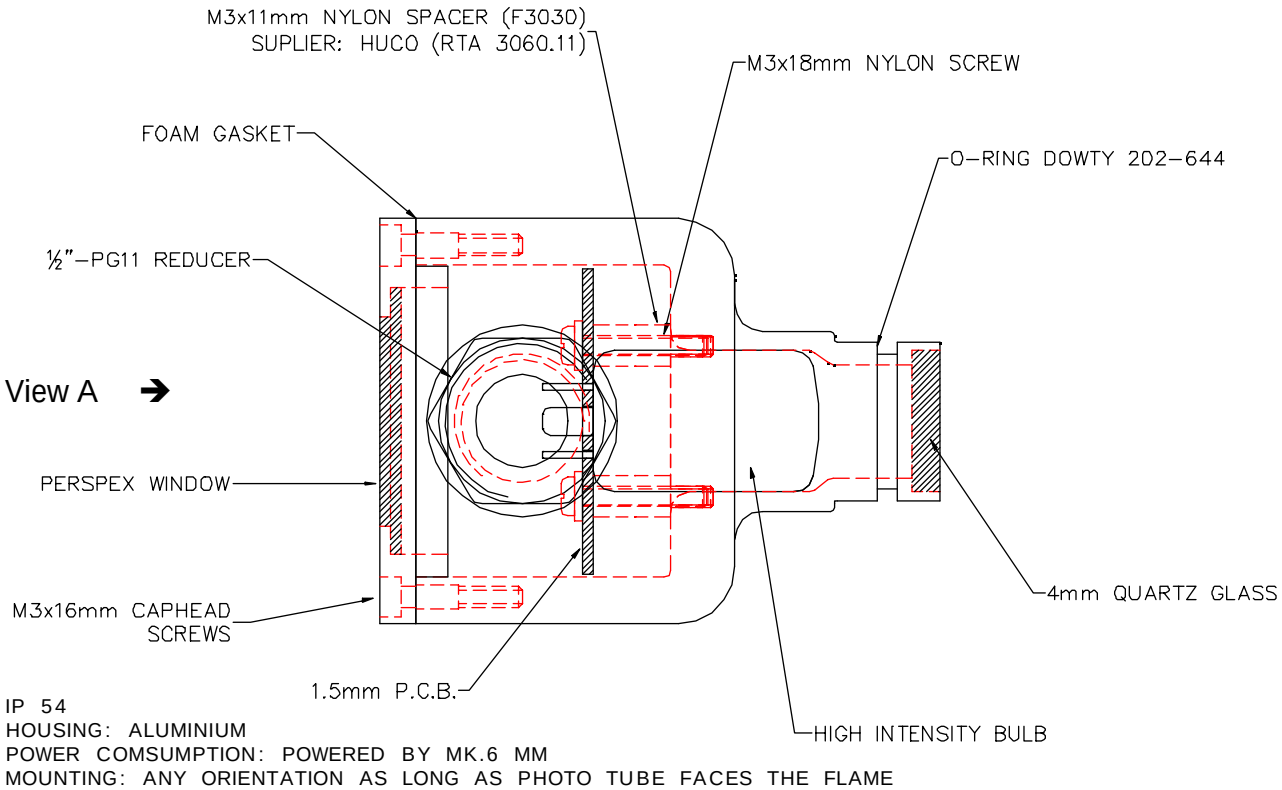

Connections

Red	Terminal 51
Blue	Terminal 50
Black	Screen

View A
(with cover removed)

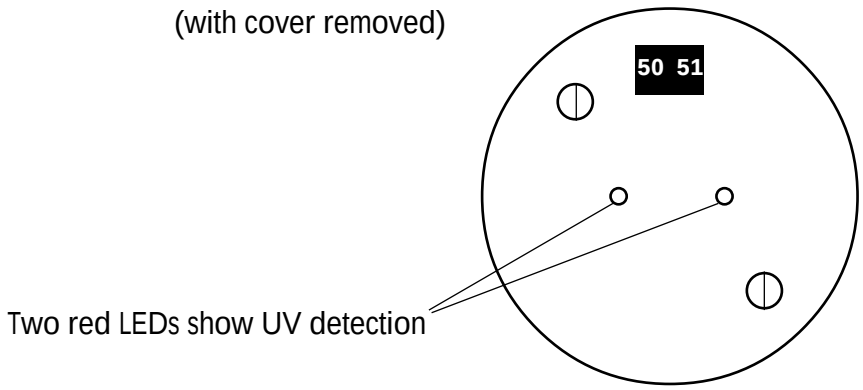

2.14.3.5 Selection of UV Scanner Types

Normal Sensitivity

If the distance from the UV scanner to the flame is upto 20 inches (500mm) the normal sensitivity UV scanner types may be used.

Normal Sensitivity Scanner Types:

MM60003	Self Check
MM60004	Standard (Side View)
MM60004/U	Standard (End View)

Dependant on the application (e.g. flame size/shape/intensity, flame obscruation etc.) where the signal strength is low, a high sensitivity scanner type may be necessary for distances below 20 inches.

High Sensitivity

If the distance from the UV scanner to the flame exceeds 20 inches (500mm) the high sensitivity UV scanner types are recommended.

High Sensitivity Scanner Types:

MM60003/HS	Self Check
MM60004/HS	Standard (Side View)
MM60004/HSU	Standard (End View)

The information above is based on the results of tests using a simulated pilot flame. The flame was simulated by means of a bunsen burner flame with a size of 100x20mm.

2.14.3.6 UV Self Adaptive Pulse Width Modulation

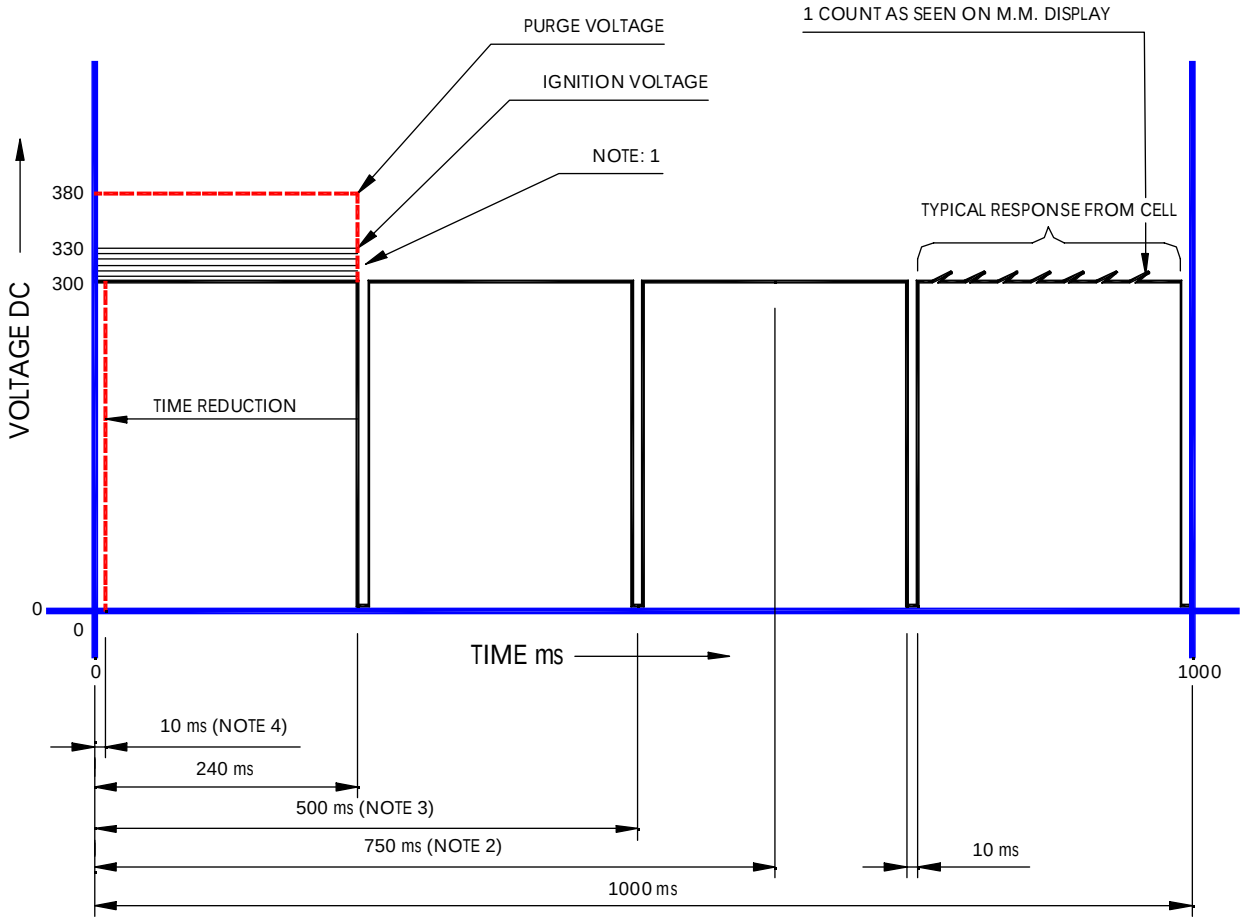

NOTE: 1
AFTER FIRST SAFETY TIME VOLTAGE IS REDUCED BY 5 VOLTS EVERY 500 ms, THIS IS PROVIDING THE FLAME SIGNAL IS ABOVE THE U.V. SETPOINT. IF BELOW THE U.V. THRESHOLD VOLTAGE WILL REMAIN AT 330 VOLTS. THE VOLTAGE WILL NOT INCREASE DURING MAIN FLAME OPERATION.

NOTE: 2
IF 5 COUNTS OR LESS HAVE BEEN DETECTED OVER ANY 730 ms PERIOD THE SYSTEM WILL INVOKE A LOCKOUT.
A SHORT CIRCUIT BETWEEN THE 2 WIRES CONNECTED TO THE U.V. WOULD PRODUCE 3 COUNTS OR LESS. THIS IS THE REASON FOR NOMINATING 5 COUNTS AS THE LOCKOUT LEVEL.

NOTE: 3
DURING NORMAL OPERATION 300 VOLTS WOULD BE APPLIED FOR A 240 ms PERIOD AFTER THE SECOND SAFETY TIME. THIS IS PROVIDING THE U.V. SIGNAL IS ABOVE THE U.V. SETPOINT WHICH IS SET AT 25 COUNTS. THE SETPOINT CAN NOT BE ADJUSTED.

NOTE: 4
WHEN THE SIGNAL IS ABOVE THE U.V. SETPOINT, THE TIME VOLTAGE IS APPLIED TO THE CELL IS REDUCED BY 1 ms EVERY 500 ms.
THE TIME WOULD CONTINUE TO REDUCE UNTIL A MINIMUM OF 10 ms HAS BEEN REACHED.
AT THIS STAGE NO FURTHER TIME IS DEDUCTED FROM THE VOLTAGE APPLIED TO THE CELL.

NOTE: 5
EVERY 500 ms THE RECORDED COUNTS ARE AVERAGED AND DISPLAYED ON THE M.M. SCREEN.

4113/19:04:00/SBK

2.14.4 ERROR CHECKING, SELF DIAGNOSTICS FAULT ANALYSIS, I.D. CODES.

Self Diagnostic Fault Identification Software.

The "Error Checking" software, which is included in every M.M. E.G.A. module, continually interrogates the system for component or data handling failure. This intensive self checking programme is inflicted on all peripherals such as positioning motors and load detectors as well as the main M.M./E.G.A. system hardware. The safety related areas, both hardware and software, have been examined and accepted for CE & UL.

Any error identified by the system is indicated by "ERROR" being displayed and the relevant error number. In the case of E.G.A. related faults, "ERROR EGA" is displayed with the corresponding error identification code.

2.14.4.1 Key to Errors Detected in Mk.6 M.M. System

E R ROR - confirms that error has been detected in the M.M. System.

Fault Type	Code No.	
CH1 Positioning Error	01	Check Wiring & Motor
CH2 Positioning Error	02	
CH3 Positioning Error	08	
CH4 Positioning Error	09	
CH1 Gain Error	41	Check Wiring & Potentiometers are zeroed correctly
CH2 Gain Error	42	
CH3 Gain Error	43	
CH4 Gain Error	46	
CH5 Error	80	Ch5 AC drive feedback signal incorrect
CH6 Error	81	Ch6 AC drive feedback signal incorrect See Section 2.14.2.10
Load Detector	03	- Open circuit on temp. sensor
CR1 Test Failure	40	- MM opened Burner Control Circuit, expects voltage on T85 to be removed within 60 sec.s (Parameter 6)
12V/5V Supply Error	44	- Internal 5V/12V supply outside limits. Check 12V on terminal 40 & 41.
Watchdog - Error CR2	45	- Unit hardware failure
A/D Converter Error	47	- Check 12V supply on terminals 40, 41
Twin Burner Communications Failed	100	- Flashing Error, see Section 2.3.1.3
Air Pressure Outside Limits	82	- During run mode actual air pressure outside limits, commissioned +/- 0.3 "wg (See Option 147).
Gas Pressure Sensor MM60008 optioned together with psi units.	110	- See Option 124 & 133 to 137. PSI display cannot be chosen for this sensor range.

2.14.4.2 Mk.6 Burner Control Lockouts

Lockout Message		Cause
Pre ign fail T55		Proof of closure switch opened during ignition sequence
Safety fail T54		No air pressure during Start/Firing
VPS air proving Fail		Leak detected during “air proving” part of VPS
VPS air zeroing Fail		When valve C opens, zero value outside limits (+0.5, -1.0”wg)
VPS gas proving fail		Leak detected during “gas proving” part of VPS
VPS gas pressure low		Gas pressure below minimum application pressure
No flame signal		No flame signal during ignition/firing
Simulated Flame		Flame present during burner off period
Fail safe relay fault	57	These terminals are self checked within the Mk6. If a voltage is detected when the output is off (and vice versa) a lockout occurs.
Vent valve output fault	62	
Main gas output 1 fault	61	
Main gas output 2 fault	60	
Start gas output fault	59	
Motor output fault	58	
Ignition output fault	63	
Shutter fault		UV signal detected during shutter operation on UV self check
Prolonged lockout reset		Prolonged voltage present on T56/Lockout reset button permanently pressed.
Pre ign timeout T55		Proof of closure switch not made after valves closed
Gas pressure low limit		Gas pressure low limit exceeded, option 136
Gas pressure high limit		Gas pressure high limit exceeded, option 137
Gas pressure low		Refer to section 2.14.2.6.2
UV short circuit		Connections to UV tube shorted
Oil pressure low limit		Oil pressure low limit exceeded, option 139
Oil pressure high limit		Oil pressure high limit exceeded, option 140
Purge air pressure low		Insufficient air pressure during purge (See option 141)
Option 141 incorrect		See option 141
Ram test failed		Internal fault diagnostics - contact Autoflame and report code displayed.
Prom test failed		
CPU test failed		
Watchdog fault 1a		
Watchdog fault 1b		
Watchdog fault 1c		
Watchdog fault 1d		
Watchdog fault 2a		
Watchdog fault 2b		
Watchdog fault 2c		
Watchdog fault 2d		
Input fault		
BC input short		
Lockout 199		
Lockout 201		
Lockout 202		

Gas Sensor Related

Sensor supply voltage	12V supply to sensor outside limits (11.75 - 12.25V)
Zero low gas sensor	see section 2.14.2.6.2 for zero limits
Zero high gas sensor	see section 2.14.2.6.2 for zero limits
Excessive VPS Operations	VPS has operated 3 times without burner firing
Signal dev - gas sensor	redundant signals from sensor do not match
Counts low - gas sensor	sensor fault - stuck on signal value
Counts high - gas sensor	sensor fault - stuck on reference value
Signal high - gas sensor	gas pressure exceeds maximum range value
Gas sensor (+ number)	sensor/Mk6 internal fault - report to Autoflame

Air Sensor Related

Sensor supply voltage	12V supply to sensor outside limits (11.75 - 12.25V)
Zero low air sensor	lower limit is -1.0”w.g.
Zero high air sensor	upper limit is +0.5"w.g.
Signal dev - air sensor	redundant signals from sensor do not match
Counts low - air sensor	sensor fault - stuck on signal value
Counts high - air sensor	sensor fault - stuck on reference value
Signal high - air sensor	air pressure exceeds maximum range value
Air sensor (+ number)	sensor/Mk6 internal fault - report to Autoflame

The “Error Checking” software, which is included in every M.M. E.G.A. module, continually interrogates the system for component or data handling failure. This intensive self checking programme is inflicted on all peripherals such as positioning motors and load detectors as well as the main M.M./E.G.A. system hardware. The safety related areas, both hardware and software, have been examined and accepted for CE & UL.

2.14.4.3 TROUBLESHOOTING

Gas/air sensor Diagnostic Codes

Shown at bottom of MM display if parameter 83=1

Example:

Gas	43	1001
42	42	1000
Air	50	969
51	51	970

Explanation:

	Average Signal	Pressure Signal	Reference Signal	
Gas {	Gas	43	1001	Sensor Channel 1
	42	42	1000	Sensor Channel 2
Air {	Air	50	969	Sensor Channel 1
	51	51	970	Sensor Channel 2

Typical reference signals are 1000±14.

Each sensor has two channels. Each channel gives out two values - a pressure signal and a reference signal. The values displayed are 'digitised' signals (range 0-1023). The two pressure signals should be the same. The two reference signals should be the same.

If the two pressure signals are different by more than 10 the averaged value will show 01 and not the average of the two signals.

With no pressure applied to the sensor the pressure signal value should be between 20 to 60. (Typically between 40 to 50).

AC Drive Diagnostic Codes

Shown at bottom right of AC drive display if parameter 83=1

Example:

0	0	250	253	254
0	0	100	120	121

Explanation:

	1	**2**	**3**	**4**	**5**
CH5 AC Drive	0	0	250	253	254
CH6 AC Drive	0	0	100	120	121

1 & **2** should normally be 0.

3 to **5** are digitised values, 0-255.

3 represents linearly (0-255) 4-20mA/0-10V the analog output from the MK6.
5 represents linearly (0-255) 0-20mA/0-10V the analog input into the MK6.

The Window error count value will increment if the difference between **4** & **5** is greater than 10. An MM error will occur if the count reaches 150. This takes approx 3 seconds.

The Disparity error count value - will increment up if the difference between **4** & **5** is greater than 15. An MM error will occur if the count reaches 50. This takes approx 1 second.

Error checking is only carried out when the burner is firing.

The correct feedback signals must be attained for purge & ignition to progress.
IE **5** must be as **4** ± 15.

UV Shutter Faults

UV Shutter Fault – there are two LED's on the back of the self-check UV, red indicates prescence of a flame, yellow indicates shutter operation. The red LED will flicker in the presnce of UV light, every 60 seconds the yellow LED will come on, indicating shutter closing, the red LED should then extinguish briefly. If this is not happening check wiring to self check UV sensor. Green wire = Terminal 22, Yellow wire = terminal 21, blue wire = terminal 50, red wire = terminal 51.

2.14.5 END USER DAY TO DAY OPERATION

2.14.5.1 Normal Run Operation

Upon initial selection of a commissioned fuel, a logo screen flashes up followed by the 'MM STATUS' display. The COM led flashes for five seconds.

To adjust the Required value press DISPLAY STATUS and use the third row accordingly.

To adjust the second/reduced required value press DISPLAY STATUS and use the fourth row buttons accordingly.

The range of the required value is limited according to the type of sensor being used (See Option 1).
Note that if a DTI is connected and being used to set the required value it will not be possible to adjust the required value from the front facia. In the event of the MM losing communication with the DTI (eg DTI powered down) the MM will run standalone after approximately 30 seconds. When the MM is running standalone the required value can be set locally on the front facia. (Any previous DTI disable command will also be ineffective).

If the burner control circuit is closed the burner system will sequence through the burner start up procedure. The system purges and ignites, and twenty seconds (nominal) after ignition the system modulates.

Values are displayed according to the selected screen. There are a number of possible screens as shown on the next page. To select one of the display modes just press:

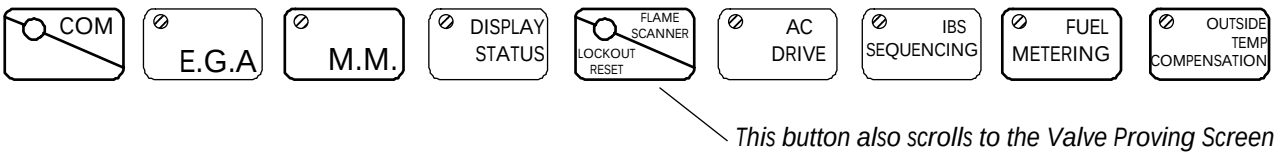

The respective l.e.d. will remain illuminated to indicate which mode is selected. The COM and E.G.A. modes are only selectable if an E.G.A. is optioned on the system.

In the event of the system being powered down, these selections will be memorised as is all commissioning data, Options and required value. During normal run operation the RUN led is on all the time. When no fuels are selected only the RUN led remains illuminated.

If an E.G.A. is operative on the system it will calibrate every time the burner starts and stops. When COM or EGA display modes are selected CAL is displayed when the EGA is calibrating. If the E.G.A. is cooling, COOL is displayed. If the burner is not firing, EGA is displayed. When the burner is firing both modes show E.G.A.. if the Actual value has not reached the value at which trimming is permitted. (See Option 28.) If an E.G.A. error has occurred the error code number is displayed if either of EGA or COM modes are selected.

The software version number can be displayed by by pressing the Top CH1 buttons simultaneously, when in the MM display mode.

Several different displays are available to provide the operator with unambiguous information through start-up and normal operation.
Selectable screens provide the following information:

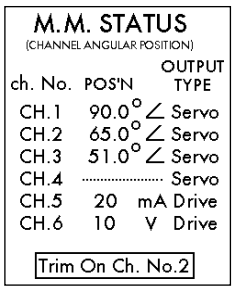

M.M. Status

Shows the actual positions of air and fuel valves as well as fan speed information from inverters, which is expressed as a
4-20mA or 0-10V signal.

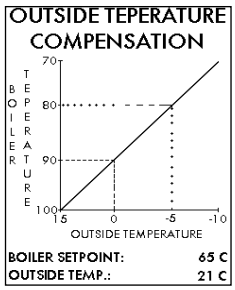

Outside Temperature Compensation

This screen is a graphic display showing the currently pre set relationship between boiler temperature set point and outside ambient temperature. This relationship can be changed by the operator over a wide temperature range.

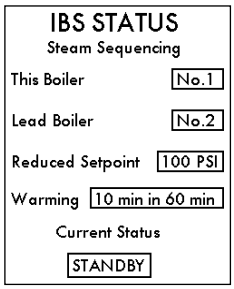

IBS Status

For a multi boiler installation, this screen shows which is the lead boiler plus information on temperature and pressure set points.

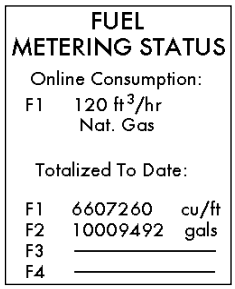

Fuel Metering Status

This screen displays which fuel is currently selected, the consumption at this point in time and the total fuel used to date.

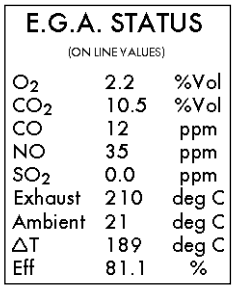

EGA On Line Values

When an Exhaust Gas Analyser (EGA) is included in the system,this screen shows the actual values of the gases being measured in the flue plus the exhaust gas temperature, ambient temperature, dT, and efficiency. A futher screen shows the commissioned values.

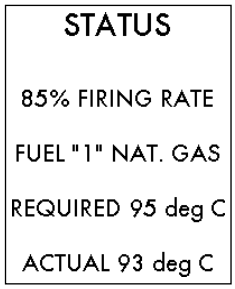

System Status

This screen shows the present firing rate, which fuel is being used, the required set point temperature and the actual temperature.

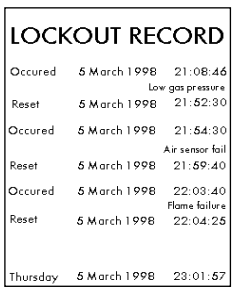

Lockout History.

This screen gives a real time log of the last 15 lockouts . Details include time, date and a brief discription.

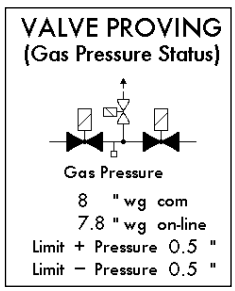

Valve Proving

This screen displays the positions of fuel valves, open or closed during pressure proving prior to burner firing.
During Run the on-line and commissioned gas pressures are displayed with +/- limits.

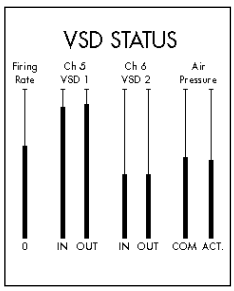

Variable Speed Drive

There are two control channels available for driving inverters. These can be 0-10 volts or 4-20 mA as required. This screen depicts graphically the input & output signals to the Variable Speed Drives.
The actual wind box pressure is shown against the commissioned data.

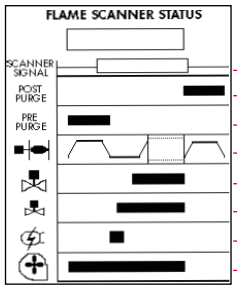

Flame Scanner Status, Screen Menu

- Flame Scanner Signal.
- Post Purge.
- Pre Purge.
- Air Damper position.
- Main fuel valve.
- Pilot/start gas valve.
- Ignition.
- Operation of fan.

2.14.5.2 Adjusting Clock Settings, Contrast and Actual Load Reading

Setting Time & Date

To adjust the time and date settings go into COM mode. (Power down the unit and restart. The COM light will be flashing and you have 5 seconds to press it.)

'ENTER PASSWORD' screen is displayed. Set password to: **10 10**, Press CLOSE

'Set Clock' screen is displayed:

SET CLOCK	
DAY	MONDAY
DATE	17
MONTH	NOVEMBER
YEAR	97
HOURS	12
MINUTES	30

24 hour clock

To adjust the values use the corresponding buttons.

When finished press the flashing ENTER MEMORY button to submit to memory.

Adjusting the Screen Contrast

Hold down any of the screen select buttons,

OUTSIDE TEMP COMPENSATION | FUEL METERING | IBS SEQUENCING | AC DRIVE | FLAME SCANNER LOCKOUT RESET | DISPLAY STATUS | E.G.A | M.M.

and then use the top row to adjust the contrast accordingly.

Calibrating Actual Load Reading

A facility exists to adjust small errors in the actual pressure or temperature displayed on the status screen.

To increase the value press RUN and the Ch3 simultaneously.

To decrease press and RUN the CH3 .

2.14.5.3 EPROM Version Numbers

To display the software version number select the MM Display screen, then press Channel 1 Up and Down buttons simultaneously.

EPROM
VERSION NUMBERS

BC	3.03
MM	3.03
DI	3.04

Software version numbers are also displayed on the password screen when in commissioning mode.

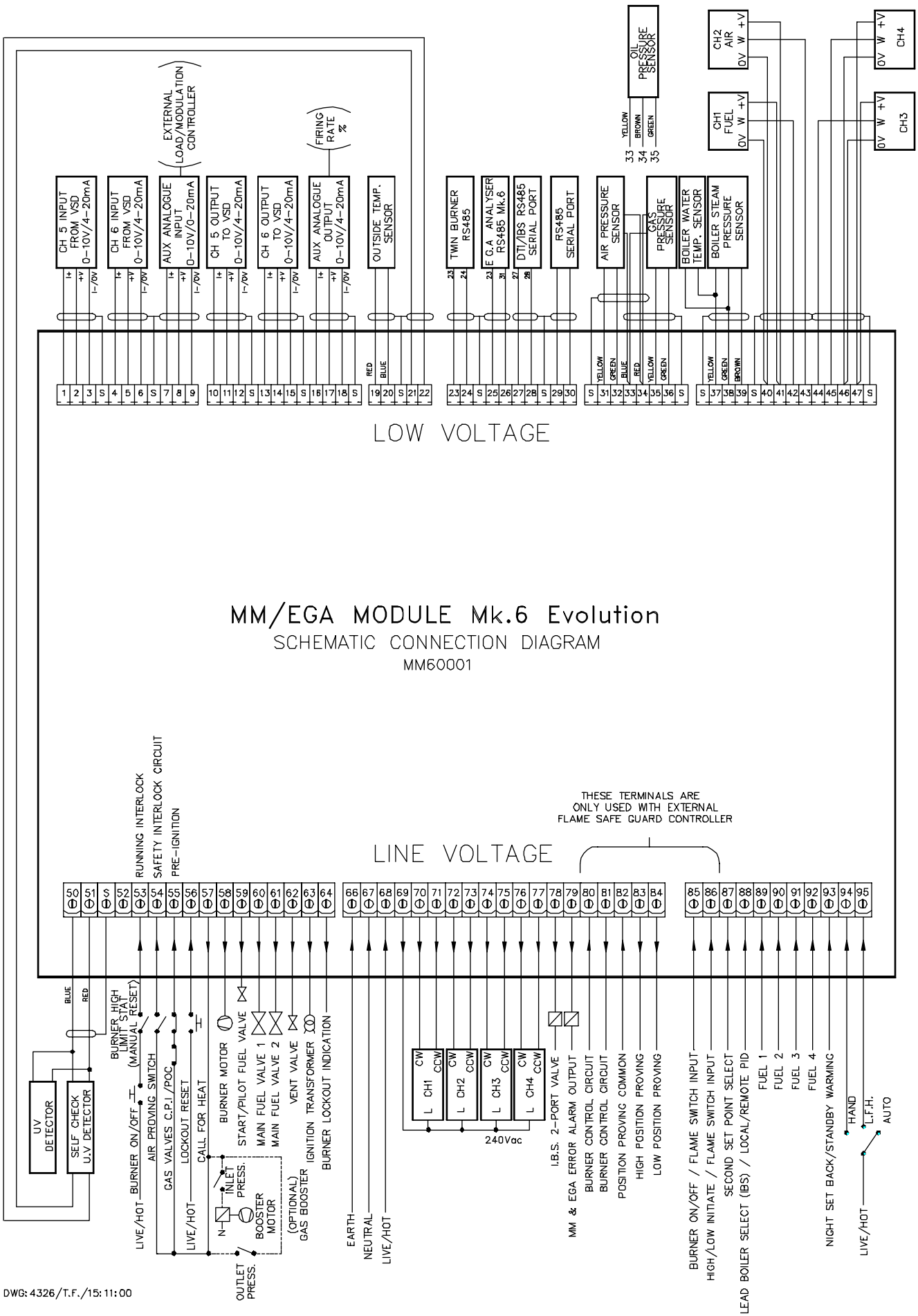
CH 5 INPUT FROM VSD 0-10V/4-20mA
CH 6 INPUT FROM VSD 0-10V/4-20mA
AUX ANALOGUE INPUT 0-10V/0-20mA
EXTERNAL LOAD/MODULATION CONTROLLER
CH 5 OUTPUT TO VSD 0-10V/4-20mA
CH 6 OUTPUT TO VSD 0-10V/4-20mA
AUX ANALOGUE OUTPUT 0-10V/4-20mA
FIRING RATE %
OUTSIDE TEMP. SENSOR
TWIN BURNER RS485
E.G.A. ANALYSER RS485 Mk.6
DTI/IBS RS485 SERIAL PORT
RS485 SERIAL PORT
AIR PRESSURE SENSOR
GAS PRESSURE SENSOR
BOILER WATER TEMP. SENSOR
BOILER STEAM PRESSURE SENSOR
OIL PRESSURE SENSOR
CH2 AIR
CH1 FUEL
CH4
CH3
LOW VOLTAGE
MM/EGA MODULE Mk.6 Evolution
SCHEMATIC CONNECTION DIAGRAM
MM60001
RUNNING INTERLOCK
SAFETY INTERLOCK CIRCUIT
PRE-IGNITION
THESE TERMINALS ARE ONLY USED WITH EXTERNAL FLAME SAFE GUARD CONTROLLER
LINE VOLTAGE
UV DETECTOR
SELF CHECK U.V DETECTOR
BURNER HIGH LIMIT STAT (MANUAL RESET)
BURNER ON/OFF
AIR PROVING SWITCH
GAS VALVES C.P.I./POC
LOCKOUT RESET
CALL FOR HEAT
BURNER MOTOR
START/PILOT FUEL VALVE
MAIN FUEL VALVE 1
MAIN FUEL VALVE 2
VENT VALVE
IGNITION TRANSFORMER
BURNER LOCKOUT INDICATION
INLET PRESS.
BOOSTER MOTOR
(OPTIONAL) GAS BOOSTER
OUTLET PRESS.
EARTH
NEUTRAL
LIVE/HOT
240Vac
I.B.S. 2-PORT VALVE
MM & EGA ERROR ALARM OUTPUT
BURNER CONTROL CIRCUIT
BURNER CONTROL CIRCUIT
POSITION PROVING COMMON
HIGH POSITION PROVING
LOW POSITION PROVING
BURNER ON/OFF / FLAME SWITCH INPUT
HIGH/LOW INITIATE / FLAME SWITCH INPUT
SECOND SET POINT SELECT
LEAD BOILER SELECT (IBS) / LOCAL/REMOTE PID
FUEL 1
FUEL 2
FUEL 3
FUEL 4
NIGHT SET BACK/STANDBY WARMING
HAND
L.F.H.
AUTO
DWG: 4326/T.F./15:11:00

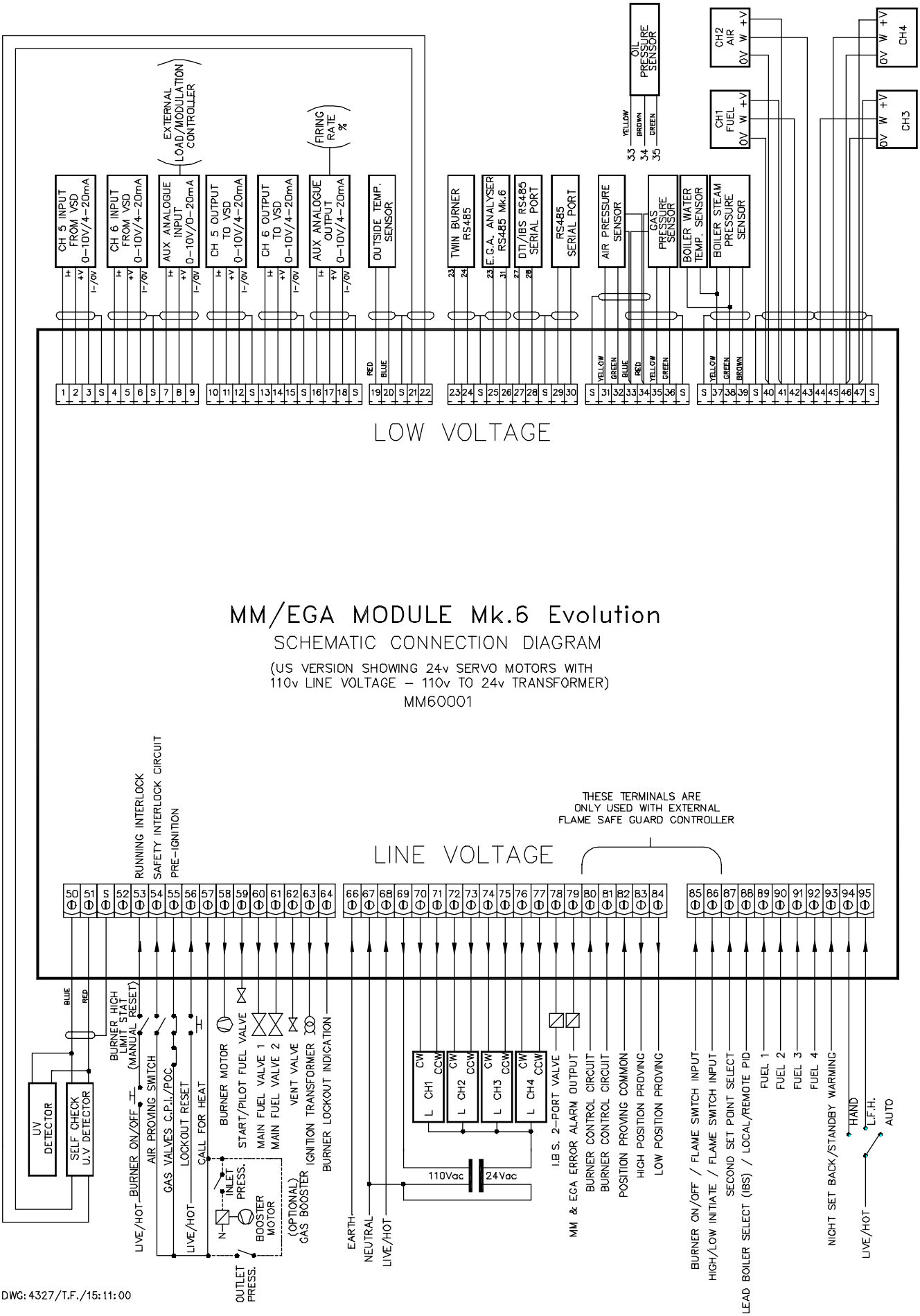
CH 5 INPUT FROM VSD 0-10V/4-20mA
CH 6 INPUT FROM VSD 0-10V/4-20mA
AUX ANALOGUE INPUT 0-10V/0-20mA
EXTERNAL LOAD/MODULATION CONTROLLER
CH 5 OUTPUT TO VSD 0-10V/4-20mA
CH 6 OUTPUT TO VSD 0-10V/4-20mA
AUX ANALOGUE OUTPUT 0-10V/4-20mA
FIRING RATE %
OUTSIDE TEMP. SENSOR
TWIN BURNER RS485
E.G.A. ANALYSER RS485 Mk.6
DTI/IBS RS485 SERIAL PORT
RS485 SERIAL PORT
AIR PRESSURE SENSOR
GAS PRESSURE SENSOR
BOILER WATER TEMP. SENSOR
BOILER STEAM PRESSURE SENSOR
OIL PRESSURE SENSOR
CH2 AIR
CH1 FUEL
CH4
CH3
LOW VOLTAGE
MM/EGA MODULE Mk.6 Evolution
SCHEMATIC CONNECTION DIAGRAM
(US VERSION SHOWING 24v SERVO MOTORS WITH
110v LINE VOLTAGE – 110v TO 24v TRANSFORMER)
MM60001
RUNNING INTERLOCK
SAFETY INTERLOCK CIRCUIT
PRE-IGNITION
THESE TERMINALS ARE ONLY USED WITH EXTERNAL FLAME SAFE GUARD CONTROLLER
LINE VOLTAGE
UV DETECTOR
SELF CHECK U.V DETECTOR
BURNER HIGH LIMIT STAT (MANUAL RESET)
BURNER ON/OFF
AIR PROVING SWITCH
GAS VALVES C.P.I./POC
LOCKOUT RESET
CALL FOR HEAT
BURNER MOTOR
START/PILOT FUEL VALVE
MAIN FUEL VALVE 1
MAIN FUEL VALVE 2
VENT VALVE
IGNITION TRANSFORMER
BURNER LOCKOUT INDICATION
INLET PRESS.
BOOSTER MOTOR
(OPTIONAL) GAS BOOSTER
OUTLET PRESS.
LIVE/HOT
EARTH
NEUTRAL
110Vac
24Vac
I.B.S. 2-PORT VALVE
MM & EGA ERROR ALARM OUTPUT
BURNER CONTROL CIRCUIT
POSITION PROVING COMMON
HIGH POSITION PROVING
LOW POSITION PROVING
BURNER ON/OFF / FLAME SWITCH INPUT
HIGH/LOW INITIATE / FLAME SWITCH INPUT
SECOND SET POINT SELECT
LEAD BOILER SELECT (IBS) / LOCAL/REMOTE PID
FUEL 1
FUEL 2
FUEL 3
FUEL 4
NIGHT SET BACK/STANDBY WARMING
HAND
L.F.H.
AUTO
DWG: 4327/T.F./15:11:00

Autoflame Boiler Steam Pressure Sensor
Part No. MM10008/9/10

Connections		
Sensor	**Mk6/Mini Mk6**	**Mini Mk5**
Green	38	61
Yellow	37	OV
Brown	39	+V
White	unused	
Screen	S	38

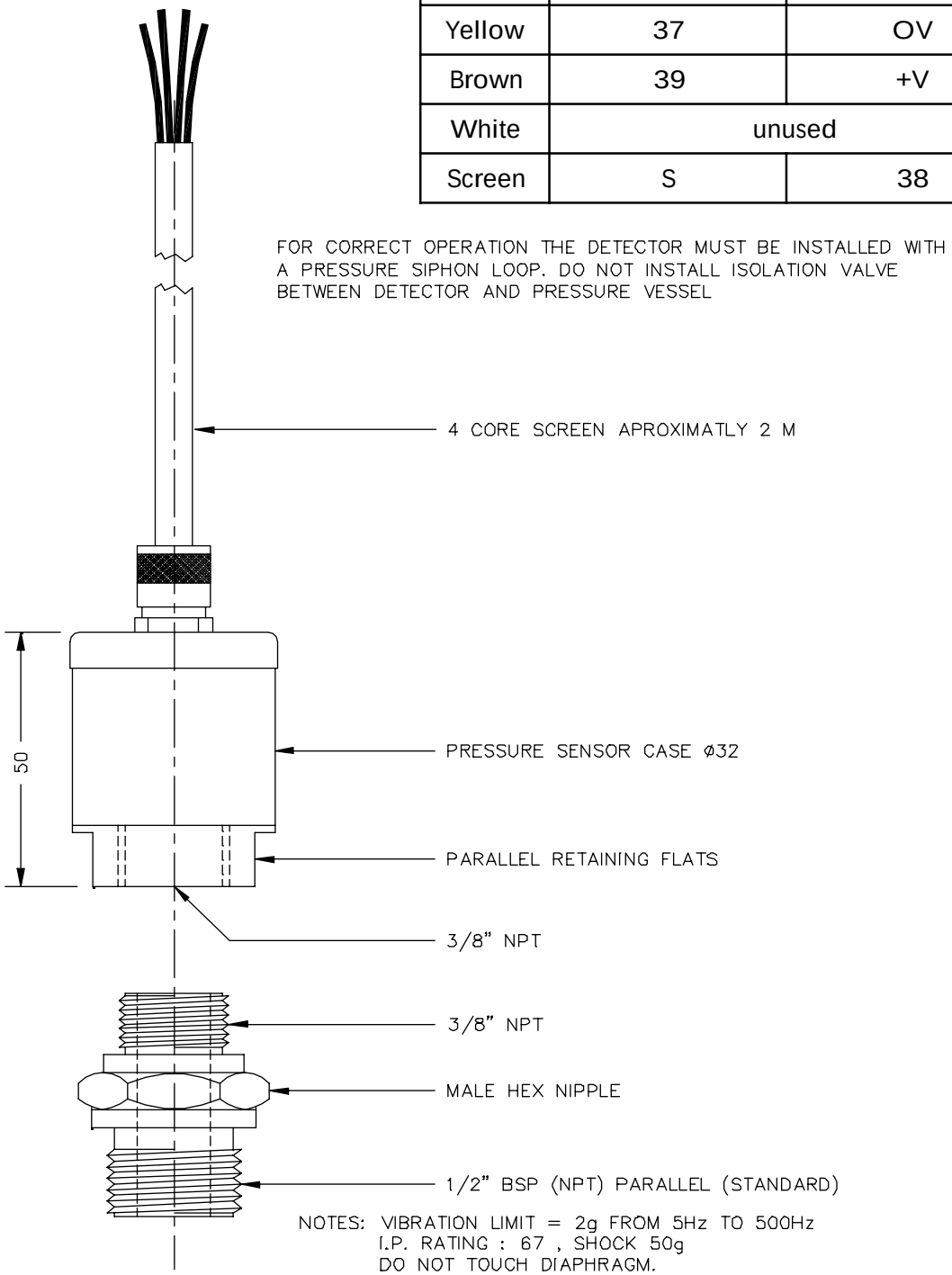

NB: Any physical damage to the stainless steel diaphram may result in sensor failure. The maximum depth that a male fitting can be screwed into the sensor is 10mm.

NOTES: VIBRATION LIMIT = 2g FROM 5Hz TO 500Hz
I.P. RATING : 67 , SHOCK 50g
DO NOT TOUCH DIAPHRAGM.
DO NOT USE CASE TO TIGHTEN PRESSURE CONNECTION.
CABLE TYPE: 3-CORE SCREENED, 7/0.2 PVC INSULATED
OVERALL BRAID, PVC SHEATHED.
MAX. STORAGE TEMP. -55 TO +100 DEG. C
MAX. OPERATING TEMP. -40 TO +100 DEG. C
MEDIA TEMP (STEAM) -40 TO 125 DEG. C

20: 7: 99/3294/TF

Pressure Sensor	Part no.	Actual Range	Proof Pressure
0-18 Bar	MM10008	0 - 23.0 bar (30 - 330 P.S.I.)	450 psi
0-30 Bar	MM10009	0 - 38.0 bar (30 - 550 P.S.I.)	750 psi
0-3.0 Bar	MM10010	0 - 3.80 bar (3.0 - 55.0 P.S.I.)	200 psi

APPLICATION OF CONTROL BOXES
WITH MM/EGA MODULE Mk.6

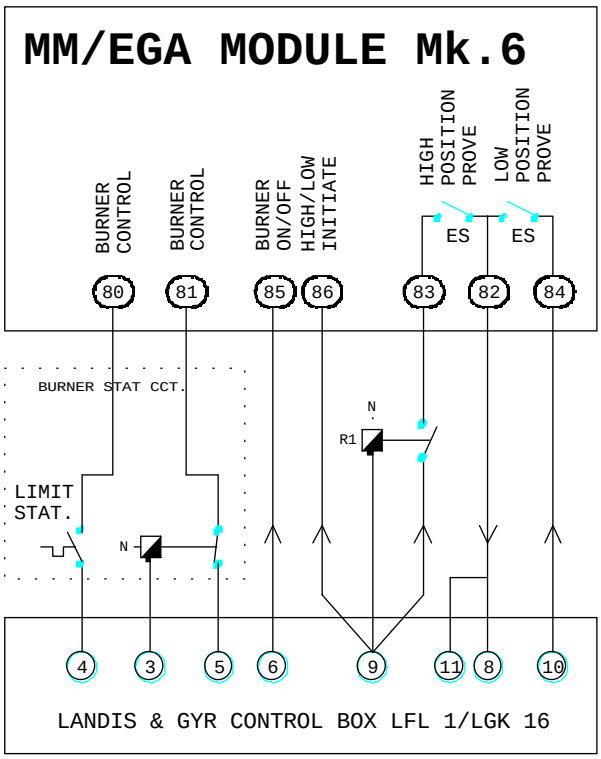

NOTE: R1 = EXTERNAL RELAY TO
PREVENT BACK FEEDS.

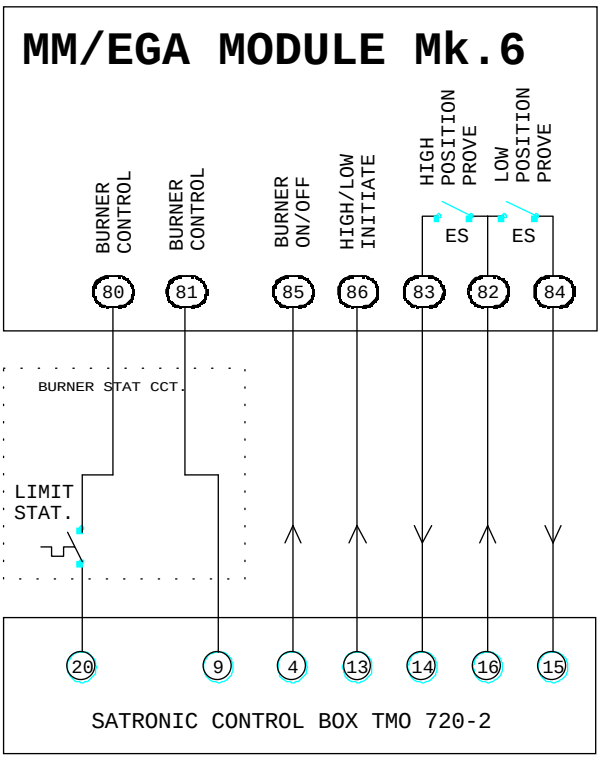

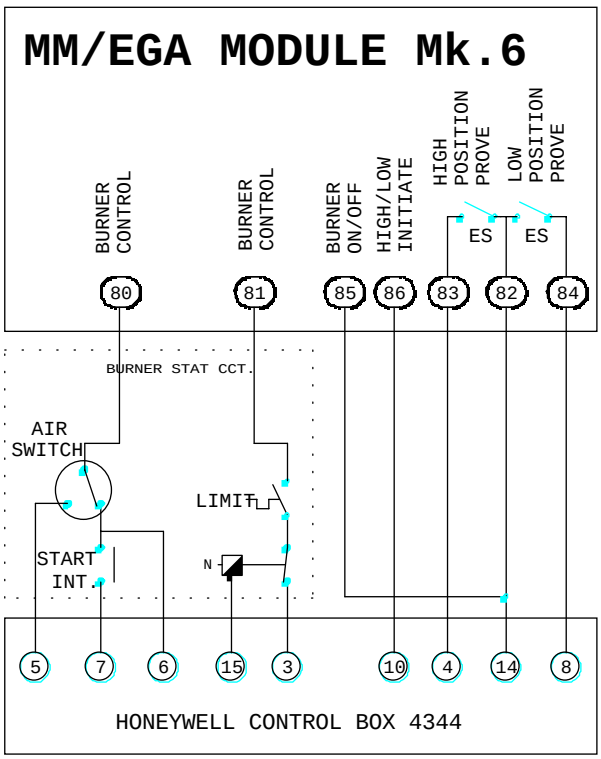

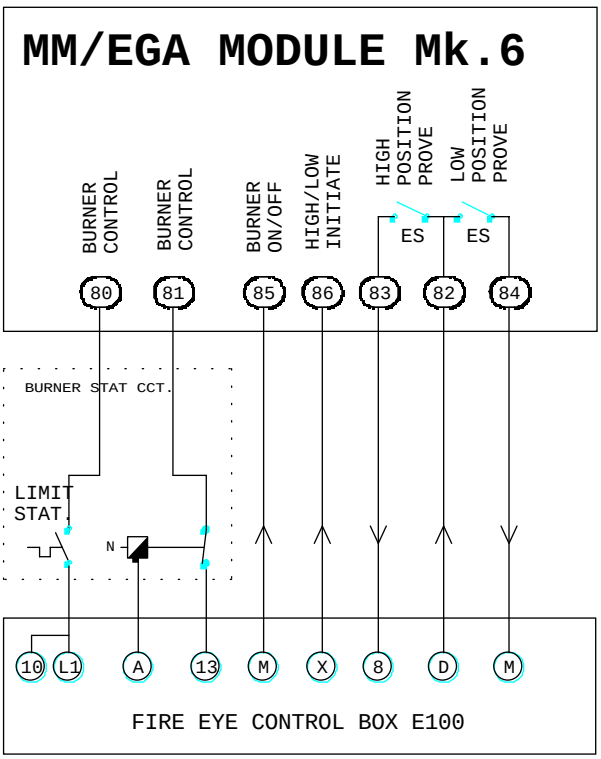

THE ABOVE ARE THE RECOMMENDED INTERFACE CONNECTIONS. PLEASE REFER TO AUTOFLAME ENGINEERING IF ANY DEVIATIONS FROM THESE ARE REQUIRED

GENERAL NOTES:

◪ = EXTERNAL RELAY

ES = ELECTRONIC SWITCH

ALL RELAYS SHOWN AT MAINS VOLTAGE UNLESS STATED OTHERWISE.

10:10:97/3399/NPG

APPLICATION OF CONTROL BOXES
WITH MM/EGA MODULE Mk.6

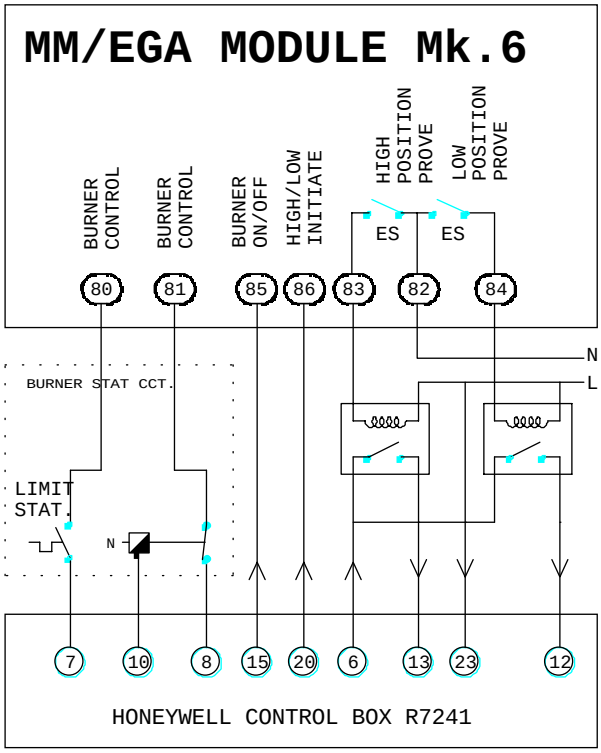

NOTE: COIL CURRENT 10mA MAX.

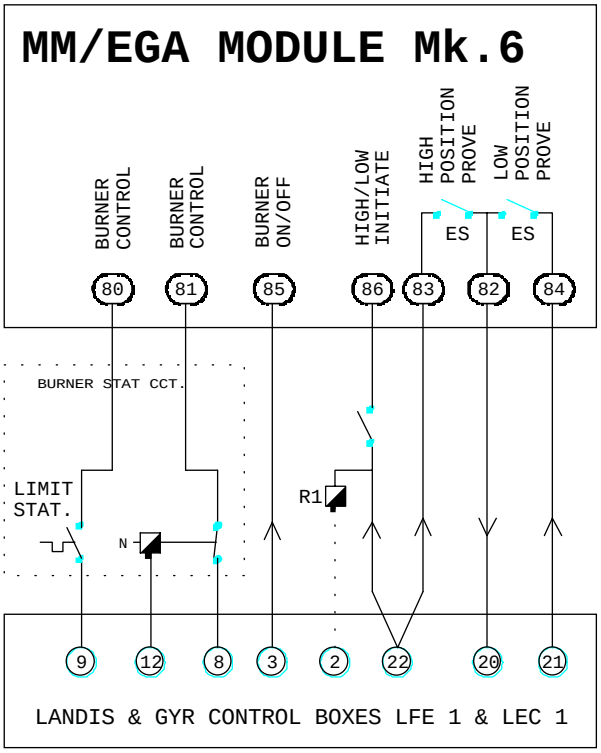

NOTE: R1 = EXTERNAL RELAY TO
PREVENT BACK FEEDS.

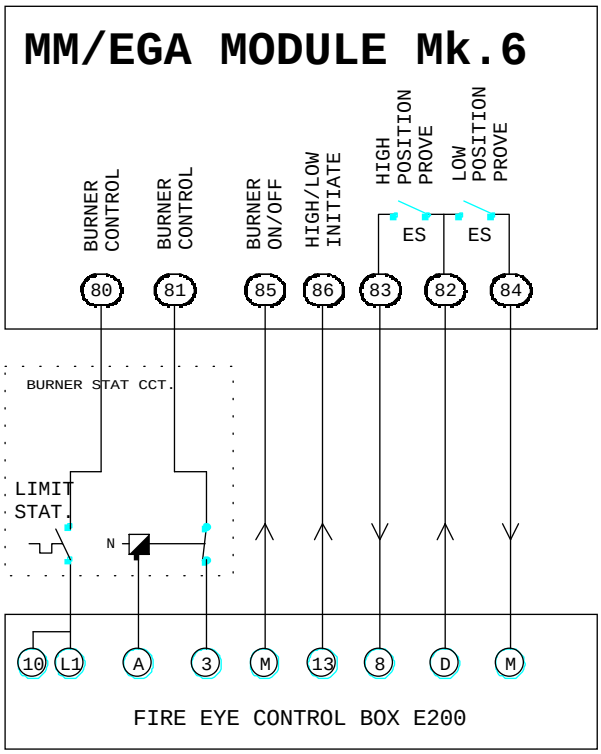

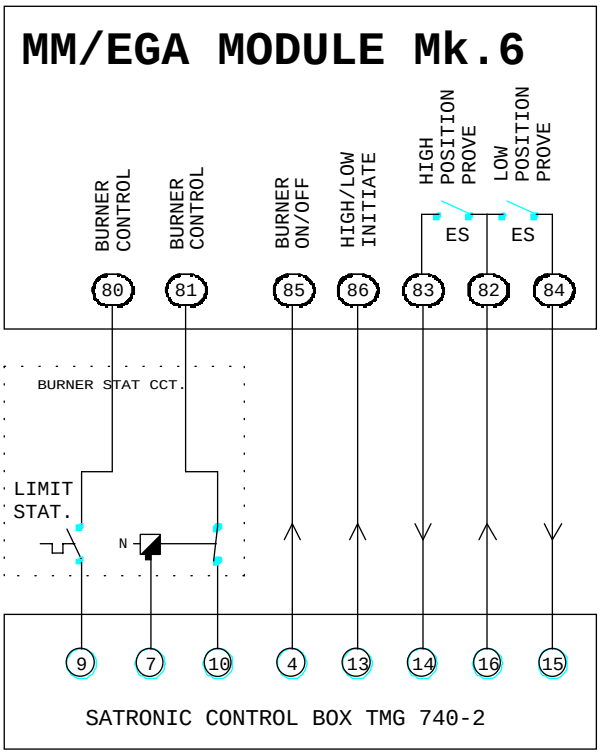

THE ABOVE ARE THE RECOMMENDED INTERFACE CONNECTIONS. PLEASE REFER TO AUTOFLAME ENGINEERING IF ANY DEVIATIONS FROM THESE ARE REQUIRED

GENERAL NOTES:

◪ = EXTERNAL RELAY

ES = ELECTRONIC SWITCH

ALL RELAYS SHOWN AT MAINS VOLTAGE UNLESS STATED OTHERWISE.

10:10:97/3400/NPG

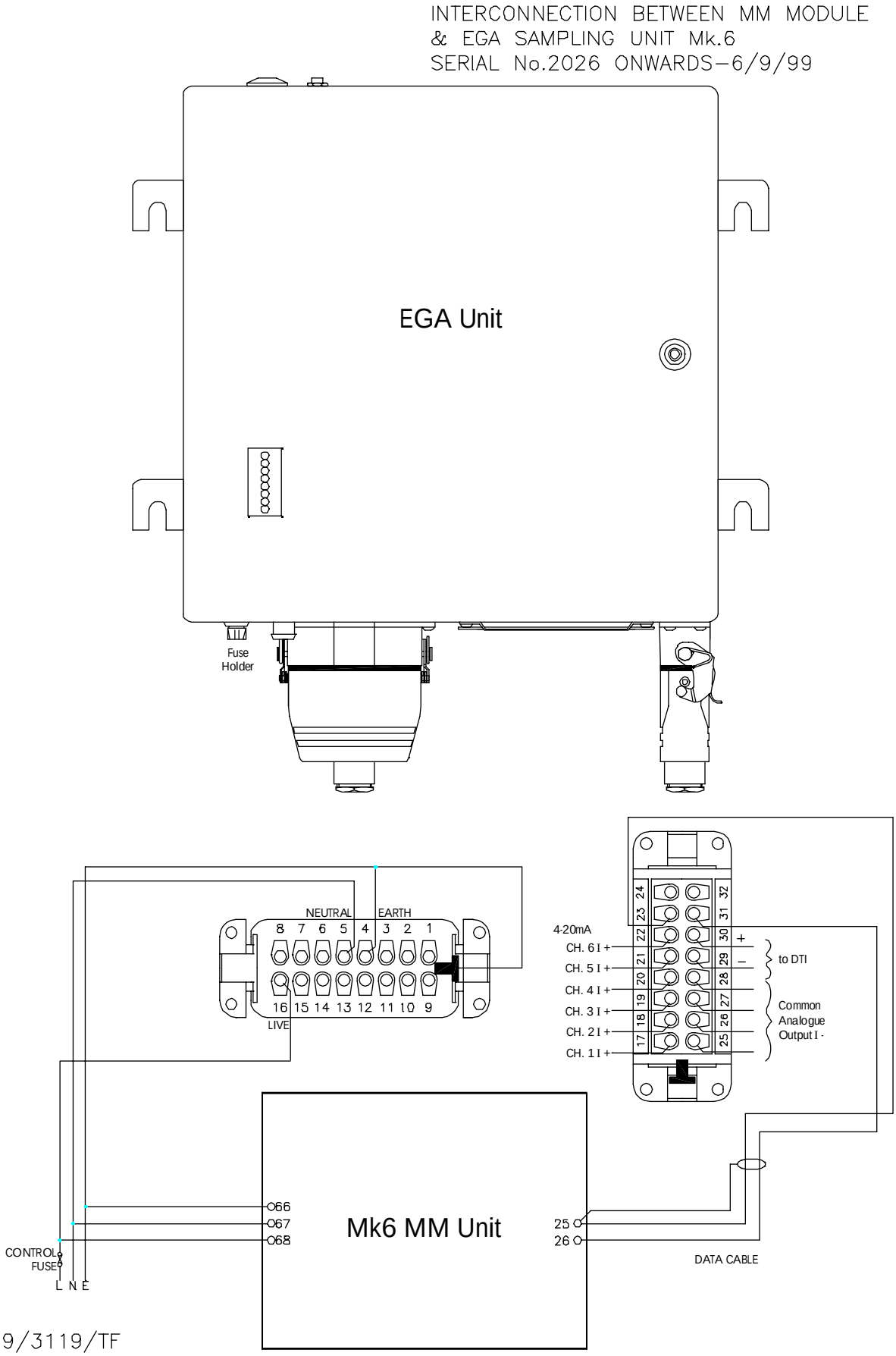
INTERCONNECTION BETWEEN MM MODULE
& EGA SAMPLING UNIT Mk.6
SERIAL No.2026 ONWARDS–6/9/99
EGA Unit
Fuse
Holder
NEUTRAL
EARTH
8 7 6 5 4 3 2 1
16 15 14 13 12 11 10 9
LIVE
4-20mA
CH. 6 I +
CH. 5 I +
CH. 4 I +
CH. 3 I +
CH. 2 I +
CH. 1 I +
to DTI
Common
Analogue
Output I -
Mk6 MM Unit
66
67
68
25
26
CONTROL
FUSE
L N E
DATA CABLE
6/7/99/3119/TF

INTERCONNECTIONS BETWEEN TWO M.M. MODULES & ONE E.G.A. UNIT VIA THE SPLITTER INTERFACE MODULE

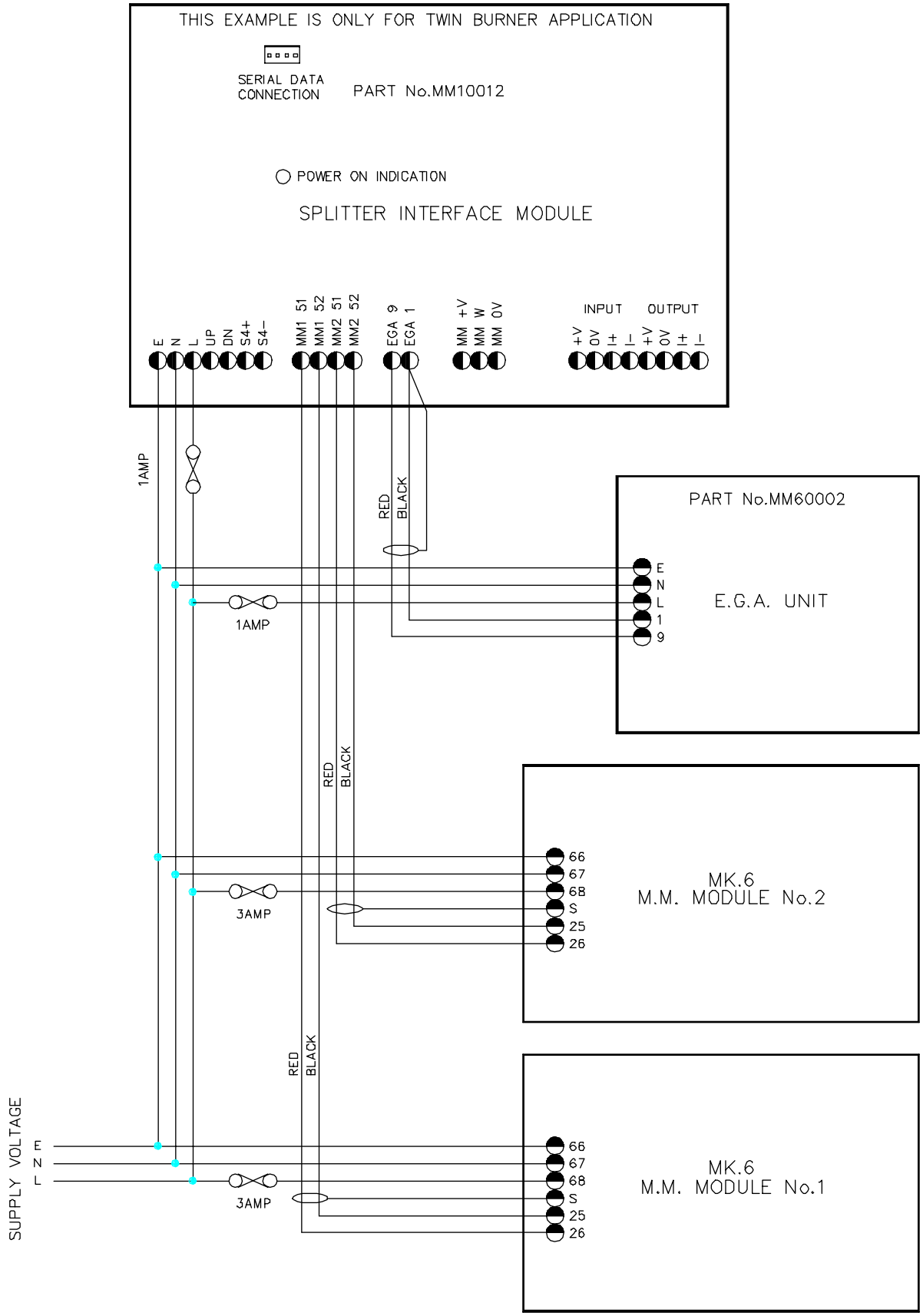

06/10/97/3401/NPG

INTERCONNECTION DIAGRAM FOR APPLICATION TO CONVERT O2 AND TEMPERATURE SIGNALS FOR USE WITH MM VIA O2 INTERFACE MODULE

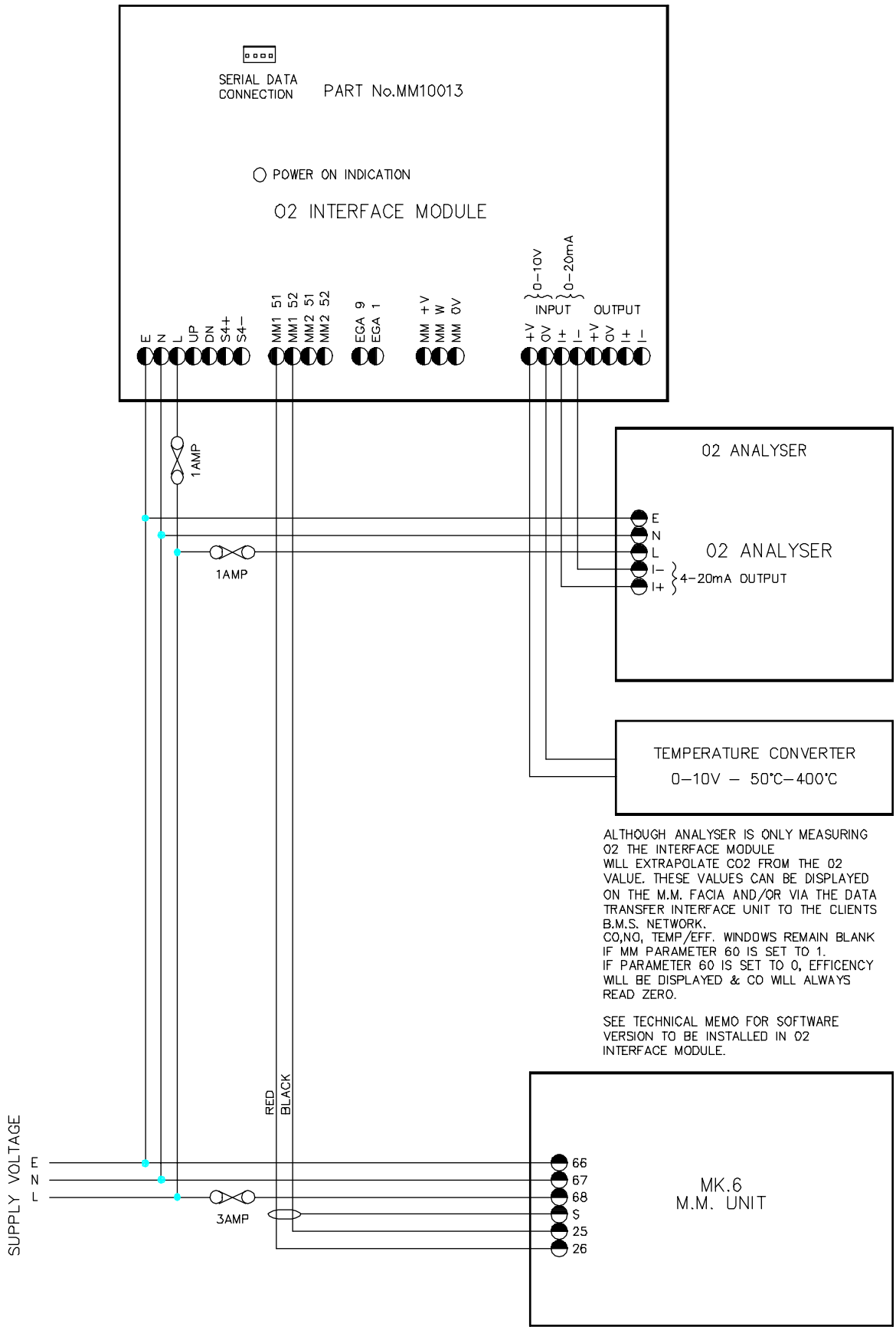

06/10/97/3402/NPG

2.14.7 TWIN BURNER OPERATION

2.14.7.1 Twin Burner Commissioning

Option numbers 14 and 33 have to be set to correctly implement twin burner operation. Refer to Option section. For commissioning purposes it is easiest to set option 14 on each M.M. to value 0, and commission each burner individually. It is the commissioning engineer's responsibility to ensure that no adverse effects are caused as a result of this. Particularly, stress to a boiler not designed to have only one burner firing. If this is the case then both burners can be commissioned simultaneously. AFTER COMMISSIONING SET OPTION 14 TO IT'S TWIN BURNER VALUE ON BOTH M.M.s

Note: On twin burner applications if Option 14 = 1 then the CR relays of each M.M. should be wired in series. Also in the event of one of the burners locking out the controls circuit to the other burner must be opened.

Before commencing commissioning set the following Options: (Refer to Options Section for more details)

Option 33:

Set value of left hand burner to its appropriate Identification number e.g. 1. Set the right hand burner to the Identification of the left hand burner +1 i.e. 2.

Option 33 will have to be interpreted if the boilers are numbered right to left. The details here are for left to right numbering.

Other options may be set as usual.

Normal Operation:

Only the odd numbered M.M. needs an input on terminal 88 to make this boiler lead boiler. If a connection is made to the even number M.M. it will be ignored. The same applies for the hand/auto/low flame hold inputs 94, 95, i.e. they do not need any connection on the even number M.M. if Option 14 = 1. If Option 14 = 2 then 94 and 95 should be wired as normal for hand operation.

The even number burner always takes its load index from the odd number burner including when in 'Hand' mode. If communications between the two burners fail, each M.M. will open its CR relay and approximately every three seconds the displays on each M.M. show ERR 100 to indicate communication failure if Option 14 = 1. If Option 14 = 2 then the 2 M.M.s run stand-alone.

When entering the flow metering for sequencing purposes it is necessary to put both M.M.s into the "Flow Metering" mode at the same time,

i.e. Start up both burners, wait until both are modulating then press 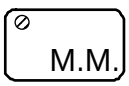

and 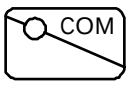

on one of the M.M. units:

Within 10 seconds press COM and M.M. on the other M.M.

Keep the firing rate of each burner similar when entering profile, i.e. do ‘point 1’ on each M.M. then ‘point 2’ on each M.M. etc. This is important as the boiler may be susceptible to stress if one tube is fired at a different rate to the other. The required and actual values on the even numbered M.M. will mimic the values on the odd number M.M.

The CR1 relay of the even numbered M.M. follows the odd number M.M.

If Option 14 = 1 then the CR1 relay of both M.M.s will open if there is a period of more than 10 seconds when one M.M. is modulating and the other is not.

One M.M. unit will remain at the low fire position until the other unit is at the low fire position before outputting the low position interlock to the burner control box.

The load detector input in the even numbered M.M. can be left open circuit, it will not be error checked.

If an error condition arises on one or other of the M.M. units and Option 14 = 1 then the other unit will open its CR1 relay and flash ERR 100.

INTERCONNECTION BETWEEN MM/EGA
MODULES Mk.6

DIAGRAM SHOWN FOR TWIN BURNER APPLICATION

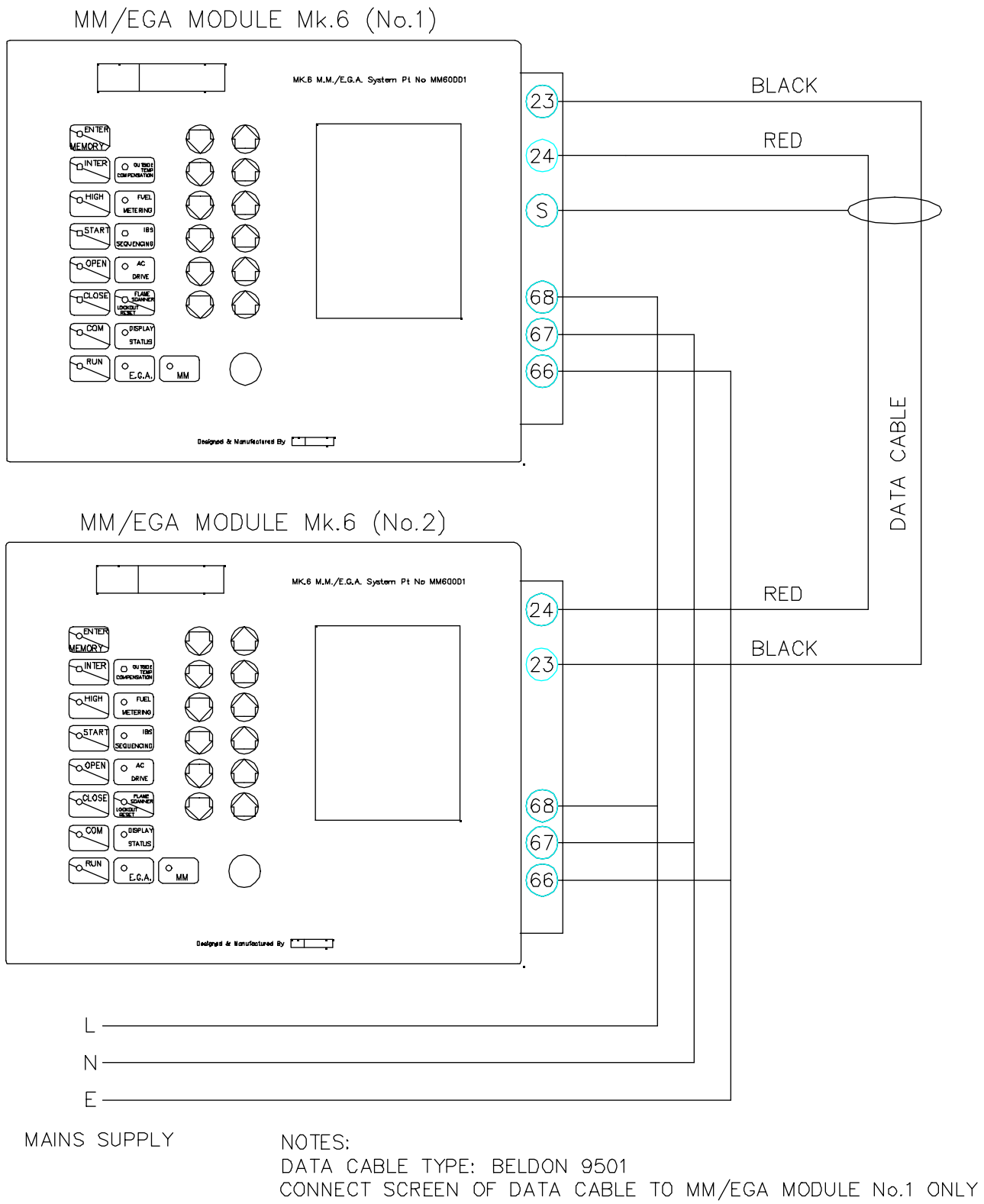

NOTES:
DATA CABLE TYPE: BELDON 9501
CONNECT SCREEN OF DATA CABLE TO MM/EGA MODULE No.1 ONLY

The same arrangement applies to the Mini Mk6.

06/10/97/3393/NPG

2.14.8 HAND/AUTO AND LOW FLAME HOLD FACILITIES

Low Flame Hold and Hand Operation

'Low Flame Hold' and 'Hand' operation are only effective when the burner is firing. They have no effect when the burner is off or during the burner start up cycle. They are effected by applying a mains voltage signal to terminal 95 for Low Flame Hold, or terminal 94 for Hand Operation. When these inputs have no mains signals applied, the system modulates according to the PID control.

LFH is brought into operation if terminal 94 has a signal applied when the ignition part of the burner start up cycle takes place. The minimum flame position will be maintained from now on, until the signal from 94 is removed. LFH will be established again by applying an input to 94 again. During LFH the PID control is obviously ignored.

'Hand' operation enables the fuel valve position to be set to a specific position, in the range of minimum to maximum flame. Once a position has been set it is recorded in the MM units memory. Each time the burner starts the fuel valve will be positioned to the 'hand' position set previously, even if the MM unit has been powered down. The MM system sets the fuel valve to the hand position whenever there is a mains signal on terminal 95. Once the burner is firing the 'hand' position can be adjusted by switching to the 'MM' screen and using the bottom row of  buttons on the Mk6 facia.

See Option 60 for details on Bumpless Transfer.

If hand and low flame hold operations are selected at the same time, via inputs both on terminals 94 and on 95, then low flame hold takes priority.

2 .14.9 FAULT FINDING

WARNING ! ! ! !
MAINS AND HIGHER VOLTAGES EXIST ON THE MM AND POSITIONING MOTORS.
THE SYSTEM CONTROLS A COMBUSTION PROCESS.

Only competent personnel aware of the implications of the above warning should attempt fault finding. Personnel must be responsible for the conditions under which fault finding takes place. (e.g. isolation of fuel supply)

Please Note: Personnel not familiar with the system should carry out tests in the order written.

The method of fault finding described is for a system that has been working correctly and has gone wrong. It is not for trouble shooting new systems which may for example have incorrect wiring. It also will not turn up faults which are a result of tampering.

Before commencing any fault finding:-

Set option 12 to 0
Set option 9 to value 0 (NOTE - only limit stat effective) or ensure actual value is less that required value sufficiently to energise CR relay.

The CR relay must be energised for the stat circuit to be made.

PRELIMINARY CHECK

If display is blank check for RUN led, if RUN led is also blank check mains supply to unit. Remove back cover of MM and check mains supply on 4 way terminal block. If supply to unit is good, remove supply to unit and check fuse.

If unit is still blank it is likely there is a fault on the M.M.

Ensure there is no lockout condition.

Deselect fuel
Select fuel

Press 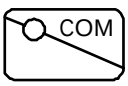

before COM l.e.d. stops flashing (5 seconds).

Check stat circuit is made.

Refer to Section 2.14.3.1 for the burner start up sequence and timings. Follow these through to find a possible fault.

If using an external control box refer to the MiniMk5 section 2.3.

2.14.10 OTHER INFORMATION AND ILLUSTRATIONS

2.14.10.1 Mk6 MM Front Facia Details

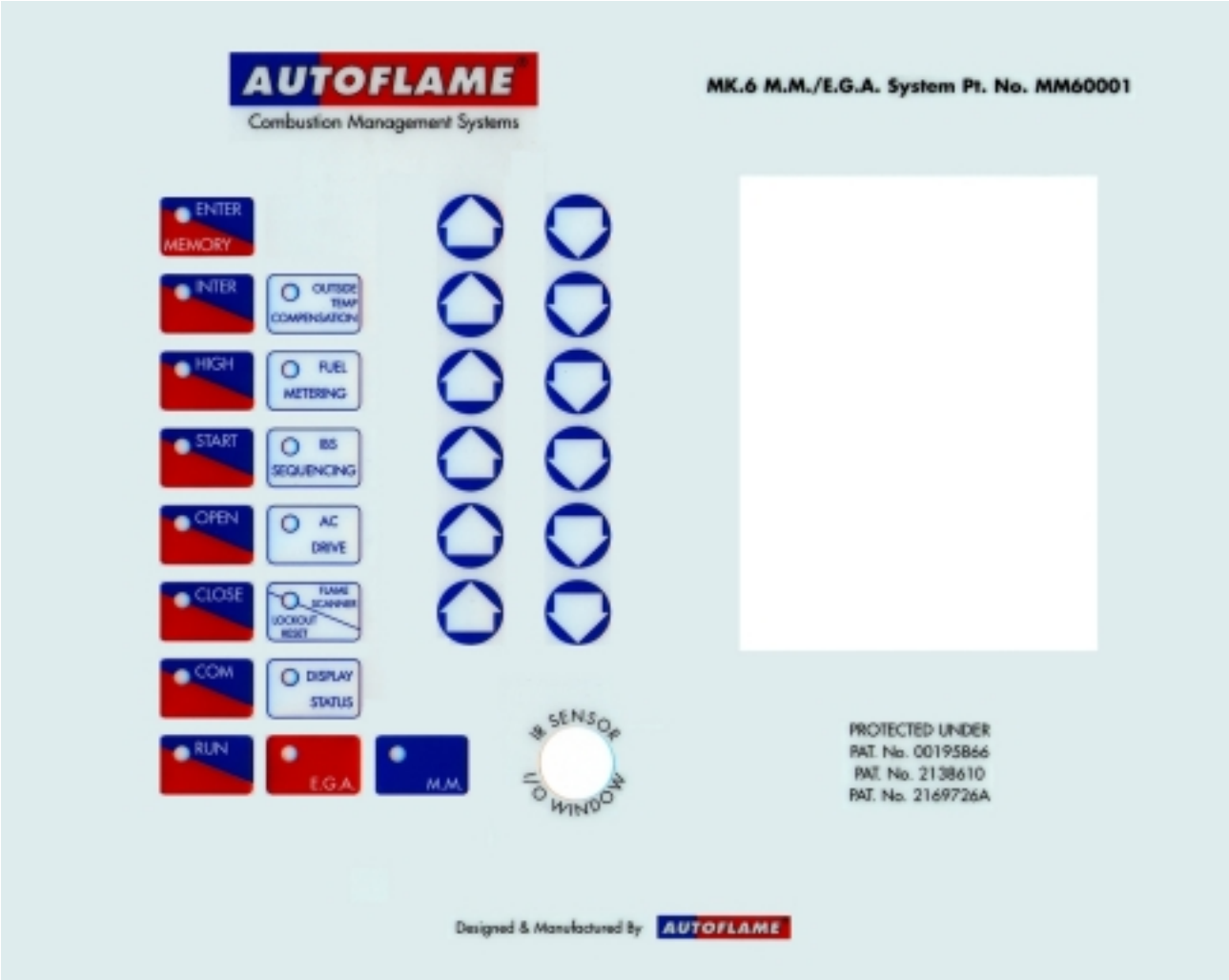

EXAMPLE TO CHANGE DIRECTION
OF POSITIONING MOTORS.

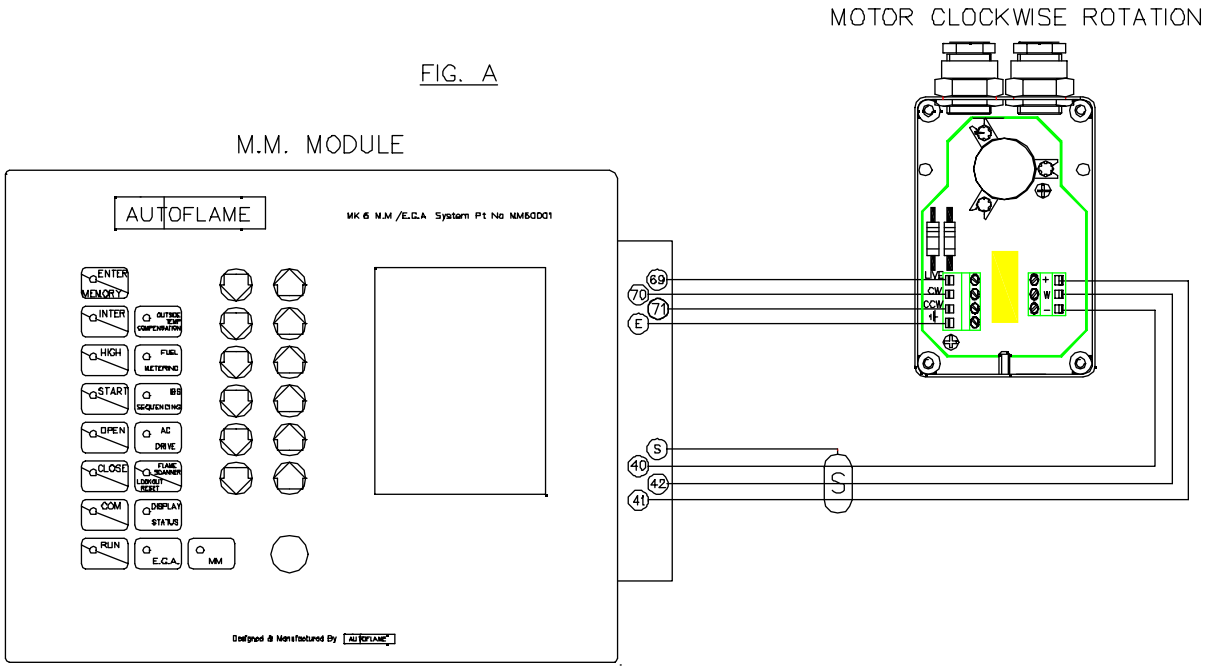

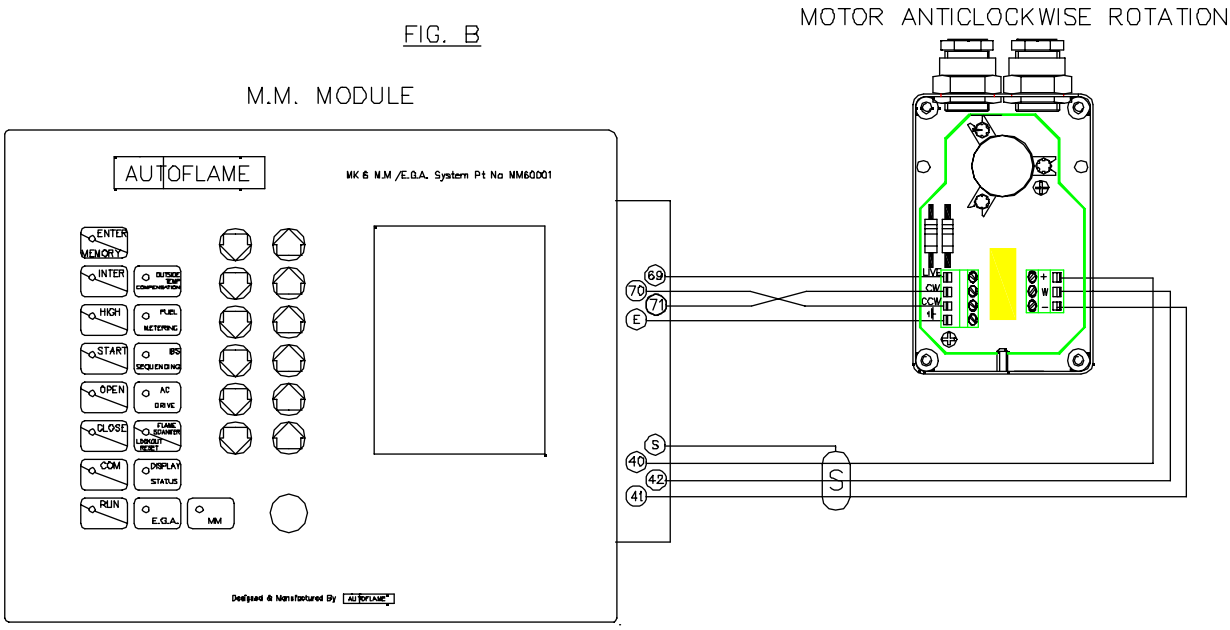

FOR ILLUSTRATION PURPOSES FUEL MOTOR CONNECTIONS ARE SHOWN.

The same arrangement applies to the Mini Mk6.

3394/16:10:00/T.F.

TIMING DIAGRAM FOR Mk 6 M.M. UNIT
TO EXTERNAL BURNER CONTROL BOX.

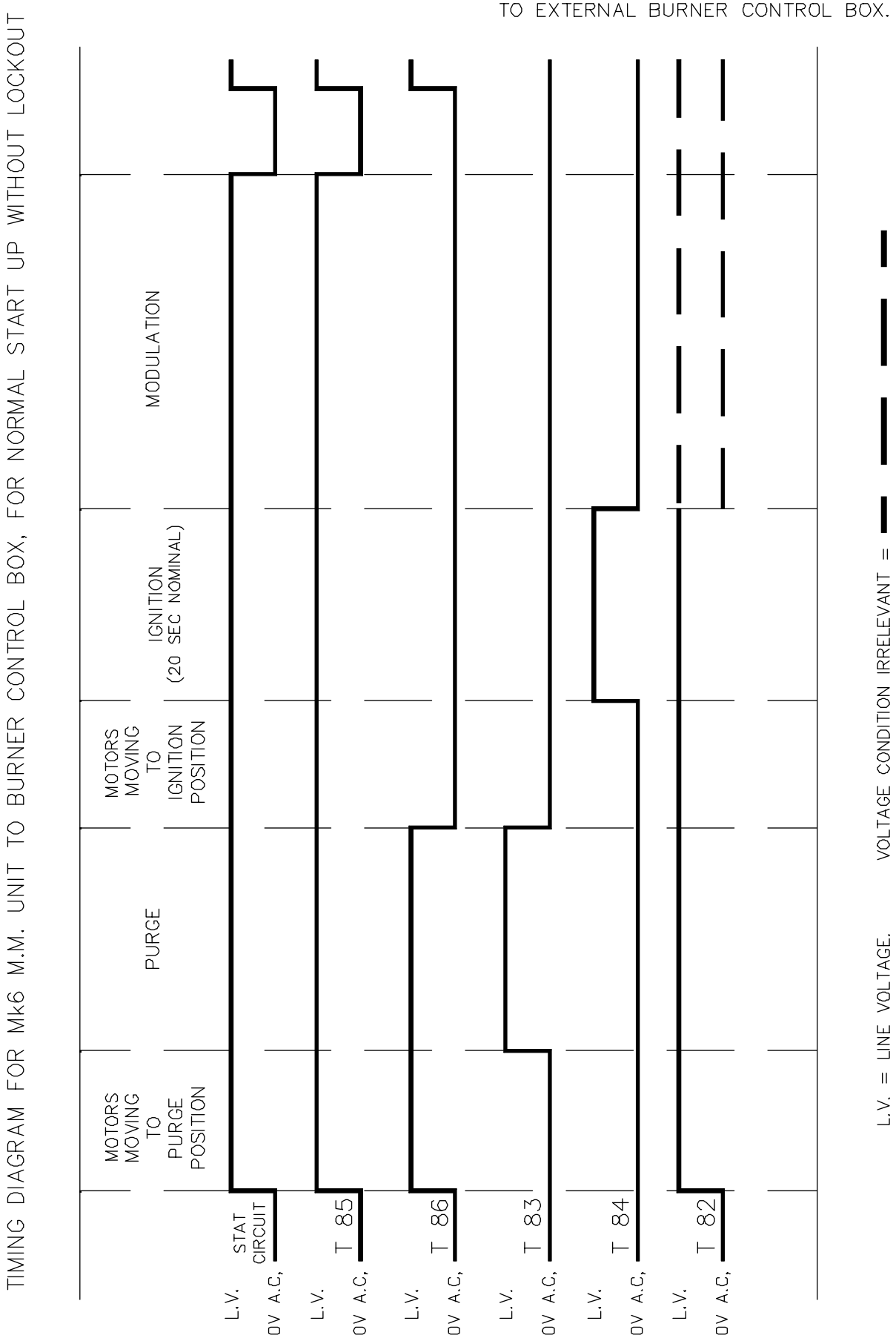

12:11:97/3459/NAL

Mk.6 M.M. Fixing Holes & Dimensional Details

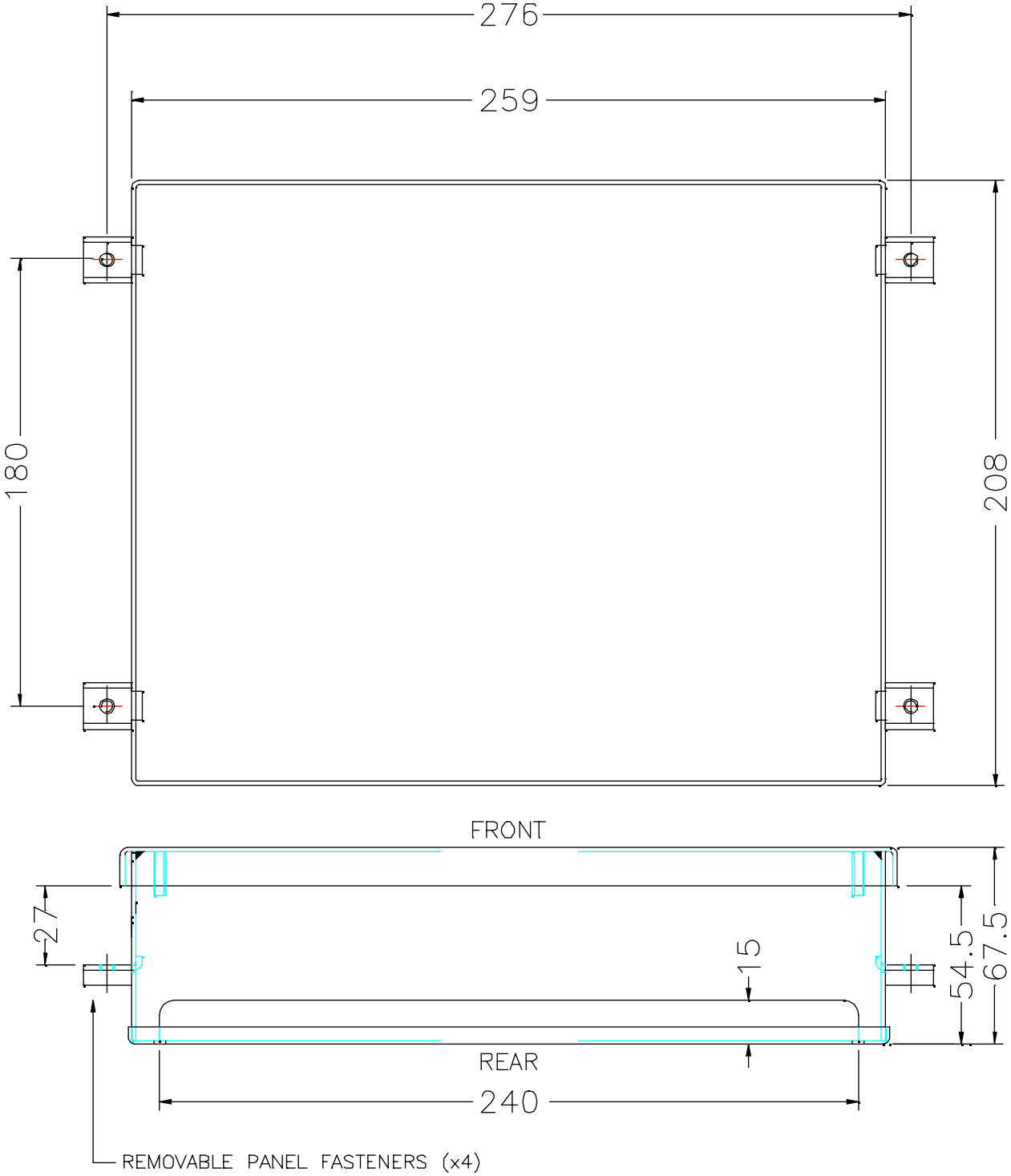

Bottom View shown with lid in position.

28:10:99/3426/J.C.F.

Schematic View Of IR Upload Download

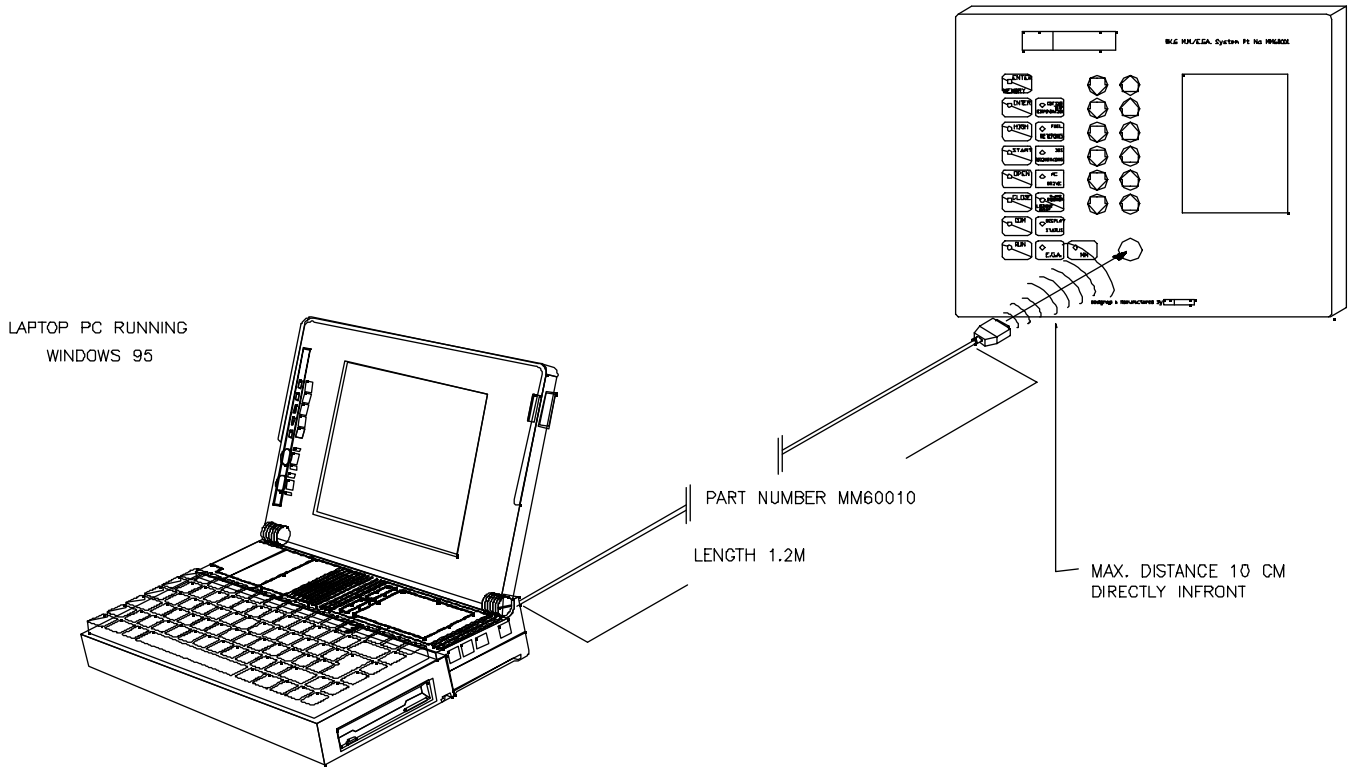

Software Installation

Insert diskette 1 into drive A: (your first floppy drive) and from Windows click on the Start button and choose Run. Type A:\SETUP and press the enter key, then follow the instructions on the screen.

When SETUP has completed, insert the key diskette into drive A:, click on Start and choose Run. Type A:\INSTALL and press enter.

The software need to be configured to the serial (COM) port that the IR lead is connected to. This happens the first time the Mk6 Upload/Download software is run.

WARNING

IT IS THE RESPONSIBILITY OF THE OPERATOR TO ENSURE THAT AFTER AN UPLOAD ALL THE OPTIONS, PARAMETERS AND FUEL/AIR RATIO COMMISSION DATA ARE CHECKED FOR CORRECTNESS.

2.14.10.6 Maintenance and Servicing

The Micro Modulation Unit uses solid state technology. It requires no routine maintenance. If it develops a fault that it can diagnose and display it will do so.

The positioning motors/gas/oil valves also do not require routine maintenance. Any fault associated with these parts is usually diagnosed by the MM.

2.14.10.7 Installation Precautions

The reliability of the equipment may be impaired if used in environments where strong electro magnetic fields exist. If for example the equipment is installed in a boiler house at the top of a high rise building where radio systems exist then additional EMC (Electro Magnetic Compatability) measures may have to be considered

2.14.11 FUEL FLOW MEASUREMENT AND METERING OPERATION

1. Go to Options, set Option 57 to 1 (default 0).

2. When the above is displayed press ENTER/MEMORY, this will initiate the Flow Metering setup mode.

3. Next time the burner starts the M.M. will go into the ten point setup mode for Flow Metering automatically.

4. In this mode the display will show fuel valve position in degrees angular and the flow units which can be adjusted by using the third row of buttons.

   Note:

   a) The CH4 window confirms to the commissioning engineer which of the 10 points are currently being measured.

   b) The minimum numerical value for fuel flow that can be entered into memory is 0.01.
   The maximum numerical value for fuel flow that can be entered into memory is 999.0

   c) The values are entered in descending order, i.e. Point No.1 is maximum flame and Point No.10 is at minimum flame. The 10 sequential point on the load index are allocated automatically by the M.M. All values are in units/minute.

5. When fuel flow has been calculated or read off of a commissioning fuel flow meter the value is entered as detailed in Point No.4.

   The ENTER/MEMORY button is then pressed and the value is logged in the M.M. memory.

6. The above detailed data entry routine is repeated until all 10 points have flow values allocated to them.

7. When the last (10th) point has been entered the burner continues to fire.

8. To display Fuel Flow Metering press FUEL METERING button.

9. To reset Totalising value to 0 (zero) set Option 57 to 2, press at ENTER/MEMORY that time.

Note: Fuel flow metering measurement now automatically starts totalling the amount of fuel used from the moment the main gas valves are energised. Previously this was counted from the ignition output and a delay time then had to be set via option 58. This option no longer applies with the Mk6 Evolution unless an external flame safeguard is being used.

2.14.12 GOLDEN START

This facility enables an ideal ignition/start position to be set into memory that is not necessarily low flame or indeed part of the standard modulating load index.

To enable this facility to go to Option 29, set to 0 (zero), (Default value 1) and press ENTER MEMORY .

To disable this facility go to Option 29, set to 1 and press ENTER MEMORY

To implement the above, the system/burner is commissioned in the normal way, i.e. Press COM

enter Password, enter Close position, enter Open position, enter Start position and adjust Fuel/Air positioning motors to give initial arbitrary ignition position. This position is not memorised. The burner will fire and the start position LED will flash again.

Press START , LED will remain stable, adjust Fuel/Air positioning motors to give the ideal

ignition/start up position.

Press ENTER MEMORY and proceed with the commissioning routine in the normal way.

Notes:

1. The Golden Start/ignition position of the fuel and air positioning motors is completely independent from the modulating load index commissioned value data.

2. The facility is particularly useful on combustion systems with large turndowns and when firing heavy fuel oil, as it enables the burners to start/ignite at a fuel rich position and then, after a stable flame is established, to revert to the commissioned values for Fuel/Air ratio.

3. **WARNING** this facility is common to all fuels (F1, F2, F3 & F4). A value must be entered on each programmed fuel.

4. The time that the M.M. holds the Golden Start position for is adjustable, see parameter 15. (default value is 5 seconds, range 0-255 seconds).

5. If the commissioning engineer wishes to change the Golden Start position retrospectively this can be re-entered, without fully recommissioning the burner, in the following manner:

   Go into Commission mode, enter Password, enter Closed and Open positions and enter, as previously described, to the point where High flashes then deselect fuel or power down. In this way the new Golden Start position is entered.

6. It is important to appreciate that the Golden Start position is completely independent of the Fuel/Air paired values that are entered for the normal modulating load index/range.

2.14.13 ONE POINT CHANGE

To change a point:-

Start up the burner in the normal way.

Once modulating press START and COM simultaneously. 'ENTER PASSWORD' should be displayed. Set the password and press CLOSE in the same way as if going into normal commissioning, the channel position values should be displayed. The valves track to the nearest commission point (e.g. HIGH/INTER/START).

When all the values have settled at their appropriate positions ENTER flashes. If this point is to be changed press ENTER MEMORY. If not press the CH1 button to move to the next point up or the CH1 button to go to the next point down. The M.M. detects which point has been selected and will steady the appropriate LED on either HIGH, INTER or START as during normal commissioning. If EGA is optioned EGA will flash, press to E.G.A view. It should now be possible to adjust each value individually.

Adjust the values as desired and proceed to press. ENTER MEMORY If EGA is optioned AUTOTRIM will be carried out and EGA values stored. The M.M. will revert to just ENTER and RUN flashing. If desired another point can be selected and changed otherwise press RUN and the M.M. reverts to normal modulation. If the CH1 (fuel) HIGH or START position has been adjusted check the flow metering. It is likely that the 10 point flow calibration must be carried out again.

2.14.14 FLUE GAS RECIRCULATION

Flue Gas Recirculation (FGR) is a method whereby a quantity (approximately 15%) of the boiler flue gases are fed back to the burner and mixed with the combustion air. The virtue of FGR is the reduction of NOx gases. With the FGR facility, positioning motor channels 3 or 4 can be used to control the amount of flue gas fed back. It is not good practice to feed back the gases when the flue gas is cold, so all the elements (ie positioning motors and AC drives) can be set at 'FGR' positions until the gases are hot. During this time the element (CH3 or CH4) controlling the FGR would normally be set closed. Once the gases are hot, modulation takes place in the normal way using the curve entered during commissioning.

To ascertain if the gases are hot a number of options have been added:

Option 48

A Time in seconds that the FGR positions are held for (once ignition has taken place) after which modulation can take place.

Option 49

An offset amount (eg 20) below the Required value (eg 100). This gives a threshold value of 80 (100 – 20). The FGR positions are held until the Actual value has attained the threshold value (80). Thereafter normal modulation can take place.

Option 50

This is an enable/disable type option. If enabled an Exhaust Gas Analyser must be present on the system. The FGR positions are held until the Exhaust Temperature value from the EGA reaches 120C. Thereafter normal modulation takes place.

2.14.15 PAUSE FACILITY

When the system is in commissioning mode only, a facility has been provided that enables a commissioning engineer to pause the ignition sequence of the burner. If the lockout button is pressed during the first safety time the burner control will 'pause' at this position. This enables the commissioning engineer to make adjustments to the start gas flame. If the flame goes out during this time a lockout is set after 15 seconds. If the flame is present and the 'pause' condition is left indefinitely a lockout will be set after 10 minutes. If the lockout button is pressed again the ignition sequence continues. While paused the lockout LED on the front fascia flashes. The 'pause' facility can also be activated during the pilot prove and main flame prove phases. When the system is in a run mode the facility is disabled.

WARNING

IT IS THE RESPONSIBILITY OF THE OPERATOR TO ENSURE THAT USE OF THE PAUSE FACILITY DOES NOT LEAD TO A HAZADOUS SITUATION.

2.14.16 TIME CLOCK FACILITY

Time Clock Set Up

To adjust the time clock settings go into commissionning mode. (Power down/reselect fuel, press COM within 5 seconds). The 'ENTER PASSWORD' screen should now be displayed. Set the password to **11** and press CLOSE. **11**

The 'Time Clock' screen will be displayed:

TIME CLOCK

	START	STOP	MODE
MONDAY	07:45	16:15	ON off
TUESDAY	07:45	16:15	ON off
WEDNESDAY	07:45	16:15	ON off
THURSDAY	07:45	16:15	ON off
FRIDAY	07:45	16:15	ON rsp
SATURDAY	07:45	16:15	ON rsp
SUNDAY	07:45	16:15	ON off

TIME CLOCK ENABLED

BURNER ON - NORMAL SETPOINT*

Monday 12 October 2000 09:50:23*

Note: items marked * not displayed during setup

Use the channel 6 up/down buttons to select the day and item to be adjusted. The selected item will flash.

For Start/Stop times:
Set the hour by means of the channel 1 up/down buttons.
Set the minute by means of the channel 2 up/down buttons.

For Mode:
Select the desired operation by means of the channel 1 up/down button.

To enable/disabled the time clock operation use the channel 5 up/down buttons.

Press ENTER to memorise the time clock configuration. If enabled, the time clock operates from now on when in run mode. To disable time clock operation, enter the password as described above and set the time clock to disabled using the channel 5 up/down buttons and press ENTER.

Time Clock Operation

Operation during and outside the start/stop times is according to the mode selected:
ON off The burner runs and modulates according to the normal Required value during the start/stop times. Outside of the start/stop times the burner is held off.
ON rsp The burner runs and modulates according to the Normal Required value during the start/stop times. Outside of the start/stop times the burner runs and modulates according to the Reduced Required value.

The normal setpoint and reduced setpoint are adjustable by means of the channel 3 and channel 4 up/down buttons respectively when the status screen is selected.

In normal run operation the Time Clock screen is selected on the third press of the status button.

2.14.18 AUTOMATIC COMMISSION OF GAS PRESSURE VALUES

A facility has been added to the Mk6 Evolution so that the gas pressure values (during VPS and for each fuel/air ratio point entered) can be commissioned without having to carry out a full fuel air ratio commission.

To invoke this facility the system must already be commissioned on fuel /air ratio. Option/parameter 150 must be set to value 8 then the enter button pressed. Options/parameters 136/137 must be noted and set to 0-off so that gas pressure limit errors do not occur while the system is running.

Start up the system as normal. Once the burner is firing the system attains the high fire positions and samples and stores the gas pressure at that point. The first fuel/air ratio inter positions are then attained and the gas pressure again sampled and stored. This process is repeated until all fuel/air ratio inter and start positions are complete. The new gas pressure values are then permanently stored and thereafter an MM ERROR is set - GAS RECOMMSSION. (This is to bring to the attention of the operator that Options/ Parameters must be adjusted back to operational settings). The error must be cleared and option/ parameter 150 set back to 0. If not set back to 0 the gas values will be commissioned again and the MM ERROR will ensue. Options/parameters 136/137 must also be adjusted to their appropriate values.

THE OPERATOR MUST NOW CHECK THE SYSTEM FOR CORRECT OPERATION.

Check the gas pressure commission value displayed during VPS operation. Once the burner is firing, check the gas pressure commission values for each fuel/air ratio point entered - this can be achieved by means of the hand operation facility.

2.14.19 FLAME DETECTION USING EXTERNAL FLAME SWITCH

To configure operation with a flame switch Option/Parameter 122 must be set to 1.

The operation of terminals 85 and 86 must be as follows:

When the flame switch is indicating no flame, the voltage on Terminal 85 must be 0Vac.

When the flame switch is indicating the presence of a flame, the voltage on Terminal 85 must be mains voltage (110/230Vac).

Terminal 85 is the functional input for detecting the flame.

Terminal 86 is solely for the purpose of checking that terminal 85 is operating correctly. Terminal 86 must seen to be the inverse of terminal 85.

If terminal 85 is at 0Vac, terminal 86 must be at mains voltage.

If terminal 85 is at mains voltage, terminal 86 must be at 0Vac.

If terminal 86 does not follow the inverse of terminal 85 the following lockout will occur - Terminal 86 Inverse.

Flame Switch Configuration

Within the MM there is a latency of 250 milliseconds on the monitoring of terminal 85. To ensure a 1 second overall flame failure response time, it is essential that the response time of the flame switch is set to no more than 750 milliseconds.

Flame switches often provide a volt free change over contact to indicate the flame status. Alternatively, they may provide a pair of `inverse' outputs. If the flame switch only provides a single output terminal, a relay will have to be installed between the flame switch and the MM to provide a set of volt free changeover contacts.

Section 2.15: Mini Mk6 M.M. Micro Modulation

2.15.1 MINI MK.6 M.M. CONTROL UNIT

The operation of the Mini MK6 is similar to the MK6 with fewer options available.

Refer to the appropriate details in Section 2.14.

2.15.2 MINI MK.6 COMMISSIONING

2.15.2.1 Options

To Select Options Mode.
Ch1, Ch2, & Ch3 etc. refer to the rows of buttons respectively starting with CH1 at the top.

Option values can be changed by entering the Option mode. The password must first be entered. To enter the password follow the steps listed:

Either deselect and then select fuel or power down and then up

If system is already commissioned, press COM before the COM l.e.d. stops flashing

If system is not already commissioned, commissioning mode will be set automatically

The password screen is displayed:

```
PASSWORD                0
PASSWORD                0
F1  COMMISSIONED       23
```

Use the CH1 and CH2 buttons to set the Password codes. Then press CLOSE

To select the Options screen, Press the Ch1 buttons simultaneously. The following screen should be displayed:

```
OPTION No     1-   3
BOILER SENSOR TYPE
TEMPERATURE SENSOR
0-400 C,    3-730 F
```

Rows 2, 3 & 4 display textual descriptions of the option number and value

To change the Option number use the CH2 buttons

To change the value use CH3 buttons

Any number of Option values can be changed when in Option mode

When changes have been made press ENTER MEMORY

All new Option values are then permanently stored

Option No.	Factory Setting	Option Value	Description
1.	**3**		**Boiler Temperature/Pressure Sensor Type:**
		3	0-400C Temperature Sensor (MM10006 & 7).20-390 C. (50 - 730 F.)
		4	Unused
		5	Unused
		6	0-18 Bar Pressure Sensor (MM10008) 2.0 - 23.0 bar (30 - 330 P.S.I.)
		7	0-30 Bar Pressure Sensor (MM10009) 2.0 - 38.0 bar (30 - 550 P.S.I.)
		8	0-3.0 Bar Pressure Sensor (MM10010) 0.2 - 3.80 bar (3.0 - 55.0 P.S.I.)
2.	**60**		**Motor Travel Speed:** The value is not specific to a time/distance ratio. If the speed of the motor is too fast then increase this option value. If too slow, decrease the value. This speed adjustment is only relevant during modulation. At other times the motors move at full speed or as set for Purge in Option 75.
		5-240	Adjustment Range
3.	**0**		**Unused.**
4.	**40**		**Unused.**
5.	**0**		**Purge position**: This selects the purge position. (Applicable to Channel 1-4 when selected, See Options 67 - 70).
		0	Selected Channel purges at HIGH position.(High Fire Position)
		1	Selected Channel purges at OPEN position.(Full span of servomotor as entered during commissioning)

Option No.	Factory Setting	Option Value	Description
6.	**10**		**P & I control**: Options 6 and 7 are used for adjusting the proportional and integral settings of the M.M.'s built in P + I + D controller. See Option 37 for the derivative adjustments. *Example of proportional band offset: Required value = 100 C, Proportional offset = 10 (i.e. Option 6 set to value 10).* 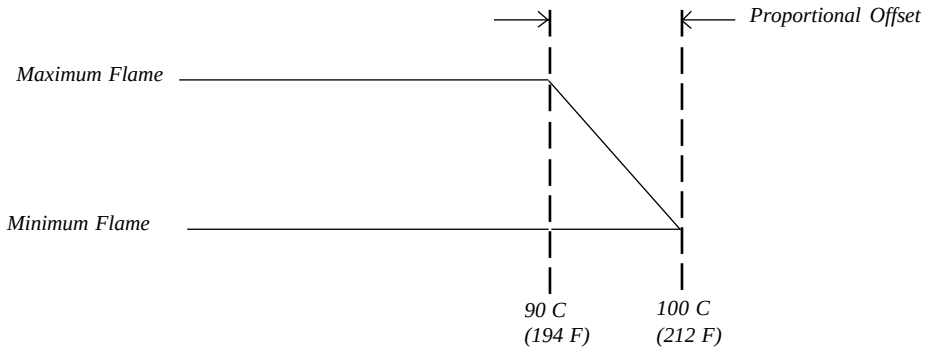 **Proportional band**: Value entered - Centigrade, Fahrenheit, Bar or p.s.i. depending on type of control sensor and display units selected (refer Options 1, 51 and 52).
		5-50 0.5-5.0	For Centigrade, Fahrenheit and p.s.i. selections, If Bar is selected.
7.	**60**		**Integral time**: Every n seconds 10% of the present offset from setpoint value is added or subtracted to the present proportional value. The value of n is set in this option. It is possible to set this Option to 'off'. If 'off' is selected there will be no integral action control. (Integral is equivalent to 'Reset')
		OFF-250	Seconds.
8.	**1**		**Number of Servo Motor Channels to be enabled**: Channel "1" is always enabled (Fuel Position Motor). Set Option 8 to the number of additional channels required (Minimum of 1) .
		1	Channels 1-2 In use.
		2	Channels 1-3 In use.
		3	Channels 1-4 In use

Option No.	Factory Setting	Option Value	Description
9	**1**		**CR1 Relay Operation**: The 'CR1' relay serves two purposes. To turn the burner off in the event of an M.M. system error and to effect a 'working' stat. There are three settings for this Option. The first keeps the 'CR1' relay closed all the time. In this instance, a 'working' stat must be fitted to the boiler. The second setting opens the 'CR1' relay at an offset above the Required value and closes it at an offset below the Required value. The third setting opens the 'CR1' relay at an offset above the Required value and closes it at an offset also above the Required value. The 'CR1' relay must always be fitted even if it is not used as a stat so that the burner will shut down in the event of an M.M. error. The following diagrams illustrate the 'CR1' relay operation. The offset values are set in Options 10 and 11.
		0	CR1 always closed.(must be set for external modulation, see Option 45)
		1	CR1 closes below Required value.
		2	CR1 closes above Required value.
			Option 9 = 1, example using 100 C (212 F). Required Value.
			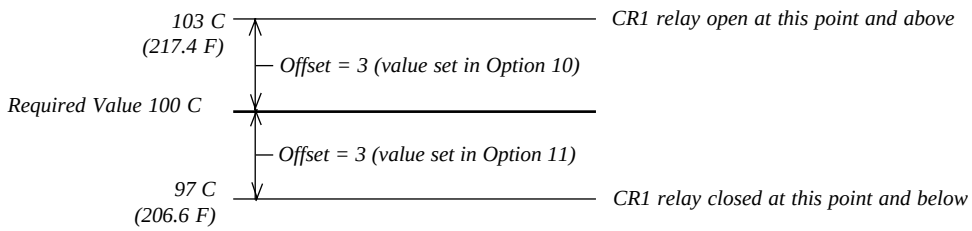
			Option 9 = 2, example using 100 C (212 F). Required Value.
			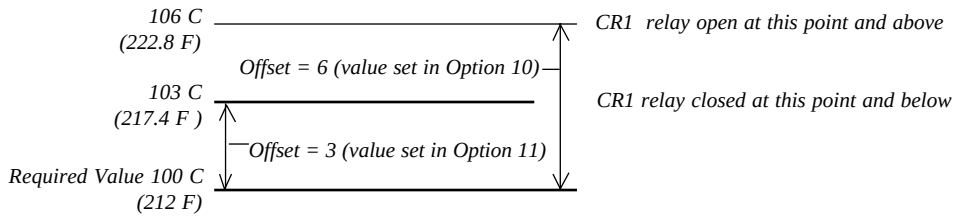
10.	**3**		**Offset above desired value at which CR1 relay opens:** (Only relevant if option 9.1 or 9.2 selected).
		2-50 0.2-5.0	If Centigrade, Fahrenheit or p.s.i. units effective. If Bar units effective.
11.	**3**		**Offset below/above desired value at which CR1 relay closes:** (Only relevant if option 9.1 or 9.2 selected).
		2-50 0.2-5.0	If Centigrade, Fahrenheit or p.s.i. units effective, If Bar units effective.

Option No.	Factory Setting	Option Value	Description
12.	**0**		**E.G.A. Options**: There are numerous E.G.A. Options, briefly they are as follows:- The E.G.A. is operational and the system trims. If the E.G.A. develops a fault, the system reverts to M.M. only operation. The system can be further optioned so that in the event of an E.G.A. error the 'CR' relay will open and stop the burner. If this type of option is set, the 'CR' relay will not close until the E.G.A. has cooled down to it's operating temperature. Further Options can be set which perform limit checks on the values that the E.G.A. measures. In the event of a limit being exceeded the system can revert to M.M. only operation, alternatively the 'CR' relay can be optioned to open. A last Option exists to enable an E.G.A. to give readings on the M.M. for just monitor purposes. i.e. the system is commissioned on M.M. only but E.G.A. values are displayed just for information. All Option values except 0 make the E.G.A. operational. If Options 5 or 6 are selected , refer to Options 19-27 to set limits to be tested for.
		0	E.G.A. not optioned.
		1	System reverts to M.M. only operation if E.G.A. error.
		2	'CR1' relay opens if E.G.A. error.
		3	Unused.
		4	Unused.
		5	Limits tested, system reverts to M.M. only operation if E.G.A. error or limit e x - ceeded.
		6	Limits tested, 'CR' relay opens if E.G.A. error or limit exceeded.
		7	System commissioned on M.M. only, E.G.A. used as monitor.
13.	**0**		**Restore Factory Settings:** To set all Options back to their original factory set values, set Option 13 value to 26 and press enter.
		0-30	
14.	**0**		**Twin Burner Systems :** Twin Burner Operation enables two burners to run at the same time and with equal input. 14=1 The burners are identified with identification numbers e.g. 1 and 2 (See Option 33). If one of the burners develops a fault, then both burners are shut down. Only one load detector is required, this is connected to the odd numbered burner. 14=2. One or the other burner can be fired independently. If they are fired at the same time they synchronise together. Load detectors are required on both units. **N.B.** The Burner Control Circuit inputs and low position proving signals (T84 outputs) may have to be cross coupled depending on the application.
		0	Normal single burner operation.
		1	Twin Burner Operation - Both burners always fire together.
		2	Twin Burner Operation - Burners can run individually or together.
15.			**Unused.**

Option No.	Factory Setting	Option Value	Description
16.	**0**		**Sequencing/DTI:** If Option 16 is set to values 1 or 3, then this M.M. will respond to sequencing commands (See section on Sequencing). A lead boiler can be selected by connecting line voltage to terminal 88 of the appropriate M.M.. Only 1 M.M. may be selected at a time or the sequencing will not operate. Alternatively the lead boiler can be selected via the D.T.I. For this to be effective all the M.M.s on the system must have terminal 88 volt free.
		0	No sequencing.
		1	Sequencing enabled.
		2	Setpoint & enable/disable commands accepted from D.T.I.
		3	Both of 1 & 2.
17.	**0**		**NO & CO displayed when running on oil:** If fuel 2,3 or 4 are selected, then the displaying of CO & NO can be on or off. This Option is only relevant if an E.G.A. is operational on the system.
		0	NO & CO display always zero.
		1	NO & CO is displayed normally.
18.	**1**		**Carry forward of Trim:** When the system modulates, the correction that may be existing on the air damper position can be carried forward. Only air plus correction is carried forward. This Option is only relevant if an E.G.A. is operational on the system.
		0	No carry forward of trim.
		1	Trim carried forward.
19.	**0**		**Upper offset limit % O_2.** **E.G.A. Limits:** Options 19-27 are only relevant if an E.G.A. is operational on the system. Option 12 value 5 or 6 must be selected if any of the following limit checks are to be invoked. To enable the checking of a particular limit, make the value of the appropriate Option a non-zero value. The amount of 'limit offset' is specified by the value entered. e.g. If the 'upper limit offset O_2' is to be enabled and the value of the offset is 2.0%, then enter the value of 2.0 for Option No. 19.
		0-10.0	% O_2.
20.	**0**		**Upper offset limit % CO_2.**
		0-10.0	% CO_2
21.	**0**		**Upper offset limit CO** (Multiply entered value by 10 to get offset value in ppm).
		0-200	CO
22.	**0**		**Lower offset limit % O_2**
		0-10.0	% O_2

Option No.	Factory Setting	Option Value	Description
23.	**0**		**Lower offset limit % CO_2**
		0-10.0	% CO_2
24.			**Unused.**
25.	**0**		**Absolute value % O_2** .(System checks for O_2 values lower than value specified in this Option).
		0-20.0	% O_2
26.	**0**		**Absolute value % CO2. (System** checks for CO_2 values higher than value specified in this Option).
		0-20.0	% CO_2
27.	**0**		**Absolute value ppm CO.** (Multiply value entered by 10 to get actual ppm value). System checks for CO readings higher than values specified in this Option.
		0-200	CO ppm
28.	**20**		**Trim threshold:** This option is only relevant if an E.G.A. is operational on the system. The value set in this Option is subtracted from the operator set "Required" value. If the Actual value is less than the result then no Trim action will be effected. If the trim is to be effective all the time then set the value to zero. Must also be set to O for the EGA to operate when external modulation is optioned.
		0-50	If Centigrade, Fahrenheit or p.s.i. units effective.
		0-5.0	If Bar units effective.
29.	**1**		**Golden Start:** NB. Must be entered on each fuel individually if more than one fuel is commissioned. Refer to section 2.14.12 for further details.
		0	Golden Start operates.
		1	Golden Start does not operate.
30.	**50**		**D.T.I. - Required Value Minimum Limit:** If the system is being used with a D.T.I. a maximum and minimum limit for the Required value must be set. The M.M. will only act on values within the limits set. If a value is received from the D.T.I., that is outside these limits, it will be ignored and the system uses its previous Required value. Practical range is limited to range of sensor selected.
		5-995	If Centigrade, Fahrenheit or p.s.i. units effective.
		0.5-99.5	If Bar units effective.
31.	**100**		**Maximum Limit.**
		5-995	If Centigrade, Fahrenheit or p.s.i. units effective.
		0.5-99.5	If Bar units effective.

Option No.	Factory Setting	Option Value	Description
32.	**20**		**Trim Delay:** After ignition the sampling system does not sample for the period of time set in this option. (Only relevant if E.G.A. is operational on system). This allows for the boiler to warm up and combustion to stabilise before sampling commences.
		0-250	Period (seconds) after ignition no sampling takes place.
33.	**1**		**MM Identification No. -** Sequencing Options: If this M.M. is configured as part of a sequencing system and/or required to communicate with a D.T.I. then the following three options must be set: The first is an identification number for this M.M.. The second is the rating of the burner, and the third is the "sequencing scan time". Refer to Sequencing Section for further explanation.
		1-10	Identification Number.
34.		**5**	**Rating of burner**
		1-999	See option 77 for units.
35.	**10**		**Sequence Scan Time. (minutes)**
		1-100	Sequence Scan time (Minutes).
36.	**0**		**E.G.A. Sensor Selection:** Available when using an E.G.A. System fitted with NO/SO_2 sensors. The following option is for selecting the type of Sensor required: Part No. EGA20005 for NO; EGA20006 for SO_2.
			SO_2 NO
		0	Off Off
		1	Off On
		2	On Off
		3	On On
37.	**0**		**Time Between Readings**
			Explanation of D. (Derivative Action): The user adjustable control variables to set up the D action are as detailed below. (Derivative is equivalent to 'Rate')
		0	(0=off)
		1-200	Seconds. The time interval between the controller comparing Actual and Required Setpoint values.
38.	**2**		**Deadband.** The Deadband is the margin above and below the Setpoint within which no derivative control action occurs.
		0-15	If Centigrade, Fahrenheit or PSI units optioned.
		0-1.5	If Bar units optioned.

Option No.	Factory Setting	Option Value	Description
39.	**10**		**Response Sensitivity.**
		1-100	%
			The Sensitivity Number indicates the amount of percentage firing rate increase or decrease that is inflicted by the Derivative action; e.g. If the chosen value was 10% then 10% of the maximum firing rate would be added to the existing rate of fire; i.e.: If the burner were firing at 50% load and the derivative action was triggered the firing rate would increase by 10+50 to 60%. The following is an example of the above control philosophy in action: Note: "Time Between Readings" set to 20 seconds. "Deadband" set to 2°C (2°F.) "Response Sensitivity" set to 10%. Setpoint Information: "Required" set to 90°C (190°F.) "Actual" reads 86°C (186°F.) Firing Rate Information: Burner firing at 50% of capacity. In the example situation there has been 4°C (4°F) drop in temperature below the "Required" value. The Deadband is set at 2°C (2°F.), therefore the Derivative action will be triggered as the deviation from Setpoint is in excess of 2°C (2°F.). In this example 10% will be added to the 50% firing rate resulting in an increase in firing rate to 60% of capacity. The "Time Between Readings" is set for 20 seconds and if after this time interval the "Actual" reading is not within the 2°C (2°F) deviation from "Required" Deadband another 10% would be added to the 60% firing rate which would result in a 70% firing rate. By careful selection of "Time Between Readings" "Deadband" and "Response Sensitivity" an ideal response to rate of change over time can be configured. The control philosophy detailed operates inversely if the "Actual" temperature exceeds the Setpoint and is outside the "Deadband". To enable or switch on the Derivative action the "Time Between Readings" must be set in excess of 10 seconds.
40.	**0**		**Warming Facility for Low Pressure Steam IBS.** For applications without a non return valve, IBS Warming will not operate on reduced setpoint. The facility exists to install a thermostat in the boiler shell, and an input on Terminal 93 initiates Warming.
		0	Disabled
		1	Enabled

Option No.	Factory Setting	Option Value	Description
41.	**0**		**Steam Boiler Sequencing** Options 41, 42, 43 and 44 are related to the "Standby Warming" Sequencing state. Option 42 enables an offset to be set relative to the Required value to generate a "phantom setpoint". During this "Standby Warming" operation the Boiler Control Circuit relay operates on the phantom setpoint. Options 43 and 44 are offset values above and below the phantom setpoint (i.e. Options 10 and 11 are not used for the phantom setpoint Boiler Control Circuit relay offsets). When a boiler is set to the "Standby Warming" state, by the M.M. Sequencing commands, it runs for a period of time at low flame and then off for a period. This action keeps the boiler warm. Option 53 sets the time interval that the burner is Off: Option 54 sets the time that the burner is On. If Option 41 = 0 only one boiler will be set to the "Standby Warming" state. Boilers further down the sequence will be set to the "OFF" state. In this case Options 53 and 54 set the ON and OFF time. (If Options 41 and 53 are 0 then Hot Water Sequencing is implemented).
		0	3 State Steam Sequencing. ON, Standby/Warming , Off
		1	2 State Steam Sequencing. ON, Standby/Warming
42.	**20**		**Phantom Setpoint.** Offset below normal Required value.
		0-100	If Centigrade, Fahrenheit or p.s.i. units effective.
		0-10.0	If Bar units effective.
43.	**5**		**Offset above phantom setpoint when Boiler Control Circuit opens.**
		2-50	If Centigrade, Fahrenheit or p.s.i. units effective.
		0.2-5.0	If Bar units effective.
44.	**5**		**Offset below phantom setpoint when Boiler Control Circuit closes.**
		2-50	If Centigrade, Fahrenheit or p.s.i. units effective.
		0.2-5.0	If Bar units effective.
45.	**0**		**External Modulation:** If this option is enabled, the usual P.I.D. control is disabled and the percentage of firing is set by an external controller applied to the appropriate input (terminals 7,8 & 9). This can be 0-10V, 2-10V, 0-20mA or 4-20mA representing low to high fire. See Parameter 69. The 10 point flow metering calibration must be entered for correct operation. See Option 57. Set Option 9 to 0 and fit both a working stat and high limit stat to turn the burner on and off.
		0	Disabled
		1	Enabled - input from auxilliary analogue input
46.	**0**		**Actual value displayed during External Modulation.** Load sensor input required to display Actual value.
		0	Required and Actual values displayed
		1	Required and Actual values not displayed

Option No.	Factory Setting	Option Value	Description
47.	**0**		**Cold Start Routine.** If the boiler temperature/pressure is at or below 30% of the target pressure/temperature then the burner would be held at low flame. If the boiler is at or below 60% of its target temperature/pressure then the burner firing rate would be held at 50% firing. When the boiler temperature/pressure exceeds the P Band offset in the PID philosophy then the burner would revert to normal PID load control.
		0	Off
		1	On
48.	**0**	0-120	**Flue Gas Recirculation - Timer.** This is the time that the MM elements (positioning motors/ac drives) are held at the FGR positions, after which modulation then takes place.
49.	**0**	0-50	**Flue Gas Recirculation - Offset.** This is an offset from the required value. The FGR positions are held until such time that the actual value reaches the offset value.
50.	**0**		**Flue Gas Recirculation - Flue Gas Tempertature.**
		0	Not optioned.
		1	Optioned. The FGR positions are held until such time as the flue gas temperature has reached 120°C. (An EGA must be present and optioned).
51.	**0**		**Units of Temperature**. NB. When changing units adjust all other relevant options respectively.
		0	All temperature readings displayed in Celsius.
		1	All temperature readings displayed in Fahrenheit.
52.	**0**		**Units of Pressure.** NB. When changing units adjust all other relevant options respectively.
		0	All pressure readings displayed in Bar.
		1	All pressure readings displayed in p.s.i.
53.	**1**		**Steam Boiler Sequencing Burner Off Time:** The steam boiler type sequencing is enabled by setting Option 1 to a respective pressure sensor. Options 42, 43 and 44 are relevant to the "Standby" boiler operation.
		1-200	Burner "Off" time (minutes) during warm up cycle. (Intelligent Boiler Sequencing. Steam boiler applications).
54.	**5**		**Burner 'On' Time**
		1-30	Burner "On" time (minutes) during warm up cycle. (Intelligent Boiler Sequencing. Steam boiler applications).
55.	**0**		**Internal PID/External Modulation Selectible using terminal 88.** (Cannot be used with Sequencing/IBS)
		0	Normal operation, Internal PID or External Modulation if Option 45=1.
		1	Terminal 88 = 0 V - internal PID. Terminal 88 = Line Voltage - External Modulation, CR1 always closed.

Option No.	Factory Setting	Option Value	Description
56.	**1**		**Operation of Alarm Output, Terminal No 79., NB this is a switched neutral and not a voltage output terminal:**
		1	Relay normally Off, On when Alarm.
		2	Relay normally On, Off when alarm.
57.	**0**		**Flow Metering:** If the Air window shows 57 and the Required window shows 1 when ENTER is pressed to store the Options then the 10 point calibration procedure will be invoked the next time the burner starts.
		0	No Flow Metering.
		1	Flow Metering Operates.
		2	Totalised Flow Metering reset to zero for fuel selected
58.	**15**		**Flow Metering Calculation Delay.** Number of seconds from ignition to flow metering calculation starts.
		0-60	Seconds.
59.			**Unused.**
60.	**0**		**Hand/Auto Bumpless Transfer Operation.**
		0	Fuel valve goes directly to last set Hand position.
		1	Hand position (taken on present fuel valve position when changing from Auto to Hand operation).
		2	As 0, but Hand position is not stored in permanent memory.
61.	**1**		**Flow metering units fuel 1 - Gaseous**
		0	Cubic feet
		1	Cubic meters
		2	Kilograms
		3	Litres
		4	US gallons
62.	**3**		**Flow metering units fuel 2 - Liquid**
		0	Cubic feet
		1	Cubic meters
		2	Kilograms
		3	Litres
		4	US gallons
63.	**3**		**Flow metering units fuel 3 - Liquid**
		0	Cubic feet
		1	Cubic meters
		2	Kilograms
		3	Litres
		4	US gallons

Option No.	Factory Setting	Option Value	Description
64.	**1**		**Flow metering units fuel 4 - Gaseous**
		0	Cubic feet
		1	Cubic meters
		2	Kilograms
		3	Litres
		4	US gallons
65-66.			**Unused.**
67.	**1**		**Purge Position:** The following Options tell the M.M. which channels are to be included in the Purge sequence. (See Option 5 for Purge Position).
		0	Channel 1 to Purge position.
		1	Channel 1 to remain closed for Purge.
68.	**0**		**Channel 2 Purge position.**
		0	Channel 2 to Purge position.
		1	Channel 2 to remain closed for Purge.
69.	**0**		**Channel 3 Purge position.**
		0	Channel 3 to Purge position.
		1	Channel 3 to remain closed for Purge.
70.	**0**		**Channel 4 Purge position.**
		0	Channel 4 to Purge position.
		1	Channel 4 to remain closed for Purge.
71.	**0**		**Fuel 1 - Fuel type.**
		0	Natural gas
		3	Fuel 1
			Do not use any other values.
72.	**1**		**Fuel 2 - Fuel type.**
		1	Light Distillate Oil
		2	Heavy Fuel Oil
		3	Fuel 2
			Do not use any other values.
73.	**1**		**Fuel 3 - Fuel type.**
		1	Light Distillate Oil
		2	Heavy Fuel Oil
		3	Fuel 3
			Do not use any other values.
74.	**0**		**Fuel 4 - Fuel type.**
		0	Natural gas
		3	Fuel 4
			Do not use any other values.

Option No.	Factory Setting	Option Value	Description
75.	**0**		**Purge Motor Travel Speed:** During a Purge Sequence the Motor Travel Speed can be set independent of Option 2. This affects all selected channels.
		0 -100	0 = Quickest time, 100 = Slowest time.
76.	**0**		**Unused.**
77.	**0**		**Burner Rating Units.** Display purposes only for Flow Metering.
		0	KW x 100 /hr
		1	Kg x 100 /hr
		2	MW /hr
		3	Btu x100 /hr
		4	Hp x100 /hr
		5	lbs x 100 /hr
78-85.			**Unused.**
86.	**0**		**Channel 1 Softened Error checking Select -** increases positioning error fom 0.1° to 0.5° for Industrial motor
		0	CH1 normal positioning motor.
		1	CH1 industrial positioning motor/softened error checking.
87.	**0**		**Channel 2 Softened Error checking Select .**
		0	CH2 normal positioning motor.
		1	CH2 industrial positioning motor/softened error checking.
88.	**0**		**Channel 3 Softened Error checking Select.**
		0	CH3 normal positioning motor.
		1	CH3 industrial positioning motor/softened error checking.
89.	**0**		**Channel 4 Softened Error checking Select .**
		0	CH4 normal positioning motor.
		1	CH4 industrial positioning motor/softened error checking.
90-109.			**Unused.**
110.	**1**		**Burner control.**
		1	Internal - Standard Scanner
		2	Internal - Self-check Scanner
111.	**0**		**Pilot**
		0	Interrupted pilot
		1	Intermittant pilot (expanding flame)

Option No.	Factory Setting	Option Value	Description
112.	**40**	20-100	**Pre purge time** Seconds
113.	**3**	3-5	**Pre ignition time.** Time ignition transformer is on before gas valve opens. Seconds
114.	**3**	3-10	**First safety time.** Time pilot valve is open before UV is checked. Seconds
115.	**3**	3-5	**Pilot prove time. (Pilot trial for ignition PTFI)** Seconds
116.	**3**	3-10	**Fuel 1 & Fuel 4 Second safety time (Main trial for ignition MTFI).** (Not Applicable to expanding flame - see option 111) Seconds
117.	**5**	5-20	**Main flame prove time.** Seconds
118.	**0**	0-100	**Post purge time** Seconds (0 - No post purge)
119.	**10**	3-120	**Control Box Recycle time.** Time delay from burner shut down to startup. Seconds
120.	**10**	5-50	**UV Threshold** Flame Signal Strength below which considered to be flame failure.
121.	**5**	5-10	**Delay from start of pre-purge after which air switch checked** Seconds
122.			**Unused.**
123.	**3**	3-15	**Fuel 2 & Fuel 3 Second safety time (Main trial for ignition MTFI).** (Not Applicable to expanding flame - see option 111) Seconds
124 -149.			**Unused.**
150.	**0**	0 - 10 5	**Clear ALL Commissioning Data and restore Options/Parameters to factory settings.** Range Clear Commissioning Data

FOR SAFETY REASONS OPTIONS 110 TO 150 ALSO HAVE TO BE ENTERED IN AS PARAMETERS. IT IS THE COMMISSIONING ENGINEER'S RESPONSIBILITY TO ENSURE ALL SETTINGS ARE IN ACCORDANCE WITH THE APPROPRIATE STANDARDS.

2.15.2.2 Parameters

To Select Parameter Mode.
Ch1, Ch2, Ch3 refer to the rows of buttons respectively starting with CH1 at the top.

Parameter values can be changed by entering the Parameter mode. The password must first be entered. To enter the password follow the steps listed.

Either deselect and then select fuel or power down and then up.

If system is already commissioned, press COM before the COM l.e.d. stops flashing.

If system is not already commissioned, commissioning mode will be set automatically.

The password screen is displayed.

```
PASSWORD                0
PASSWORD                0
F1  COMMISSIONED       23
```

Use the CH1 and CH2 buttons to set the Password codes. Then OPEN press CLOSE and buttons simultaneously.

The parameters screen will then be displayed as below:

```
PARAMETERS No   1-   3
```

Rows 2, 3 & 4 display textual descriptions of the parameter number and value.

To change Parameter number use the CH2 buttons.

To change value use the CH3 buttons.

Any number of Parameter values can be changed when in Parameter mode.

When changes have been made press ENTER MEMORY

All new Parameter values are then permanently stored.

The operation of the Mini MK6 parameters are similar to the MK6. For further information refer to section 2.14.2.5.

2.15.2.3 Fuel Flow Metering

1. Go to Options, set Option 57 to 1 (default 0).

2. When the above is displayed press [ENTER / MEMORY], this will initiate the Flow Metering setup mode.

3. The next time the burner starts and reaches modulation, the M.M. will automatically go into the ten point setup mode for Flow Metering. The following screen will be displayed:

```
COMMISSION FLOW
CHANNEL 1          80.0
POINT NUMBER          1
FLOW VALUE        68.16
```

4. In this mode the display will show the channel 1 fuel valve position in degrees angular, and the flow units which can be adjusted by using the third row of buttons.

   Note:

   a) The third row of text confirms to the commissioning engineer which of the 10 points are currently being measured.

   b) The minimum numerical value for fuel flow that can be entered into memory is 0.01.
   The maximum numerical value for fuel flow that can be entered into memory is 999.99.

   c) The values are entered in descending order, i.e. Point No.1 is maximum flame and Point No.10 is at minimum flame. The 10 sequential points on the load index are allocated automatically by the M.M. All values are in units/minute.

5. When fuel flow has been calculated or read off of a commissioning fuel flow meter the value is entered as detailed in Point No.4.

   The [ENTER / MEMORY] button is then pressed and the value is logged in the M.M. memory.

6. The above detailed data entry routine is repeated until all 10 points have flow values allocated to them.

7. When the last (10th) point has been entered the burner continues to fire.

8. To display Fuel Flow Metering press [FUEL METERING] button.

9. To reset the Totalised value to zero set Option 57 to 2, press [ENTER / MEMORY] while 57 and 2 are being displayed.

10. To ensure maximum accuracy, Option 58 can be altered from its default value (15). This is the delay time from the flame failure control box starting the combustion sequence to the main flame being established. (This option is only of relevance when an external burner control is being used).

2.15.3 End User Day to Day Operation

2.15.3.1 Normal Run Operation

Upon initial selection of a commissioned fuel, a logo screen flashes up followed by the 'MM STATUS' display. The COM l.e.d. flashes for five seconds.

To adjust the Required value press DISPLAY STATUS and use the third row accordingly.

The same method of adjustment is used when the second setpoint is selected (via terminal 87).

The range of the required value is limited according to the type of sensor being used (See Option 1).

If the burner control circuit is closed the burner system will sequence through the burner start up procedure. The system purges and ignites, and twenty seconds (nominal) after ignition the system modulates. Values are displayed according to the selected screen. There are a number of possible screens as shown on the next page. To select one of the display modes just press:

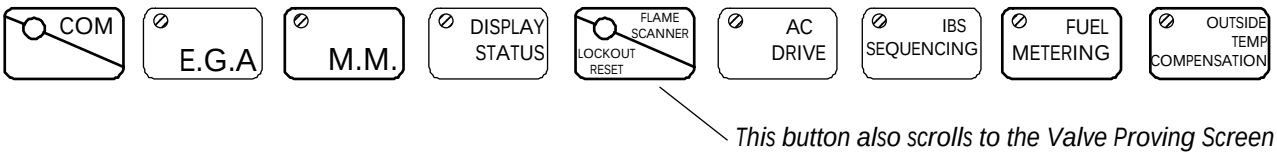

Pressing the bottom row button will display the logo screen.

The respective l.e.d. will remain illuminated to indicate which mode is selected. The COM and E.G.A. modes are only selectable if an E.G.A. is optioned on the system.

In the event of the system being powered down, these selections will be memorised as is all commissioning data, Options and required value. During normal run operation the RUN led is on all the time. When no fuels are selected only the RUN l.e.d. remains illuminated.

If an E.G.A. is operative on the system it will calibrate every time the burner starts and stops. When COM or EGA display modes are selected CAL is displayed when the EGA is calibrating. If the E.G.A. is cooling, COOL is displayed. If the burner is not firing, EGA is displayed. When the burner is firing both modes show E.G.A.. if the Actual value has not reached the value at which trimming is permitted. (See Option 28.) If an E.G.A. error has occurred the error code number is displayed if either of EGA or COM modes are selected.

The software version number can be displayed by by pressing the Top CH1 buttons simultaneously, when in the MM display mode.

Several different displays are available to provide the operator with information through start-up and normal operation.

Selectable screens provide the following information:

Startup/Fuel Select

```
      AUTOFLAME
      MINI   MK6
      COMBUSTION
 MANAGEMENT   SYSTEM
```

Displayed at startup and when no fuel selected.

M.M. Status

```
CHANNEL 1          80.0
CHANNEL 2          42.0
CHANNEL 3          37.6
     LOW FLAME HOLD
```

Shows the angular value for each of the positioning motors, channels 1 to 4. The bottom row displays additional status information, including Low Flame Hold, Hand Operation, Golden Start, FGR Start.

IBS Status

```
ID   1        LEAD      2


STATUS   STANDBY
```

For a multi boiler installation, this screen shows which is the lead boiler plus information on temperature and pressure set points.

EGA On Line Values

```
O2     4.3%  CO2     9.4%
CO    12ppm  NO     30ppm
AMB     22C  DELTA  269C
EXH    291C  EFF    77.8%
```

When an Exhaust Gas Analyser (EGA) is included in the system, this screen shows the actual values of the gases being measured in the flue plus the exhaust gas temperature, ambient temperature, dT, and efficiency. A similar screen shows the commissioned values.

Lockout History

```
No  1  10:00  23:JUN:00
RES    10:05  23:JUN:00
NO  FLAME  SIGNAL
FIRING
```

Upto the last 16 lockouts are displayed here. Details include time and date of lockout and reset, the cause of the lockout and at what stage of the sequence the lockout occured. Only one lockout record can be displayed at a time. Press the flame scanner button to scroll through the records.

Fuel Metering Status

```
FUEL 1   NATURAL  GAS
FLOW UNITS   CU  MTRS
FLOW RATE/MIN   20.00
TOTAL          4856.7
```

This screen displays which fuel is currently selected, the consumption at this point in time and the total fuel used to date.

System Status

```
FUEL 1  NATURAL  GAS
FIRING  RATE       100%
REQUIRED           82  C
ACTUAL             45  C
```

This screen shows the present firing rate, which fuel is being used, and the required/actual values.

History

```
HISTORY  FUEL  1
HOURS  RUN          1763
STARTUPS             276
```

The hours run and the number of startups for the currently selected fuel are displayed on this screen. The screen is selected by pressing the display status button.

Burner Control Status / Time

```
FIRING
FLAME  SIGNAL        27

TIME  12:25  23:JUN:00
```

Row 1 indicates the burner sequence state, row 2 gives the flame signal strength.

2.15.3.2 Routine Adjustments

Setting Time & Date

To adjust the time and date settings go into COM mode. Power down the unit and restart. The COM LED will be flashing and you have 5 seconds to press it. Then the password screen is displayed. Set password to: **10 10**, Press CLOSE

'Set Clock' screen is displayed:

```
DAY     FRI  DATE    23
MONTH   JUN  YEAR    00
HOURS    12  MINS    28
```

Use the buttons as detailed below to adjust the values appropriately.

Channel 1		Day
Channel 2		Date
Channel 3		Month
Channel 4		Year
HIGH	START	Hours
OPEN	CLOSE	Minutes

When finished press the flashing ENTER MEMORY button to submit to memory.

Note: Hours are displayed in 24 hour mode.

Adjusting the Screen Contrast

Hold down any of the screen select buttons,

FUEL METERING | IBS SEQUENCING | FLAME SCANNER LOCKOUT RESET | DISPLAY STATUS | E.G.A | M.M.

and then use the top row to adjust the contrast accordingly.

Calibrating Actual Pressure Reading

A facility exists to adjust small errors in the pressure value displayed in the Actual window.

To increase the value press RUN and the Ch3 simultaneously.

To decrease press RUN and the CH3 . The facility does not work on temperature.

2.15.3.3 EPROM Version Numbers

To display the software version number select the MM Display screen, then press Channel 1 Up and Down simultaneously.

```
S O F T W A R E

m i n i 6   B C      4 1 . 0 1
m i n i 5   M M      4 2 . 0 2
```

2.15.4 OTHER INFORMATION AND ILLUSTRATIONS

2.15.4.1 Mini Mk.6 MM Facia

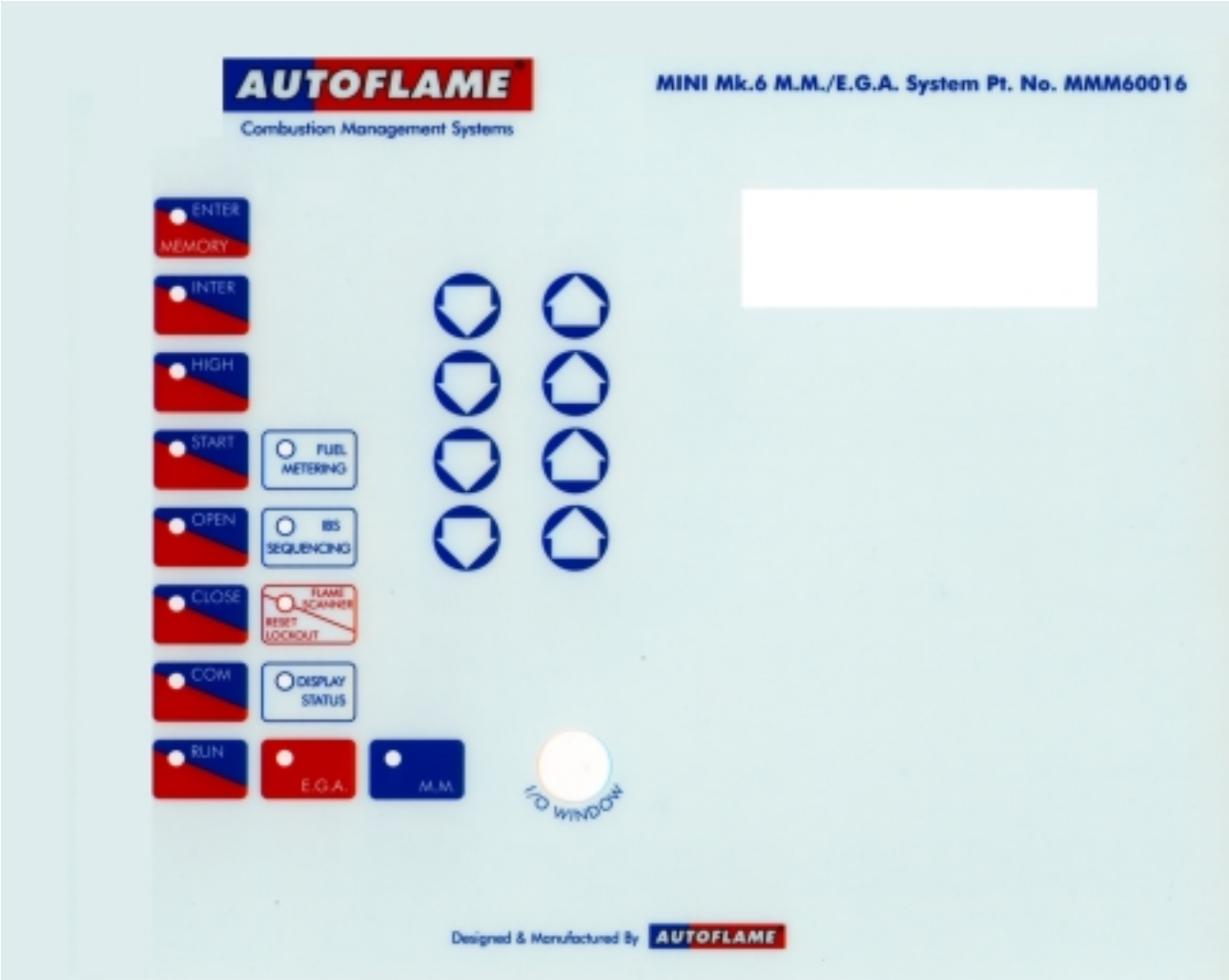

2.15.4.2 Schematic Connection Diagram - 240V

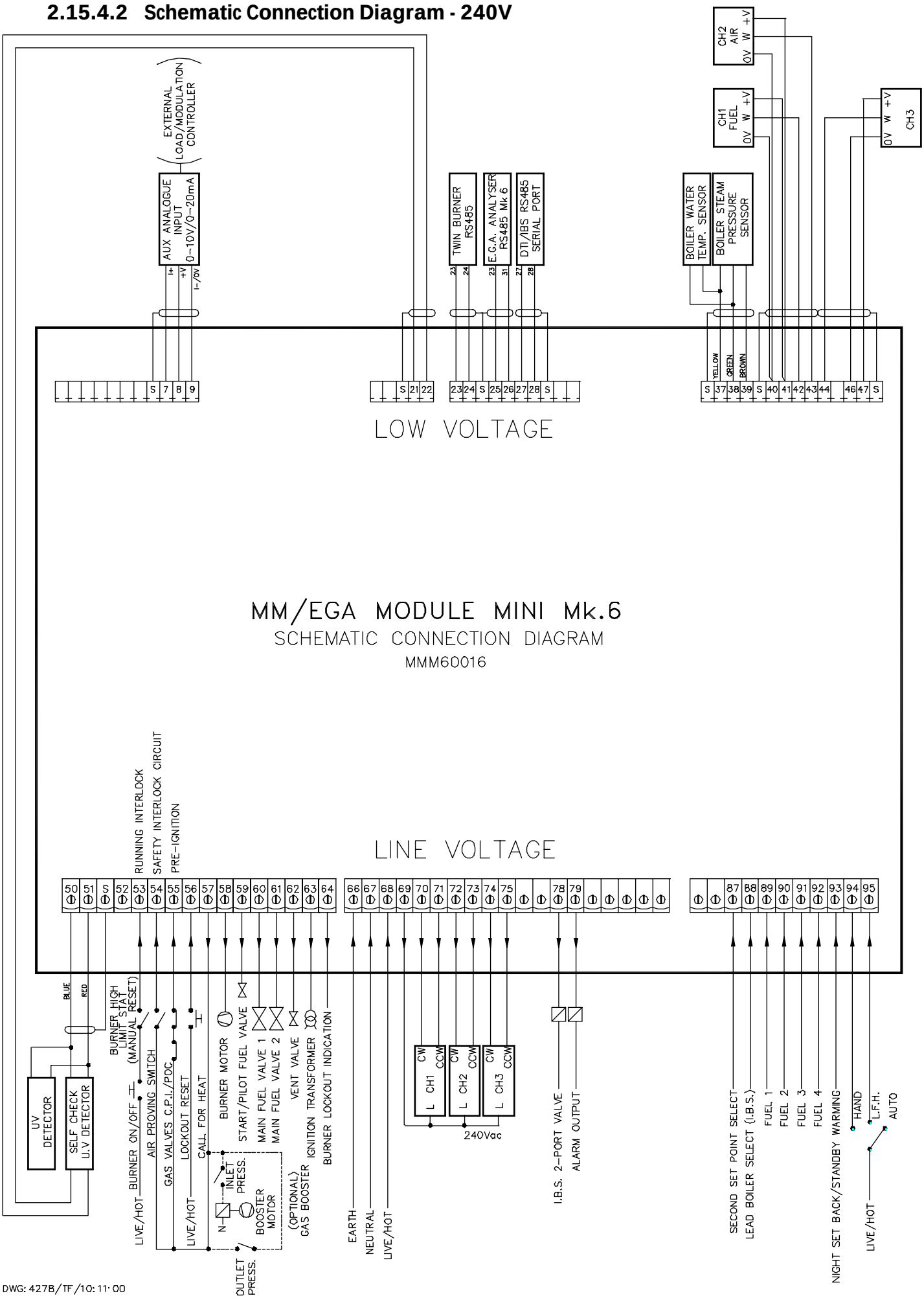

2.15.4.3 Schematic Connection Diagram -110V

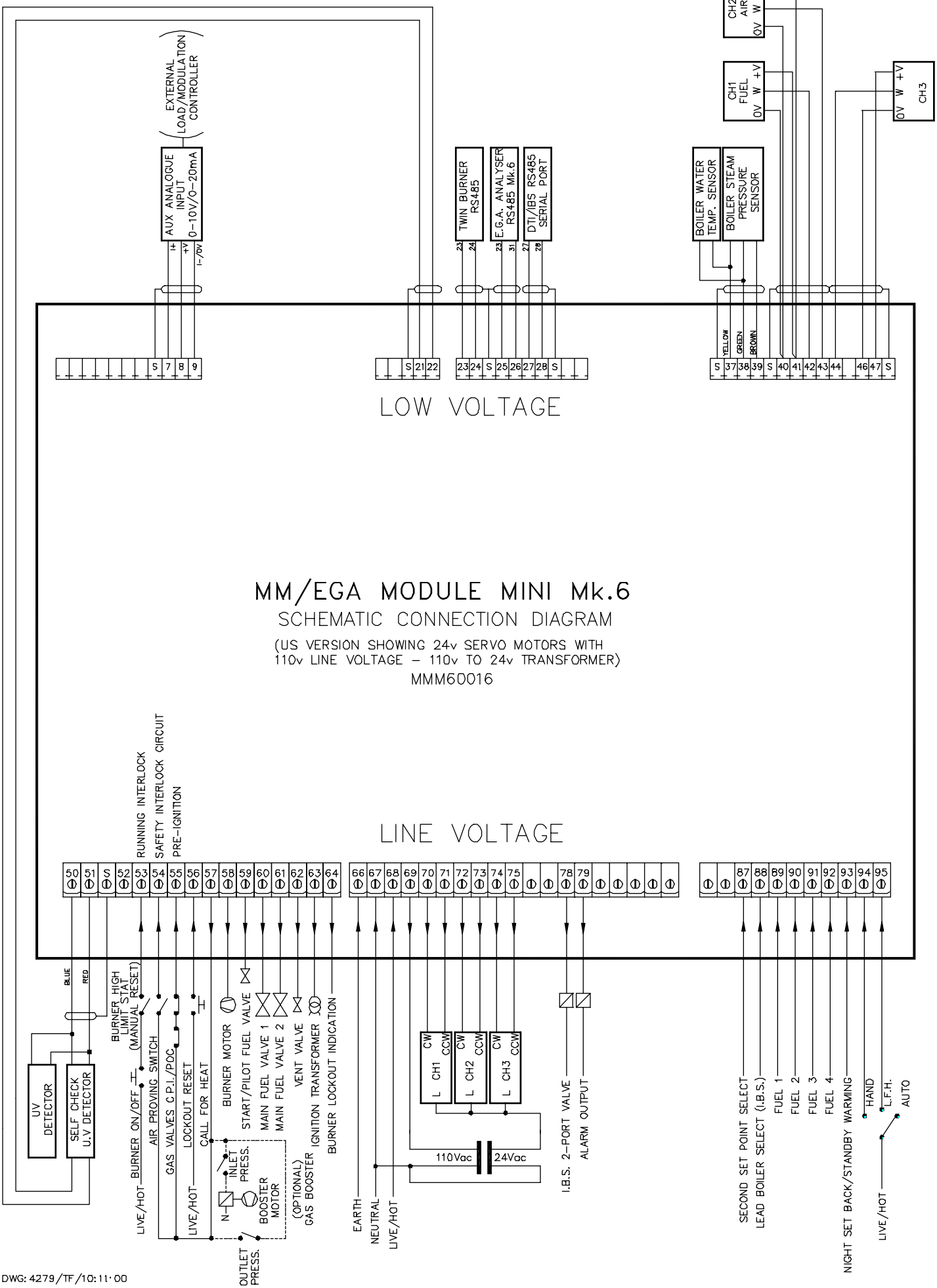

DWG: 4279/TF/10:11·00

Section 3: E.G.A. Exhaust Gas Analysis

Section 3: E.G.A. Exhaust Gas Analysis.

3.1 Introduction

3.1.1 Features and Benefits

The E.G.A. Mk.6 is the accomplishment of ten years on-going research and development for the exhaust gas sampling system. The E.G.A. can be used for two separate applications:

Application No.1: E.G.A. Stand alone

Stand alone sampling system. The emissions levels can be accessed via:
The remote display pod, local to the installation (max. distance 15m)
The 6 channel 4-20mA signals, user configurable.(max. load 250 Ohms each)
The Data Transfer Interface module (D.T.I.), this enables connection to a PC,BMS,PLC,Etc.

Application No.2: E.G.A. combustion trim

Interfaced with the Micro Modulation (M.M.) system enabling combustion trim. The combustion levels can be accessed via:
The Micro Modulation Unit. Commissioned and actual values.
The 6 channel 4-20mA, user configurable.
From the M.M. unit via the D.T.I. unit to a PLC

Monitoring Capabilities.

O_2	Oxygen	% by volume
CO	Carbon Monoxide	ppm
CO_2	Carbon Dioxide	% by volume
SO_2	Sulphur Dioxide	ppm
NO	Nitrogen Oxide	ppm
Combustion Efficiency		% (a calculation of CO_2 and Temperature)
Exhaust gas temperature		Degrees: Celsius or Fahrenheit

SO_2 and NO are monitored only, not used as combustion trim.

3.1.2 Overview of system operation

The analyser samples the combustion gas via the stack mounted Sampling Probe (Pt. No.MM10003) purchased separately from the analyser. The exhaust gas is drawn from the stack by a pump mounted internally within the analyser. Ensure the supplied sample tubing is used between the sampling probe and the analyser, the internal diameter is 2mm, if a larger diameter tubing is used the sample gas remains resident in the tubing for a longer period, this will seriously effect the correct operation of the combustion trim.

Once the exhaust gas has entered the analyser the gas is reduced in temperature by the Chiller block, the chiller block serves two functions, reducing the gas temperature and removing the condensation from the gas prior to entering the sensors. The condensate accumulated in the chiller unit is drained every 4.5 minutes automatically.

The exhaust gas is then filtered through the Dry Filter, this is a fine filter which removes any dust particles carried over from the cooling process. On leaving the filter the exhaust gas is checked to ensure a vacuum is maintained prior to entering the Pump. On exiting the pump the exhaust gas is again checked to ensure the pump is producing a pressure. Both pressure switches indicate there operation by the status indication L.E.D.s. (located next to each pressure switch).

The conditioning process of the exhaust gas is now complete, the gases are now measured by the sensors. The exhaust gas now exits the sampling system from the clear tubing located at the rear of the Chiller Unit.

*important: The exhaust gas is vented into the air steam exiting the E.G.A. unit, this is located on the outside of the E.G.A. box next to the Drain Solenoid outlet. It is extremely important that the exhaust gas is vented to atmosphere, i.e. Do not install the E.G.A unit within a sealed enclosure, this would cause the E.G.A. unit to self calibrate on contaminated gas. The E.G.A. unit will self calibrate every 6 hours or when the burner starts and stops.

3.1.3 EGA MK6 an Inside View (cover removed)

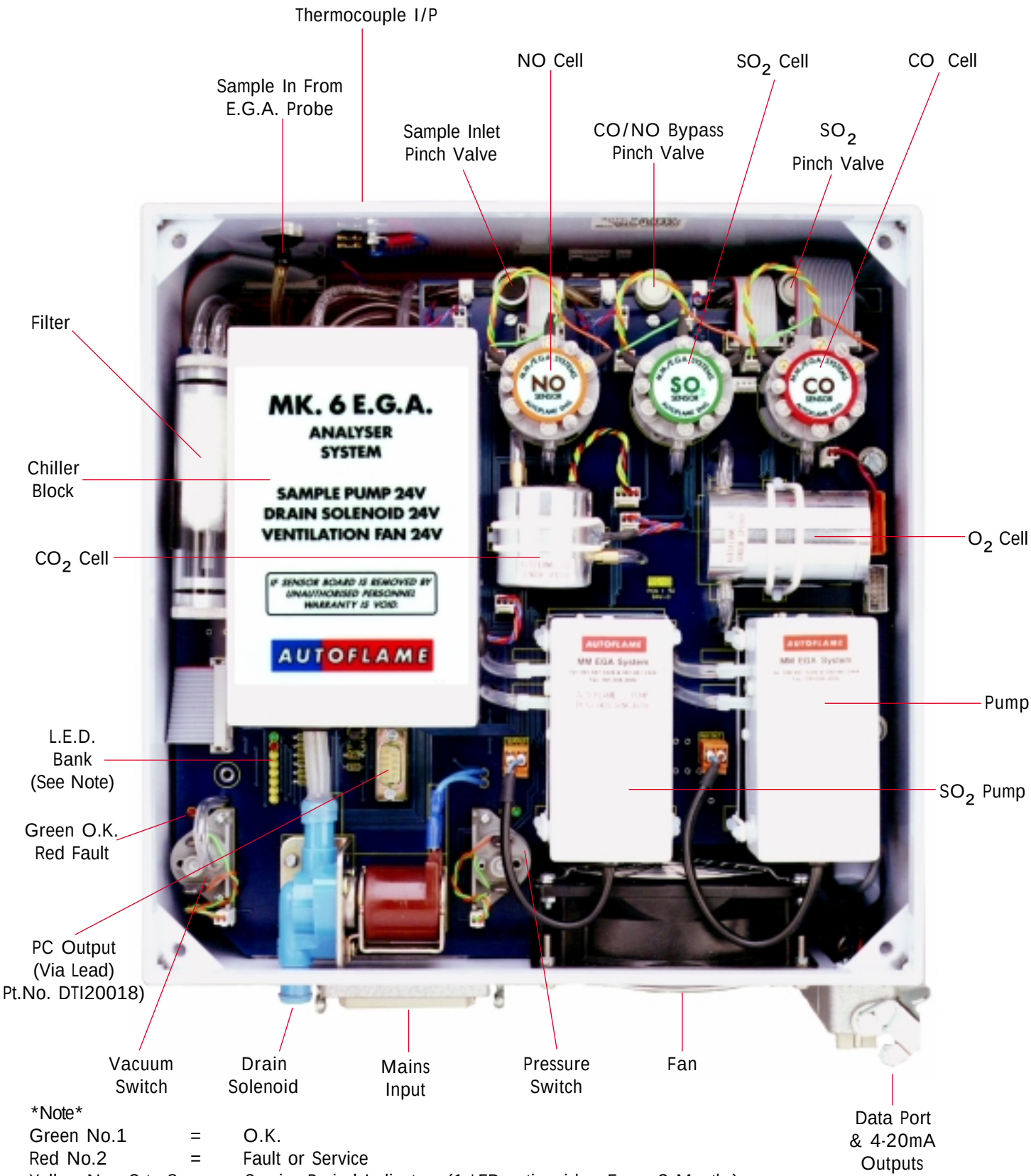

Note

Green No.1	=	O.K.
Red No.2	=	Fault or Service
Yellow No.s 3 to 8	=	Service Period Indicators (1 LED extinguishes Every 2 Months)
Mains Supply	=	230V/110V Standard

3.1.3.1 EGA MK6 an Inside View (cover removed)

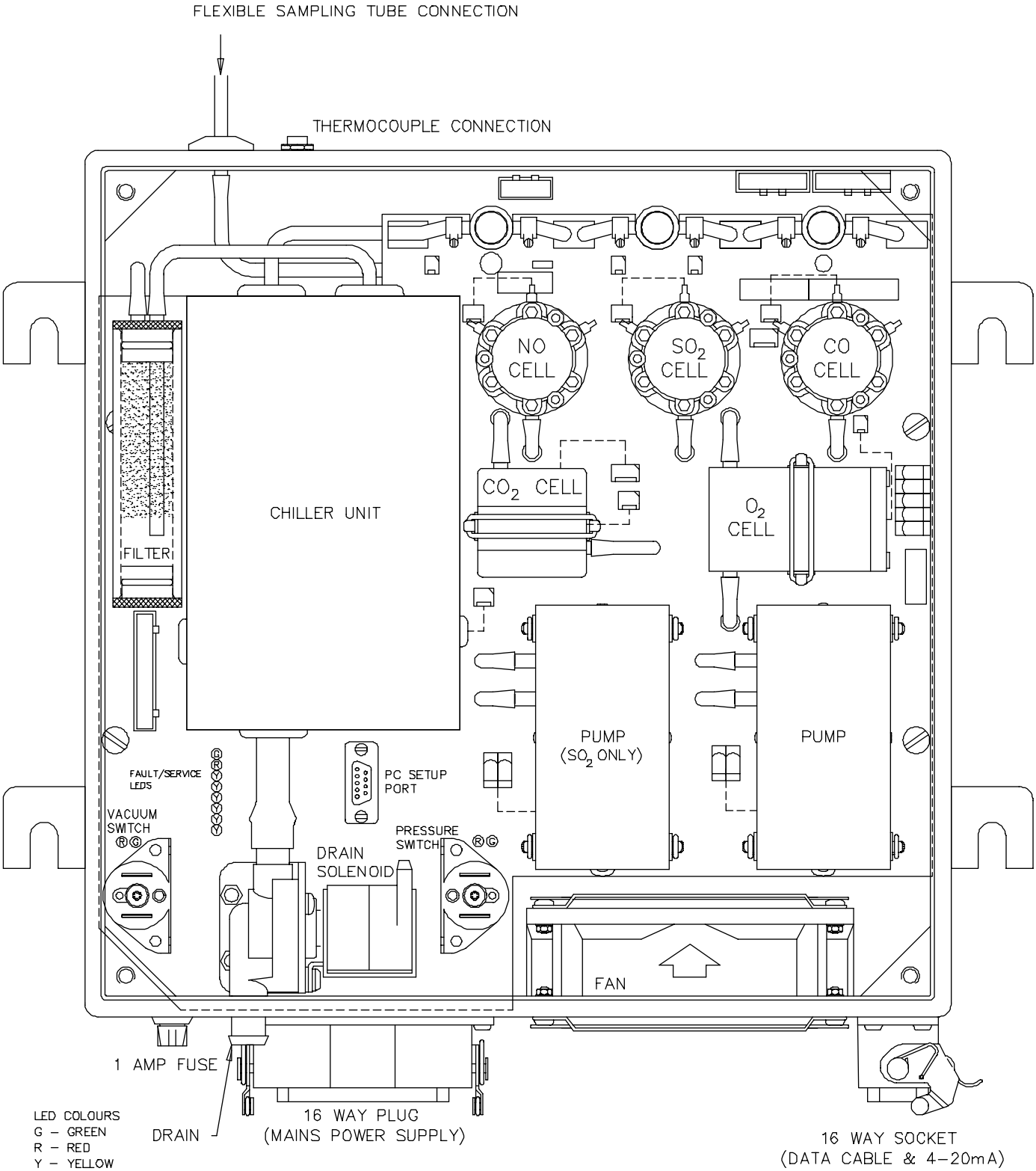

9:10:96/3070/GM

3.2 Sensor Characteristics

3.2.1 O_2 Sensor

This is a newly developed electrochemical cell used for the detection of oxygen covering a concentration range of 0 to 100%. Due to their construction they offer a long life and a high resistance when used with high sulphur content fuels. It is therefore suited to analysis when firing heavy or light fuel oil. The cell employs the principles detailed below:-

The oxygen sensor incorporates a lead oxygen cell with a lead anode and a gold cathode, using specific acid electrolyte. Oxygen molecules which diffuse through a non porous Teflon membrane into the electrochemical cell, are reduced at the gold electrode. The current flow between the electrodes is proportional to the oxygen concentrations in the flue gases measured.

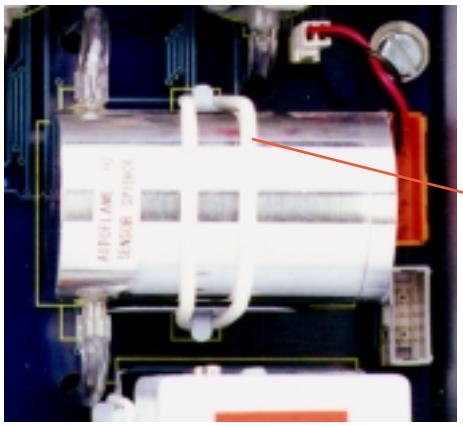

Features:

Virtually no influence from CO, H_2, S, NO**X,** SO**X** and H_2 i.e.; no cross sensitivity.
No warm up time required

Operation ranges:

Detection range	0-20.9% O_2
Accuracy	± 0.3%
Operating temperature	5°C to 40°C
Shelf life	6 months from date of dispatch

(In normal operation the Sensor has a life expectancy of 2 years & is guaranteed for 1 year.)

Long Term Output Drift.	< 1% Signal/Month typically.
	< 10% Over Operating life.

3.2.2 CO ,NO and SO_2 Sensors

These sensors are electrochemical cells which are specifically managed by the calibration philosophy within the E.G.A. unit. The accuracy of these sensors are within ±5% at 100ppm. From our experience over the last five years we would expect to see a drift of ± 10ppm per annum without calibration. In our view this drift would not be detrimental to the operation or application of the E.G.A. The life of the sensors is a function of the concentration of gases measured over time. In order to optimize the life of the CO cell, the electronics will detect when the signal level from the cell reaches or exceeds 600ppm and will isolate the CO & NO cells. The gas flow to these cells is restored once the O_2 & CO_2 readings are restored to a level within the pre-programmed limits.

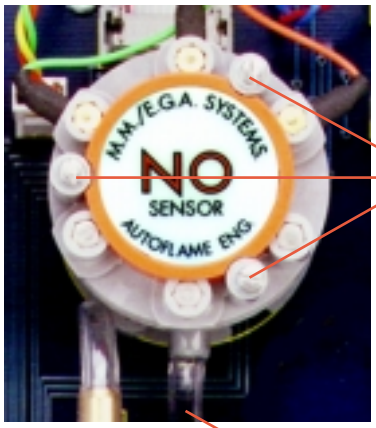

Retaining Screws, Remove when replacing Sensor

Input Tube

CO Measurement.

On Gas Fuel:	Measuring Range 0-1000ppm
On Fuel Oil	Optional, CO is not normally measured as standard
Resolution at 20 deg C	1ppm
Repeatability	1% of signal
Shelf life	6 months from date of dispatch

NO Measurement.

On Gas Fuel:	Measuring Range 0-1000ppm
On Fuel Oil	Optional, NO is not normally measured as standard
Resolution at 20 deg C	1ppm
Repeatability	2% of signal
Shelf life	6 months from date of dispatch

SO_2 Measurement.

On Gas Fuel:	Measuring Range 0-1000ppm
On Fuel Oil	Measuring Range 0-1000ppm
Resolution at 20 deg C	1ppm
Repeatability	1% of signal
Shelf life	6 months from date of dispatch

3.2.3 CO_2 Sensor

This is manufactured to an Autoflame specification and the technology employed is thermal conductivity. This sensor has no moving parts and is not an electrochemical cell. The exact description of how this works is commercially sensitive. The accuracy is ±0.3% of reading. The cross sensitivity is virtually zero to other gases due to the method of calibration used within the E.G.A. unit. The lifetime is not less than two years on gas firing, and on oil firing is dependent on the sulphur content of the fuel.

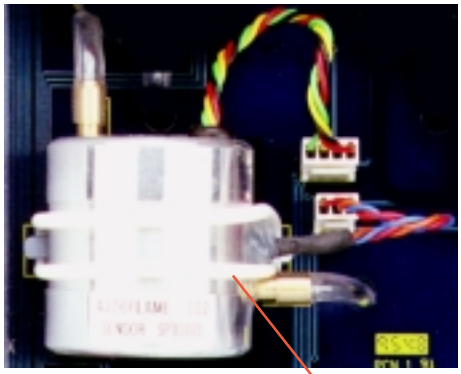

Retaining Band

Measuring Range:- 0-20%
Shelf life 12 months from date of dispatch

3.3 Commissioning and Setting up Procedures

3.3.1 Introduction

Commissioning with E.G.A. is an extension to commissioning with M.M. The operator must be completely familiar with the commissioning of the M.M. unit before commissioning with E.G.A. Section 2 of the Technical manual clearly explains commissioning with the M.M. unit.

The commissioning procedure as described must be strictly adhered to, anybody commissioning an M.M./E.G.A. system must have adequate understanding of combustion plant and be officially certified by Autoflame Eng. or their registered Distributors. In the wrong hands, hazardous conditions could be made to exist.

The fundamental idea of the system is to set a fuel valve position and then set a corresponding air valve position. Care must be taken when adjusting the fuel and air positions so as not to create any unstable combustion conditions, e.g. moving the fuel valve to the open position without increasing the air valve correspondingly.

If the system being commissioned is an M.M. without E.G.A. then a combustion monitor is required to check the exhaust gases. If the system does have an E.G.A. then a combustion monitor should not be necessary as the E.G.A. performs all normal exhaust gas measurements. When burning oil a smoke detection device is necessary to check smoke generated is within government guide lines.

Ideally, to implement commissioning as quickly as possible arrange for a substantial load on the boiler. The commissioning procedure can be interrupted due to excess temperature or pressure, causing the burner to turn off. In these instances the commissioning data accumulated so far is not lost. When the burner is called back on the system starts up automatically and commissioning can proceed from where it left off.

Once the burner has been fired the maximum fuel position is entered first then descending fuel positions are entered consecutively until finally a minimum fuel position is entered. The CH1 and CH2 positions must always be less than he ones previously entered. However with CH3 - CH8 it is possible to move the position above or below the previously entered points.

On a newly installed system the following procedures should be carried out as listed.

1. Check all interconnecting wiring between the M.M. and external components are correct.
2. Set Options required (Refer to Option Section).
3. Set up positioning motors.
4. Programme fuel/air positions.

3.3.2 Programming Fuel Air Positions (Systems with Exhaust Gas Analyser)

Note: Throughout the commissioning procedure the COM l.e.d. is illuminated.

1. Ensure 'stat' control circuit is closed.

2. Select fuel. CLOSE flashes. PAS is displayed in Actual display window.

   Note: If fuel selected is being re-commissioned, press COM *before COM l.e.d. stops flashing (five seconds).*

3. Enter Access Code. Adjust the numbers in the CH1 and CH2 Position windows using the respective buttons.

   When numbers are set, press CLOSE (CLOSE l.e.d. steady, ENTER flashes. CH1 and CH2 position windows indicate angular position of positioning motors.

4. Use CH1 and CH2 to set positioning motors to 0.0. Press ENTER MEMORY (OPEN flashes).

5. Press OPEN (OPEN steady, ENTER MEMORY flashes).

6. Use CH1 and CH2 to set positioning motors to their fully open positions.
This is nominally 90.0 for gas butterfly valves and burner air dampers.
(EGA will now carry out a "CAL" Calibration for 2 minutes)

   Press ENTER MEMORY (System purges, at end of purge START flashes).

7. Press START (START steady, ENTER MEMORY flashes).

8. Use CH1 and CH2 to set positioning motors to positions where ignition can take place.

9. Press ENTER MEMORY (Burner ignites, HIGH flashes).

10. Press HIGH (HIGH steady, MM steady, E.G.A. flashes).

11. Use CH1 and CH2 to set maximum firing input (do not exceed OPEN position values).

12. Press E.G.A. (HIGH steady, EGA steady, MM flashes)

Press [Exhaust Temp] or [Eff%] to select data displayed in exhaust/Eff. display window.

If readings satisfactory, go to Step 14. otherwise go to Step 13.

13. Press [M.M.] (HIGH steady, MM steady, EGA flashes).

    Make adjustments to fuel and/or air valve positions. Go to Step 12.

14. Press [ENTER MEMORY]

    The system will now carry out 'Auto Commission' routines. No operator intervention will be permitted during these. They take approximately two minutes. While they are taking place the EGA. and MM. l.e.d.s flash initially, then RUN and MM flash. When finished INTER flashes.

15. Press [INTER]

16. Use CH1 and CH2 to reduce the Fuel and Air positions.

17. Press [E.G.A.] (START or INTER steady, EGA steady, MM flashes).

    Observe combustion readings on O_2, CO_2, CO, Exhaust/Eff. display windows. Wait for readings to stabilise.

    Press [Exhaust Temp] or [Eff%] to select data displayed in exhaust/Eff. display window.

    If readings satisfactory, go to 20. otherwise go to 18.

18. Press [M.M.] (START or INTER steady, M.M. steady, E.G.A. flashes).

19. Use CH1 and CH2 to adjust valve settings. (Do not exceed previous entered values). Go to 17.

20. Press [ENTER MEMORY]

    The system will now carry out 'Auto Commission' routines. No operator intervention will be permitted during these. They take approximately two minutes. While they are taking place the EGA and MM l.e.d.s flash initially, then RUN and MM flash. When finished, INTER, or INTER and START will flash. (If START position has just been entered then RUN flashes).

Note: Only INTER flashes if the number of INTER positions entered so far is less or equal to three, thereafter INTER and START flash.

If the position just entered was the START position, go to 22. otherwise go to 21.

21. Press INTER or START (START or INTER steady, MM steady, EGA flashes).

    Go to 16.

22. Press RUN to set system into normal modulating mode.

23. If an EGA error occurs in commissioning mode, it cannot be reset using the "press close/open button". If the fault in the EGA can be cleared the error will reset automatically.

3.3.3 E.G.A. combustion trim operation

With the E.G.A. trim facility it is possible to expand the M.M. so it will measure and display O_2 , CO, CO_2 and exhaust gas temperature, together with boiler temperature or Pressure. At the same time the software within the M.M. unit will inflict minute corrections to the Channel 2 positions, Channel 2 would normally be controlling the air damper but could alternatively be controlling a variable speed drive. These minute changes ensure that the originally entered commissioning data is adhered to, irrespective of variations in stack pressure or barometric conditions.

The system trim function is achieved by every paired value for air and fuel having stored values for O_2 , CO_2 and CO at the commissioned value. Deviations from these ideal values are held and accessible via the "COM" button on the MM facia when in E.G.A mode, this data is integrated and expressed as a degree angular value, this ensures the exact amount of Channel 2 trim may be inflicted at any time to return the system to it's commissioned value at any load condition.

The E.G.A. control strategy operates error checking self diagnostic software for self identification of system component or data handling failure.

3.3.4 Trim Timing Operation

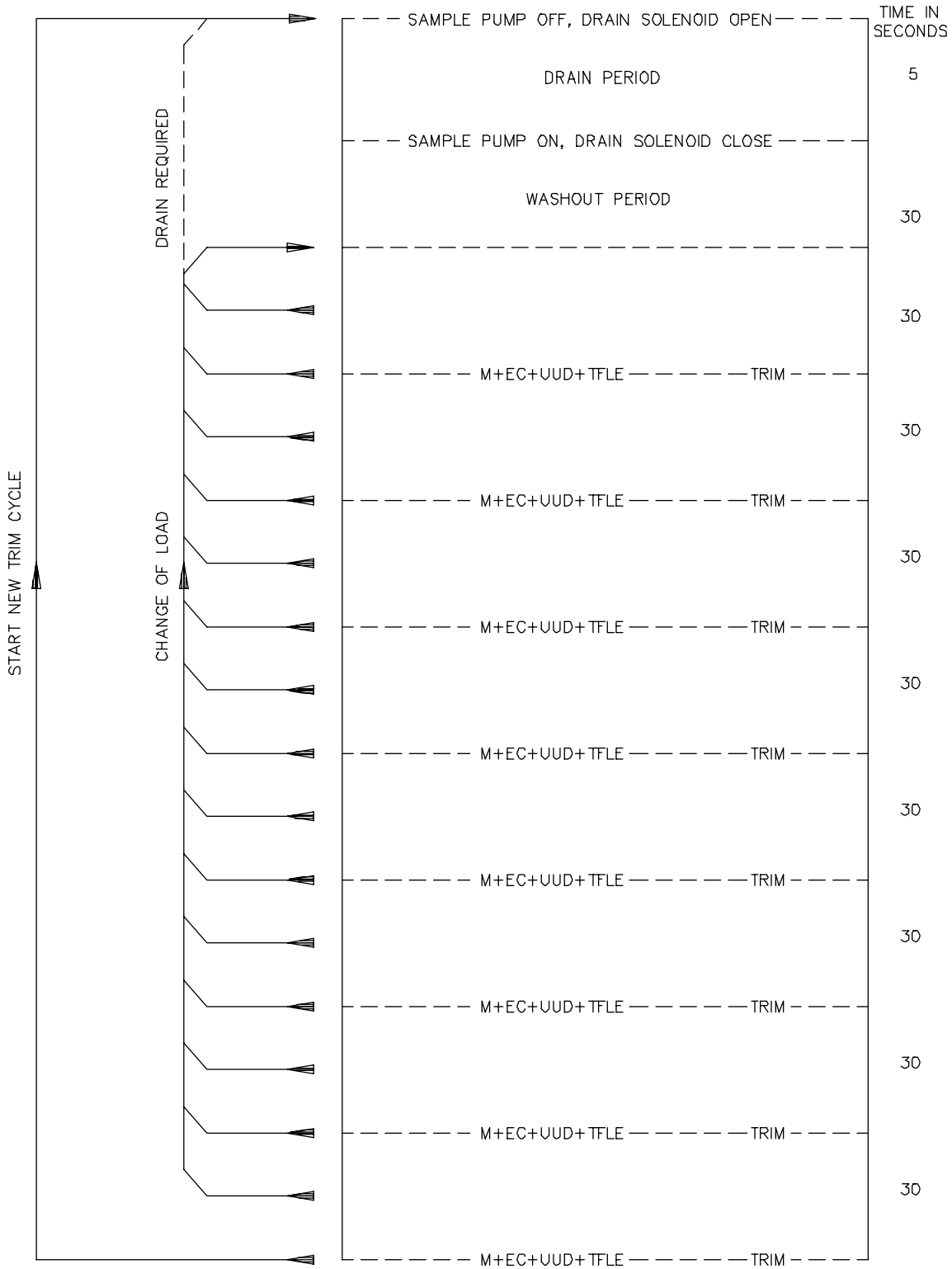

KEY:

EC = ERROR CHECKING
UDD = UPDATE DISPLAY
M = MEASURE
T = TRIM
TFLE = TEST FOR LIMITS EXCEEDED.

3.3.5 Graphical Trim Operation

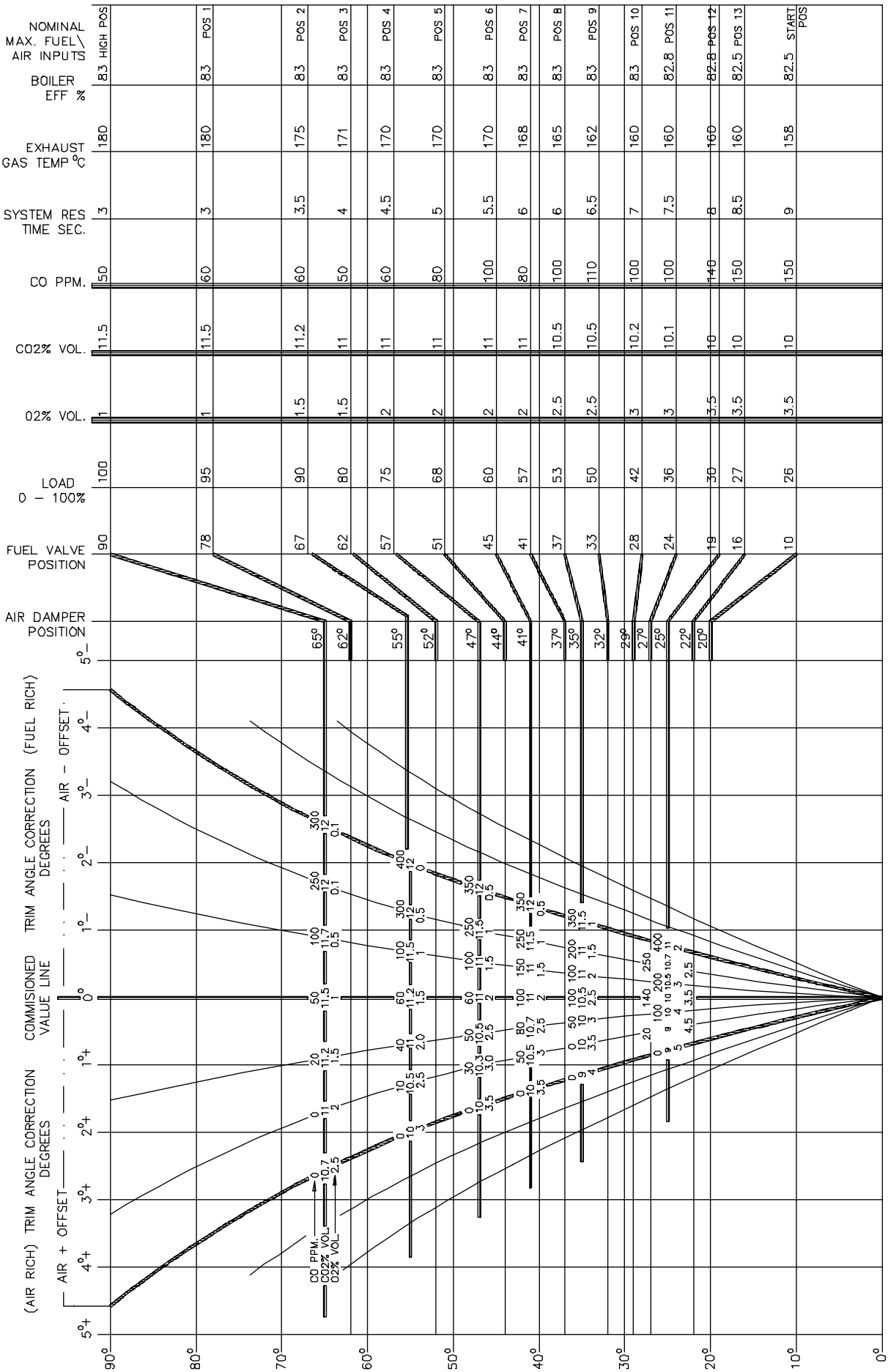

GRAPHICAL REPRESENTATION OF E.G.A. TRIM SYSTEM OPERATION

3.3.6 Combustion Efficiency Calculations

Based on dry gas.

English Calculation:

% Combustion Efficiency = 100 - (sensible heat loss + Hydrogen and moisture loss).

$$= 100 - \left(\left(\frac{K1\ (TG\text{-}TA) + (K2\ (1121.4 + (TG\text{-}TA))}{\%C02}\right)\right)$$

K1=0.38 Natural Gas(F1)
K1=0.56 Fuel Oil (F2/F3)

K2=0.0083 Natural Gas (F1)
K2=0.0051 Fuel Oil (F2/F3)

European Calculation:

% Combustion Efficiency = 100 - sensible heat loss

$$= 100 - ((TG\text{-}TA) \times ((A/(20.9\text{-}02)) + B))$$

A=0.66 Natural Gas (F1)
A=0.68 Fuel Oil (F2/F3)

B=0.009 Natural Gas (F1)
B=0.007 Fuel Oil (F2/F3)

TG: Flue Gas Temperature
TA: Ambient Air Temperature in Boiler House

3.3.7 Programming the EGA Display Pod

Changing Options and Parameters

The EGA Display Pod contains the same options & parameters as the Mk5 MM. Options 17 & 36 are used to set the Pod to display NO and monitor CO/NO on oil.

As with the Mk5 MM, COM mode must be selected. Power on the unit and Press the [GAS] button, PAS will be displayed. Enter the PAS code using:

Ch1 = [NO] Ch2 = [Exhaust ΔT] ENTER = [Eff %]

= [CO] = [GAS]

To access options mode Press [NO] & [OIL] together, OP is displayed.

To access parameters mode Press [Exhaust ΔT] & [Eff %] together, PAR is displayed.

Set options and parameters as required then press [Eff %] to enter new settings.

E.G.A. POD DIMENSIONS, ASSEMBLY & FIXING DETAILS

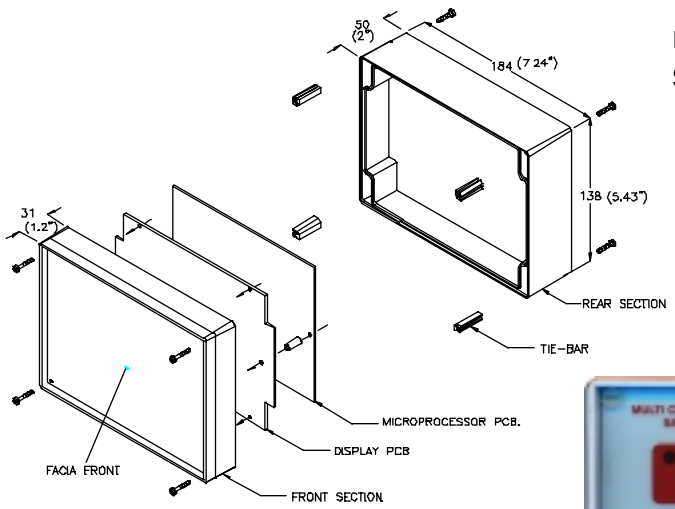

EGA must be set for Pod operation, pinch valves must be set if NO & CO are to be monitored on oil and Fuel selection must be specified (mains input or Pod).

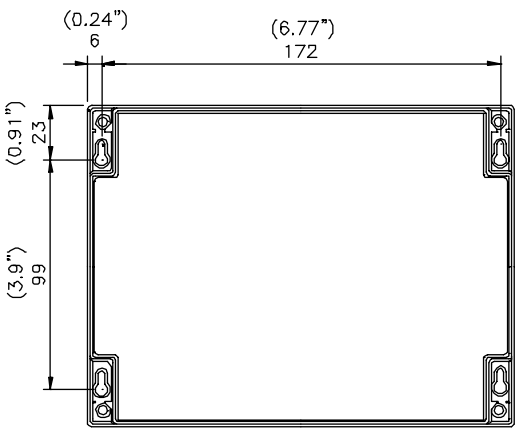

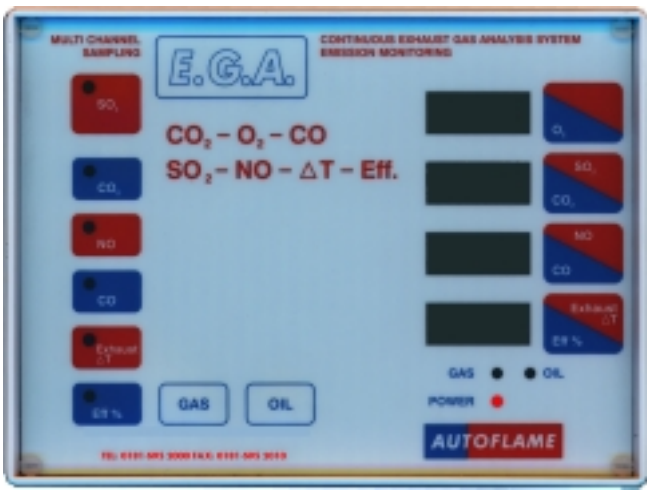

3.4 Error Checking, Self Diagnostics

3.4.1 Key To Errors Detected

Errors detected in the EGA part of the system are indicated when COM or EGA display modes are selected.

CH1 --- ERR
CH2 --- EGA
CH3 --- Error number

Error Number	Fault Description
01	No communications to EGA
08	O_2 Upper limit exceeded
09	CO_2 Upper limit exceeded
10	CO Upper limit exceeded
11	O_2 Lower limit exceeded
12	CO_2 Lower limit exceeded
14	O_2 Absolute limit exceeded (O_2 less than specified value)
15	CO_2 Absolute limit exceeded (CO_2 greater than specified value)
16	CO Absolute limit exceeded (CO greater than specified value)
20	Pump fault --- pump failed / sample system blocked
21	O_2 Cell failure
22	CO_2 Cell failure
23	CO Cell failure
24	Flow pressure switch failure.
25	Trim threshold exceeded.
30	NO Upper limit exceeded
33	Exhaust temperature upper limit exceeded
35	Exhaust temperature Absolute limit exceeded (Exhaust temperature greater than specified value)

If any of the above EGA errors occur the action taken will depend on the EGA option selected: (see Option 12).

In the event of a fault being detected by the internal fault diagnostic system, contact Autoflame for advice.

Sampling system should be carefully packed in the carton in which was supplied or similar and marked "Fragile - Scientific Instruments" and "Do Not Drop".

When plugs are removed to disconnect the sampling system, the M.M./E.G.A. control module will recognise that the sampling system has been removed and will run on M.M. values only. The fault Error Code, displayed on the M.M./E.G.A. module will remain displayed but only when the control unit is in the E.G.A. or commissioning display modes. When it is in the M.M. mode, all normal values and functions would be displayed. When the fault has been rectified on the sampling system and it is returned from your dealer, the E.G.A. sampling system can be plugged in and the M.M./E.G.A control module can be put into E.G.A. mode.

The Error Code that is displayed can be cleared by pressing " OPEN" and "CLOSE" simultaneously. The system will now operate normally in the E.G.A. mode and the displays will return to their normal function.

When first going into commissioning mode, the MM invokes an EGA calibration. If an error occurs at this stage it will be necessery to fix the EGA and set commissioning mode again (reselect fuel).

3.4.2 L.E.D. Status Indication

To assist the end user to determine the basic status and fault diagnosis, the P.C.B. is fitted with status indication in the form of L.E.D.s. The following indications are available:

Green	=	O.K. System operates correctly.
Red	=	Fault
Yellow	=	6 L.E.D.'s each L.E.D. indicates a 2 month operation period, (1 L.E.D. is extinguished every 2 months, note, this time is also active during storage)
Red	=	Pressure switch fail (located: right of drain solenoid)
Green	=	Pressure switch proved (located: right of drain solenoid)
Red	=	Vacuum switch fail (located: left of drain solenoid)
Green	=	Vacuum switch proved (located: left of drain solenoid)

see L.E.D. positions

Once all the yellow L.E.D.s have been extinguished the red L.E.D. will be illuminated, this is an indication that the analyser now requires servicing. The service must be carried out by an Autoflame certified technician or alternatively returned to our factory.

When both the Green & Red LED's are illuminated, this indicates that a service is required, the unit will continue to operate in this condition.

*** important:** when shipping the E.G.A. unit back to our factory, the unit must be returned in the original packaging, therefore avoiding additional charges due to transit damage.

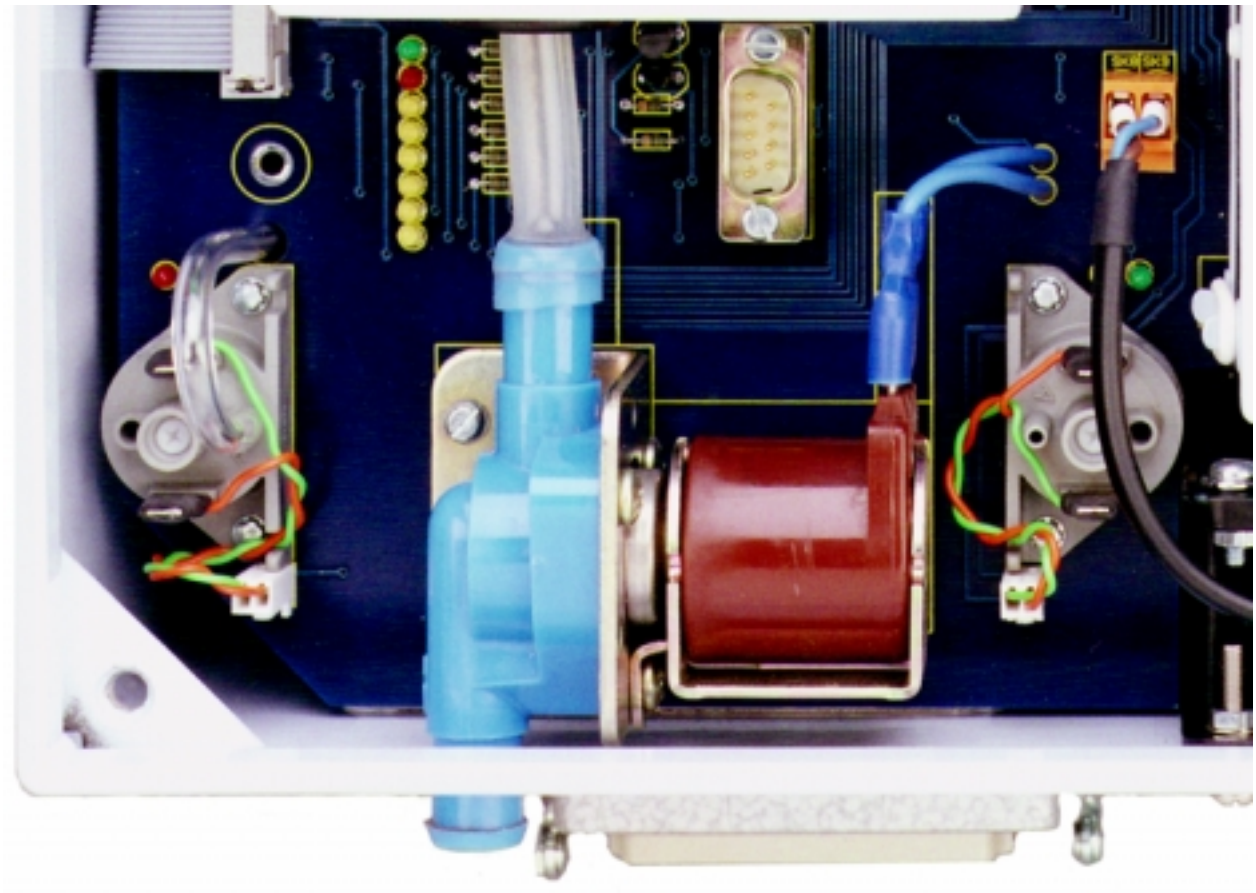

3.5 End User Day to Day Operation

3.5.1 Normal Run Operation

Upon initial selection of a commissioned fuel, the display shows F1, F2 or F3 depending on which fuel is selected. The COM l.e.d. flashes for five seconds. During this time a number is displayed in the Actual window. This number indicates the number of times this fuel has been commissioned. After these 5 seconds the M.M. positioning motor values are displayed.

To adjust the Required value press STATUS and use the required accordingly.

The range of the required value is limited according to the type of sensor being used (See Option section).

If the burner control circuit is closed the burner system will sequence through the burner start up procedure. The system purges and ignites, and twenty seconds (nominal) after ignition the system modulates. The four display windows will display values according to the selected display mode. There are four possible display modes: E.G.A. Commission values, E.G.A. Actual values, M.M. Positioning motor values and Status. To select one of the display modes just press:

COM E.G.A. M.M. or STATUS respectively.

The respective LED will remain illuminated to indicate which mode is selected. The COM and E.G.A. modes are only selectable if an E.G.A. exists on the system. In the COM and E.G.A. modes there is a further choice of either Exhaust temperature /Efficiency/CO/NO/SO_2. Select these by

pressing Exhaust Temp Eff % CO NO SO2 INTER accordingly.

In the event of the system being powered down, these selections will be memorised as is all commission data, Options and required value. During normal run operation the RUN led is on all the time. When no fuels are selected only the RUN LED remains illuminated.

If an E.G.A. is operative on the system it will calibrate every time the burner starts and stops. When COM or EGA display modes are selected 'CAL' is displayed in the Temp/Eff. window when the EGA is calibrating. If the E.G.A. is cooling, 'COOL' is displayed. If the burner is not firing, EGA is displayed in the top window. When the burner is firing and both the COM and E.G.A. modes show 'E.G.A.' in the top window, this indicates that the Actual value has not reached the value at which trimming is permitted. (See Option 28.) If an E.G.A. error has occurred, the error code number is displayed if either of EGA or COM modes are selected.

The software version number and issue can be displayed on the M.M. by pressing the Channel 1 simultaneously.

3.6 Electrical Schematics

3.6.1 Interconnection between Mk6 EGA and Mk6 MM Module

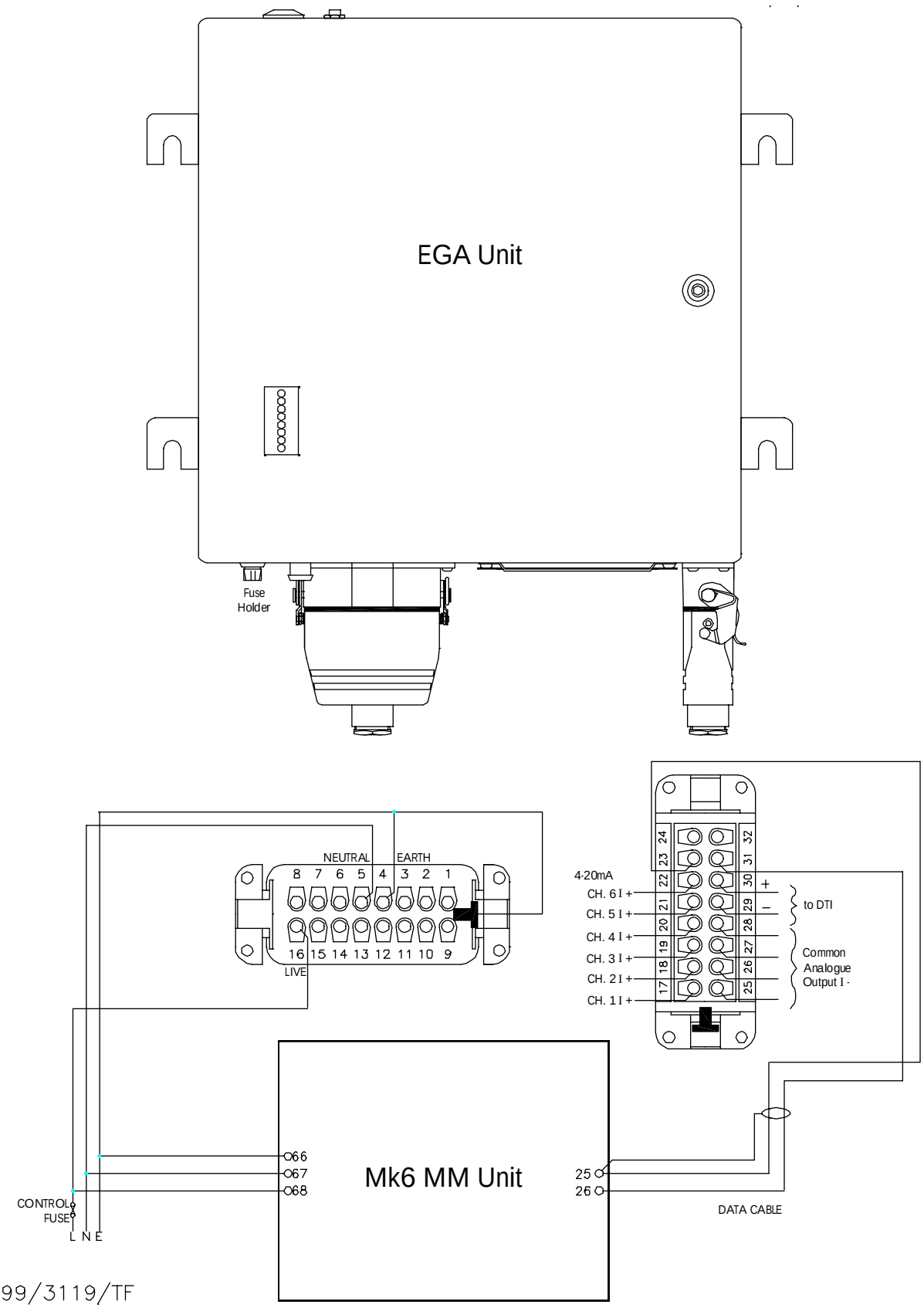

3.6.2 Interconnection between Mk6 EGA modules and DTI unit

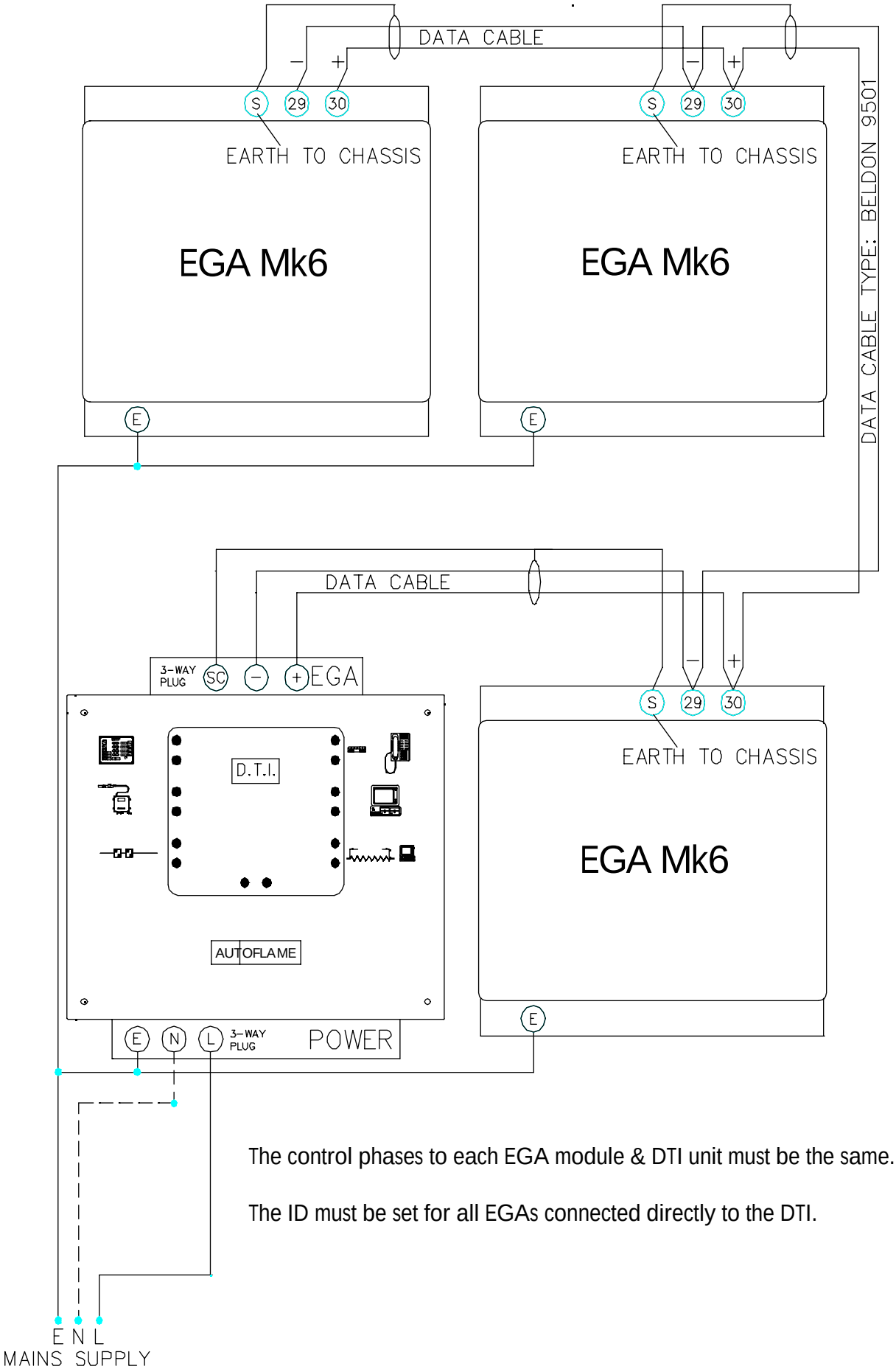

The control phases to each EGA module & DTI unit must be the same.

The ID must be set for all EGAs connected directly to the DTI.

3.7 Testing & Calibration

!!! WARNING !!!

As always observe health and safety procedures. An operator working on the EGA must be of proficient technical standard. Take care when removing the front cover of the analyser. If the Analyser is powered, the cooling fan will be in operation.

3.7.1 Approach to Testing & Calibrating an E.G.A. Mk.6

The information contained in this manual provides a comprehensive understanding and operation of the Mk.6 Exhaust Gas Analyser (E.G.A.) units. If using this manual for the first time please read all of it thoroughly before working on an E.G.A. unit.

The method test and calibration is based on the E.G.A. being connected to PC running the 'EGA PC Calibration Software'. (This is a standard product available from Autoflame pt No. DTI20018, comprising software supplied on a diskette and a lead that connects from a PC serial port to the EGA setup port. The lead is identified by red shrouds at each end).

For brevity, the various screens, information and actions that may be carried out on the PC are not covered in detail in this manual, only a brief overview is given. Operators can quickly familiarise themselves by working hands on through the various menus on a real system. Throughout the manual any examples of text that are displayed on the PC screen are shown in bold.

To install the software on the PC make a subdirectory on the hard drive, using the DOS copy command, simply copy all files from the diskette to the PC hard drive. To start the program type EGATOPC <return>. (The program runs in DOS only. A mouse is NOT supported). The first time the software is run select **SYSTEM** from the main menu. This is the setup of the PC configuration to work as monochrome/colour screen, printer port.... can be set. Once all items have been worked through the settings are stored immediately. The next time the program is run these settings will be restored automatically. If the system settings need modifying subsequently then select the **SYSTEM** menu and change the settings as desired.

At all times when the EGA is sampling, during day to day operation or testing, it must be kept upright otherwise condensate may find its way out of the chiller block, into the filter and beyond.

3.8 EGA Set-up Software Introduction

The following information is provided to enable the Autoflame E.G.A. System to be calibrated and serviced by the user.

The software is operating a context sensitive help system. This means that by pressing the F1 function key you will get a help message specific to the function selected in the program. If you are unable to find the HELP you require in the software notes go to the desired function in the program and press F1.

The E.G.A. calibration software is accessed using an IBM PC or compatible, running MSDos together with the software and data cable provided. The PC operates via the RS 232 serial port, either COM1 or COM2 and the corresponding serial port in the E.G.A. (see diagram 3.1.3) The serial port in the E.G.A. is a 9 pin 'D' type connector on the cell board. The dust cover on the D connector must be replaced after use.

To ensure the combustion readings are correct the E.G.A. should be either checked or calibrated once a year. Error codes and information displayed on the remote display Pod (used for Stand Alone Analyser) or the Micro Modulation unit (used for combustion trim) must be observed.

The E.G.A. will log faults and retain the types of fault stating the date the fault occurred. Up to 10 values will be logged with the oldest fault being discarded. The logged values may be displayed on the PC.

Once connected it is important to establish communication is correct. This is displayed on the PC screen, top left, with the message "EGA Communicating OK".

Should there be a communications problem please check the following points:

1) The data cable that is being used is the correct type as supplied with the software.
2) All interconnections are correct and secure.
3) The E.G.A. is powered and operational.
4) The correct serial port is selected from the software, (COM1 or COM2)

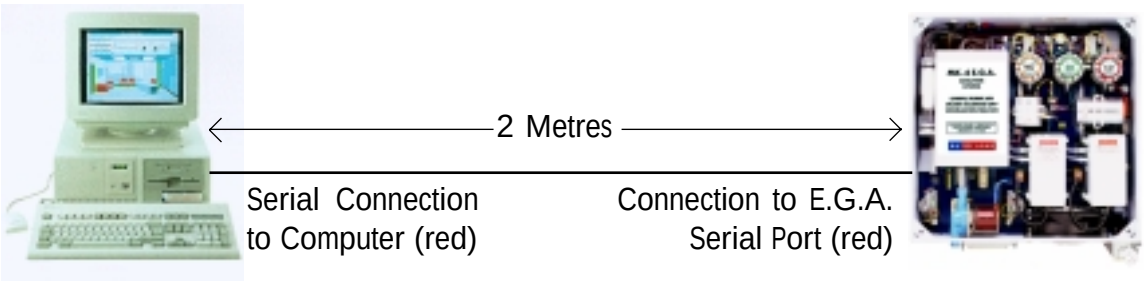

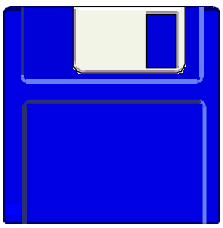

Cable & Disk Part No. DTI20018

3.5" Floppy Disk (EGADISK)

3.8.1 Software Possiblities

The E.G.A. 6 channel output facility is PC configurable to enable the user to set the range and items of data required and also user selectable. Via the same software and connection lead (part no. DTI 20018) the E.G.A. can be configured and operated as required, this can also be used to service, fault find and calibrate the unit in two ways:-

Replacement sensors are supplied pre-coded which is entered into the EPROM of the unit to calibrate the cell.

Selecting the output signals of the 4-20mA
There are eleven possibilities:-

1. O_2 range adjustable
2. CO_2 range adjustable
3. CO range adjustable
4. NO range adjustable
5. SO_2 range adjustable.
6. Exhaust gas temperature
7. Efficiency/nett/gross
8. Input for ambient air temperature i.e.; combustion air inlet on burner
9. Air temperature input 4-20mA
10. E.G.A. unit air temperature ambient
11. Smoke density auxiliary input/output 0-10v from smoke obscuration 4 to 20 mA output.

3.9 Using The Software

Calibrate Sensor (Replacing a Sensor)

The use of this facility will enable the user to calibrate the sensors within the E.G.A.. Each sensor is supplied by Autoflame complete with it's own unique calibration code number.

step 1. Removing the sensor to be replaced,

a) For O_2 and CO_2 sensors disconnect the corresponding plug associated with the sensor and the two plastic tubes, now remove the sensor retaining strap and install the new sensor following the steps in reverse order.

b) For CO, SO_2 and NO sensors, disconnect the corresponding plug associated with the sensor, now remove the three screws located on the top of the sensor, only replace the sensor head. Do not remove the plastic tubing from the sensor housing.

step 2. Select Calibrate Sensor from the tool bar displayed at the bottom of the screen page. This command will allow you to change a sensor without the need for test calibration gas.

step 3. After selection of the desired type of sensor from the menu listing, press the Enter key.

step 4. Type in the calibration code at the prompt and type Enter.

step 5. The E.G.A. communications will update the P.C. with information regarding the types of sensor fitted, i.e. CO, NO, SO_2 , CO_2 and O_2 .

step 6. Changing of the Sensor is now complete, remove serial connection and replace cover on the E.G.A. unit. If the cover is left off the E.G.A. the internal components may over heat due to lack of cooling air from the fan located on the base of the unit. If the internal temperature is above +40 deg C or below +5 deg C the Pod or M.M. unit will display "EGA HI" or "COOL" respectively.

NOTE* Only sensors purchased as spares have a code number issued.

3.9.2 Status

When the status toolbar option is selected the P.C. will display all the information from the E.G.A. unit. The information will only be received provided the E.G.A. is communicating with the P.C. Ensure the E.G.A. is powered.

The Status screen will display the following information typically:

EGA Identification Number:	1	
Operating Mode:	EGA with MM	
Operating Status:	Ready for operation	
Monitoring:	Oxygen	O_2
	Carbon Dioxide	CO_2
	Carbon Monoxide 1	CO
	Nitrous Oxide	NO
	Sulphur Dioxide	SO_2
Run Time (Fuel 1)	433 Hours	
Run Time (Fuel 2)	120 Hours	
Run Time (Fuel 3)	10 Hours	

Note: The above information is an example of Status information available

3.9.3 Faults

The Faults screen page shows the listing of all fault conditions that have occurred on either the M.M. unit or the Stand alone display Pod. Up to 10 faults can be stored and displayed after this, subsequent faults will erase the oldest fault listed. The date the error was detected and the Error number will also be listed.

Example:

1	:	12/09/96	O_2 cell failed	(21) Error number
2	:	04/10/96	Pump failed	(20) Error number

3.9.3 Options

This facility allows the user to select those options for the desired operation of the software. The user can configure the various options by pressing the Enter key when set to the required menu. Once Options has been selected the Configuration Menu will be displayed, showing the following menu options.

3.9.3.1 4 - 20mA Outputs

As standard the Mk.6 E.G.A. unit is supplied with 6 channels of 4 - 20mA. The user can programme the required output from the function menu and configuring to the desired range. The minimum output is 4mA the maximum output is 20mA, each can be set to the range required.

Standard Factory Setup			
CH No.	Selection	Min	Max
CH1	O_2	0	20.9
CH2	CO_2	0	15
CH3	CO	0	999
CH4	NO	0	999
CH5	Deg C	0	400
CH6	Eff %	0	100

An external PSU is not required for the analogue outputs. The maximum permissable load on each analogue output is 250Ω. All the negative terminals are common to each other. The analogue outputs as a whole are isolated.

3.9.3.2 EGA Operating Mode

The EGA Mode Setup allows the user to select the type of sensors and the desired operation on the analyser. The menus for each option show the selection available at each point. Use the Enter key to move to the next value, use 'Y' to denote selection of the NO and SO_2 sensors, or 'N' if not in use. When selections are complete press Enter.
If you select this option but decide not to change any values press the Escape key.

Setup configurations available:

Identification Number
CO Sensor type
Stand Alone or MM operation
Efficiency Calculation
NO_2 Sensor fitted
SO Sensor fitted

3.9.3.3 Pinch Valve Control

This facility allows the user to measure CO and NO when operating on F2 or F3 fuel programmes. As standard, CO and NO will only be measured when operating on fuel programme F1 programme should always be used for the operating of gas firing. This facility may be required if gas is operating on F2 programme or the user would like to measure CO and NO when burning fuel oil.

V1 = Pinch valve No.1 .(Brown) This pinch valve is located at the top of the cell P.C.B. .Second from the left, with a brown top to the valve.
V2 = Pinch valve No.2: SO_2 Pinch valve

To check the pinch valves operate correctly:

The Pinch valves are checked in the M.M. Run mode. Select fuel 1 (F1), Press E.G.A. to display the E.G.A. information. Check that pinch valve 1 is open. The black topped pinch valve should close when an E.G.A. calibration takes place, at this stage the sample line is closed and the drain solenoid is opened. At all other times (i.e. when no calibration is taking place) the black topped valve should be open.

Select fuel 2. Check pinch valve 1 is closed all the time Fuel 2 is selected. Unless this has been changed by the user as described earlier in Pinch Valve Control.

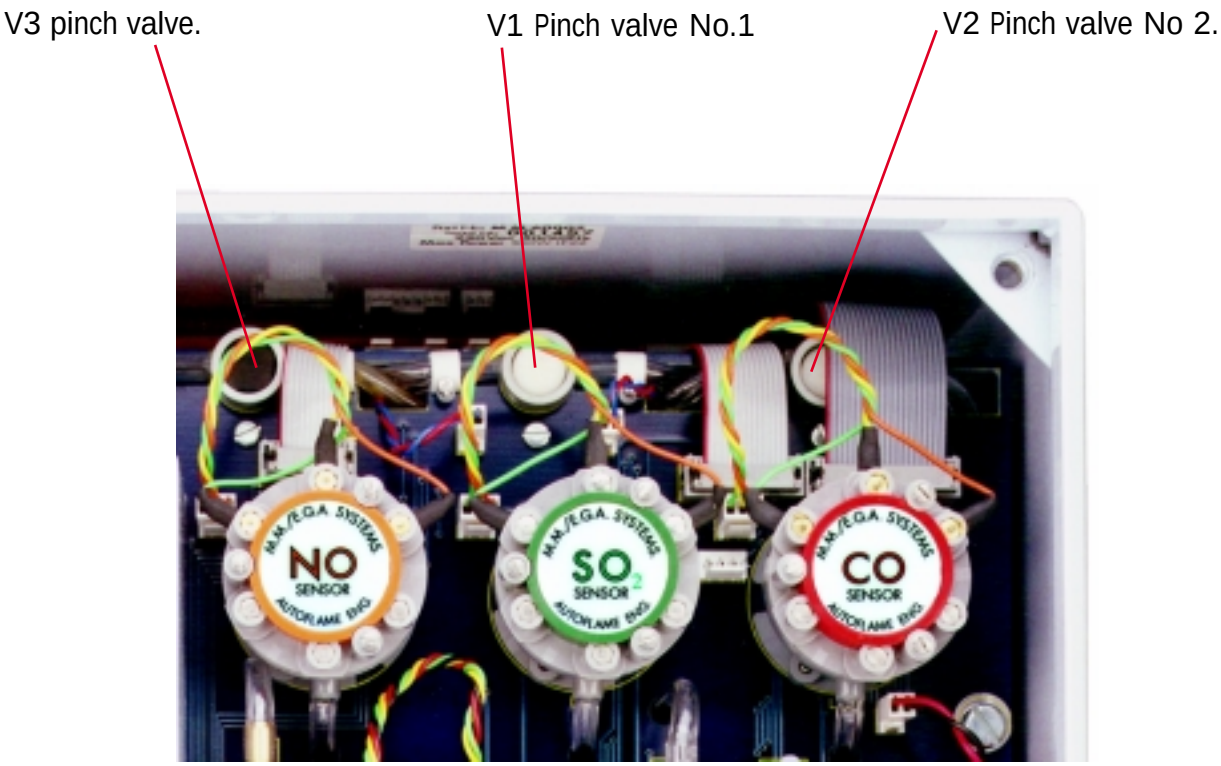

3.9.3.4 System Configuration.

This function allows the user to select the following:

Language:	English, German or French.
Serial Port:	1 or 2
Monitor:	Colour: Yes or No
Printer Port:	PRN as standard
Baud Rate:	9600 as standard

3.9.3.5 Test and Calibration Menu.

Options available:

a. Enter report details
b. Set time and date
c. Clear fault records
d. Print report
e. Modify Distributor details
f. Load fault record to disk
g. Sensor calibration dates
h. Return to main menu

3.9.3.6 Return to Main Menu (press ESC key)

3.9.3.7 Quit.

This will return the user to the DOS prompt.

3.10 Limits on Three Measured Combustion Parameters O_2 ,CO, CO_2

3.10.1 Overview of System Operation: Features and Benefits.

The limits control software, which is included in every M.M. E.G.A. module, further extends the application and control possibilities of the system when the E.G.A. sampling system is fitted. The function of the Limits control software enables the end user or commissioning engineer to insert upper and lower limits on either or all of the three combustion parameters that the E.G.A. system measures; O_2, CO_2, CO. To invoke this additional control facility, follow the commissioning data and technical information sheet within this section.

The Limits control software is configured in two distinct forms: "Standard" Limits or "Absolute" Limits. Either configuration is a user variable selection via the Options listing detailed and listed elsewhere in this publication.

"Standard" Limits:

"Standard" Limits are a set percentage volume above or below the commissioned value for O_2 and CO_2. In the case of CO, it is a specific amount of p.p.m. (parts per million) above the commissioned value. These values are entered when commissioning of the E.G.A. system has been completed throughout the load index of the burner.

"Absolute" Limits:

"Absolute" Limits are a specific percentage volume (numerical value). In this form only an ultimate low value may be put on O_2 in percentage volume and an ultimate high value for CO_2 in percentage volume: In the case of CO, an ultimate high value in p.p.m. may be entered. These values are entered when commissioning of the E.G.A. system has been completed throughout the load index of the burner.

The values for either "Absolute" or "Standard" Limits are implemented via the Micro Modulation Controller options. When an entered Limit is exceeded, either in "Absolute" or "Standard" configuration, the following alternative control functions are available to the user: (Selected via Options).

Control Function 1.

The Trim function is turned off automatically and the system runs on M.M. fuel and air positions only. Also an Error value is displayed (See ERRor listings). The error value displayed can be cleared and the Trim function reinstated by pressing the "Open" and "Close" buttons on the switch facia simultaneously.

Control Function 2.

The combustion system is shut down (the CR relays are opened). Also an error value is displayed (See Error listings). The error value displayed can be cleared and the combustion system restarted by pressing the "Open" and "Close" buttons on the switch facia simultaneously.

(See relevant data sheets and drawings showing the control forms and facilities detailed above).

3.10.2

EXAMPLE OF LIMITS ON
O2 MEASUREMENT

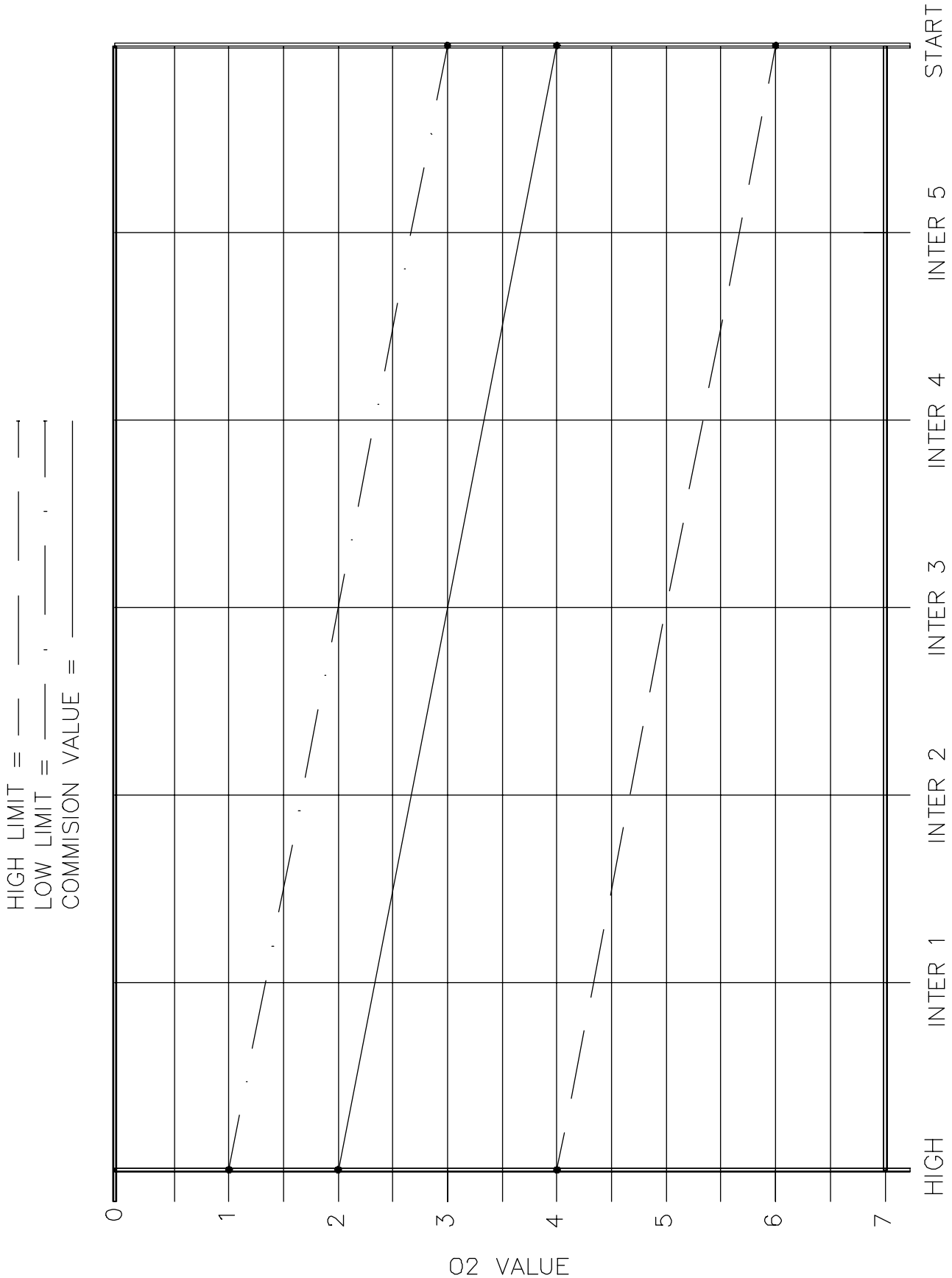

3.10.3

EXAMPLE OF LIMITS ON
CO2 MEASUREMENT

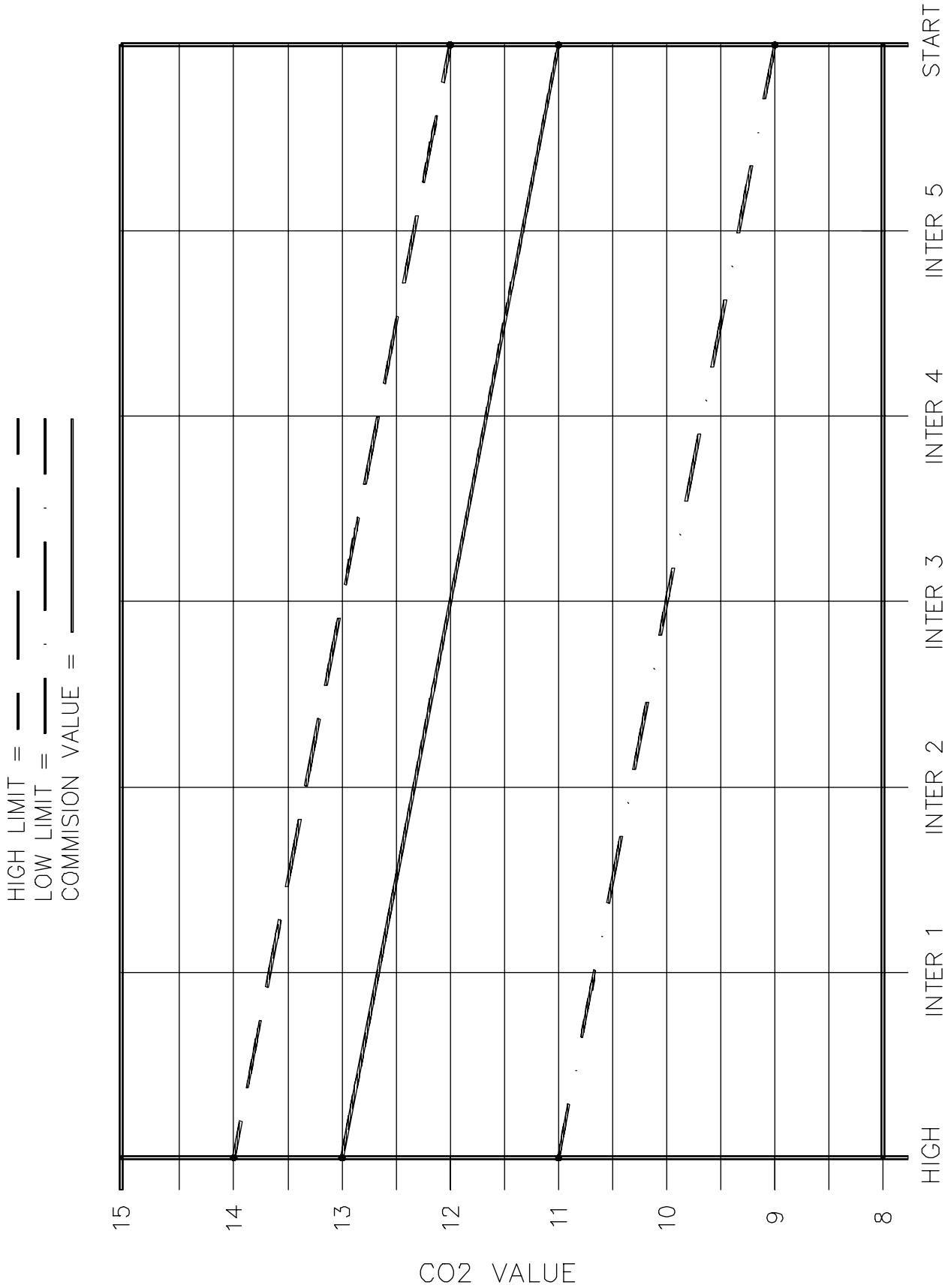

3.10.4

EXAMPLE OF LIMITS ON
CO MEASUREMENT

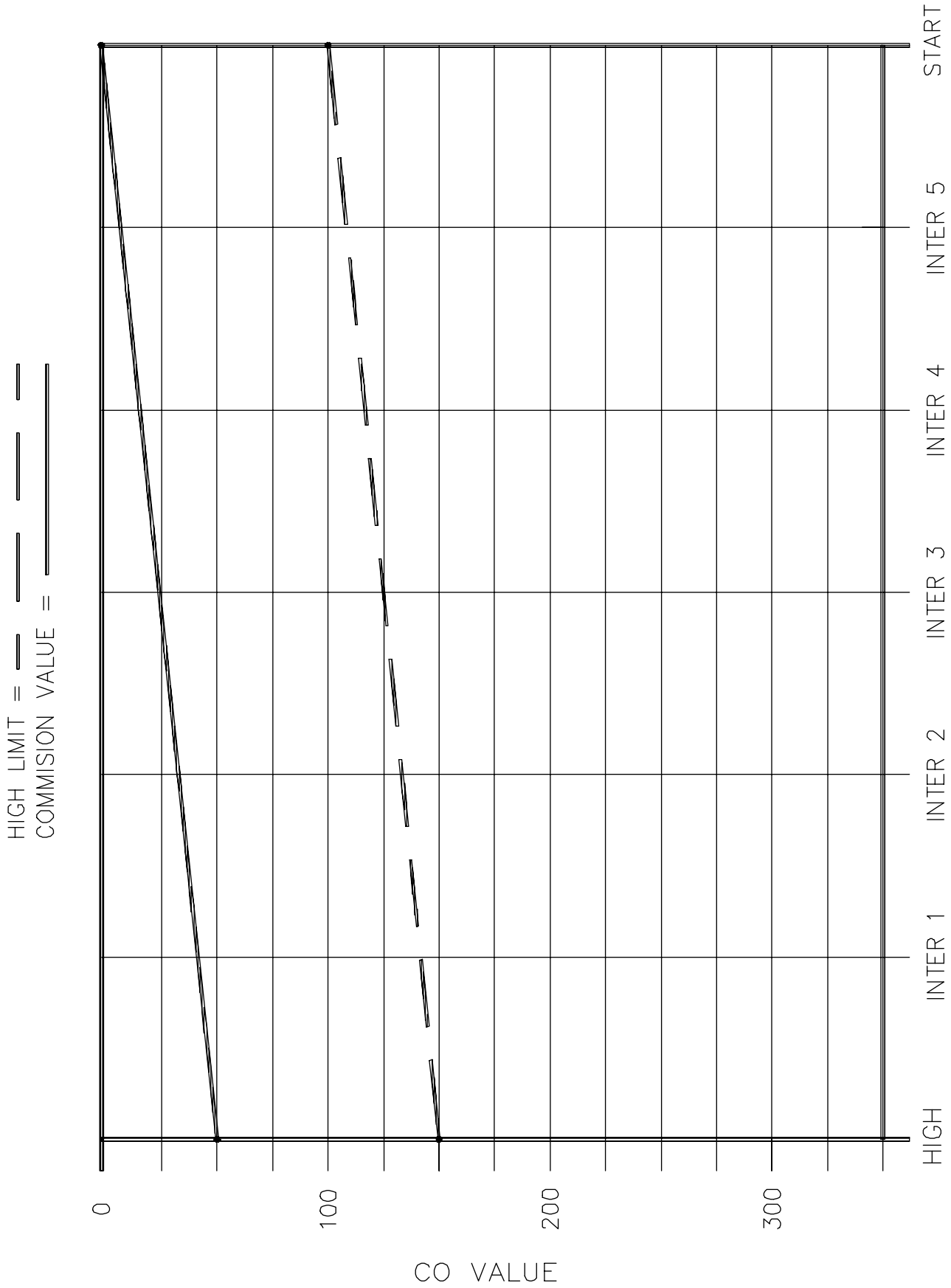

3.11 EGA Dimensions

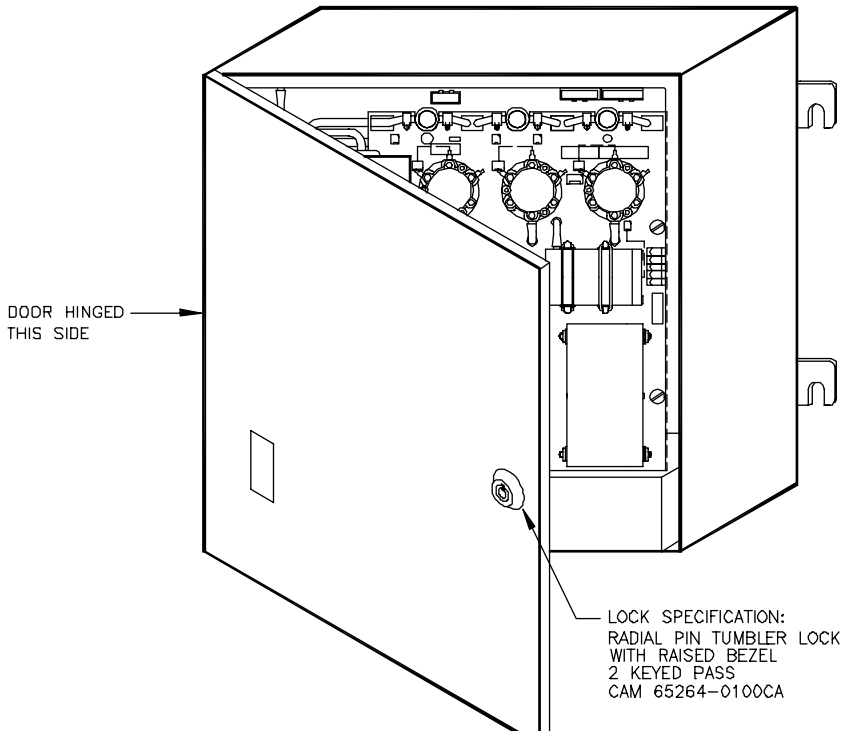

NOTE:
DEPTH OF PANEL WITH FIXING BRACKETS = 181mm (7.125")

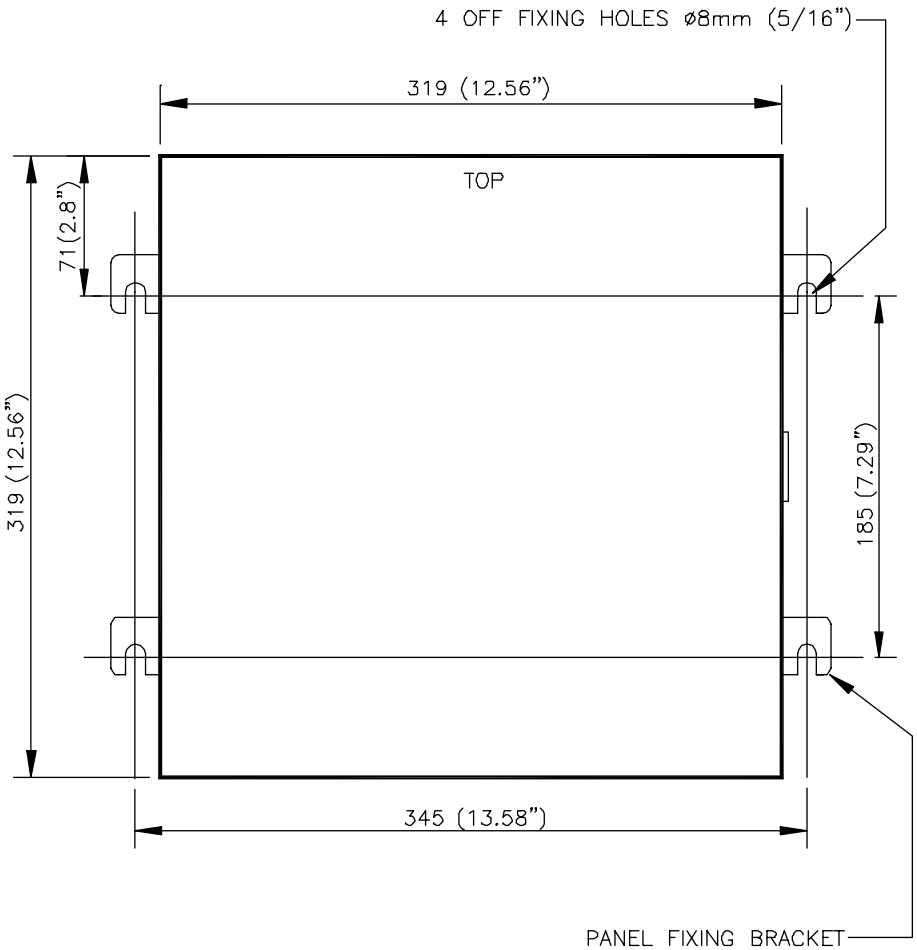

If EGA is in a hot area, cool air should be directed from a lower level or from outside with a filter.

3.12 Standard EGA Sampling Probe

3.12.1 Installation and Maintenance

E.G.A. Sampling Probe Installation.

Mount the sampling probe at an angle of approximately 45 degrees.

Install a 1.5" B.S.P. socket on the flue or other point that sampling probe is to be positioned.

Mount the main body of the probe as far in as possible; adjustment is made by loosening the grub screws in the flats of the 1.5" B.S.P. bush supplied on the probe.

Keep the thermocouple cable and sample tube away from hot surfaces.

NOTE*
For correct EGA operation, the probe must be positioned without air leaks as this will give incorrect readings on all sensors.

E.G.A. Sampling System Unit Installation

Push the sample tube onto the inlet tube. Plug the thermocouple connector into the socket and tighten the screw.

To obtain optimum performance and reliability do not mount the unit in ambient temperatures above 45 degrees C. or areas of direct heat radiation. Ensure that the air flow to the intake in the bottom of the E.G.A. unit is not impeded and the air temperature is less than 45 degrees C.

Do not mount the units where excessive vibration occurs (floor standing racks are available from Autoflame Eng.).

Position the sample tube so that the sample slopes down to the EGA unit at all times.
The E.G.A. unit must always be mounted lower than the EGA probe.

Diagram to Show Correct Mounting/Fixing Position.

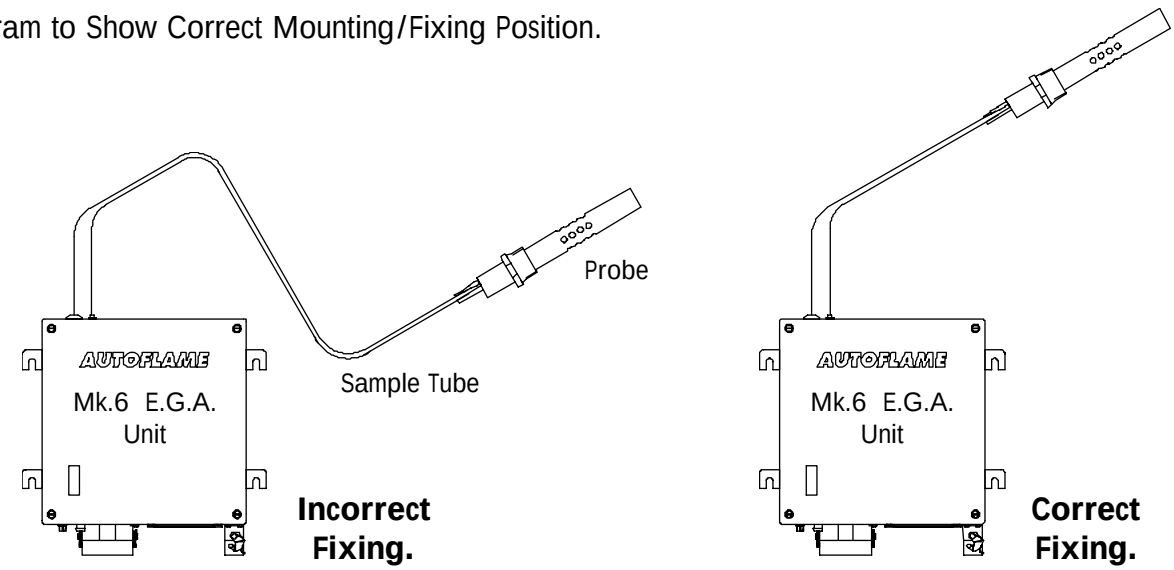

3.12.2

E.G.A. SAMPLING PROBE ASSEMBLY

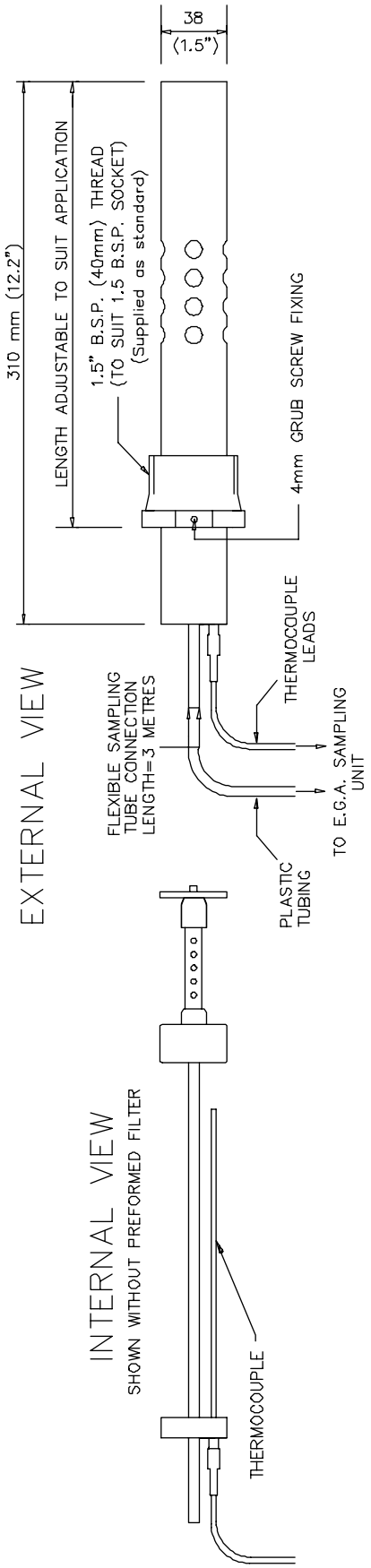

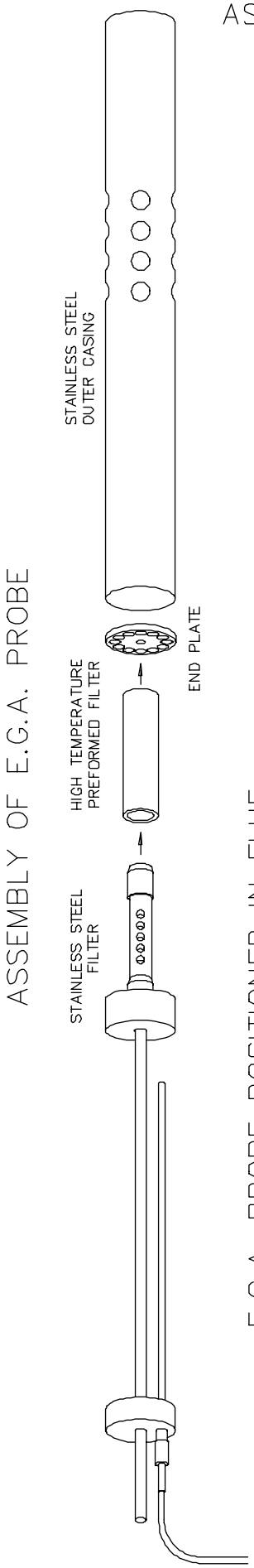

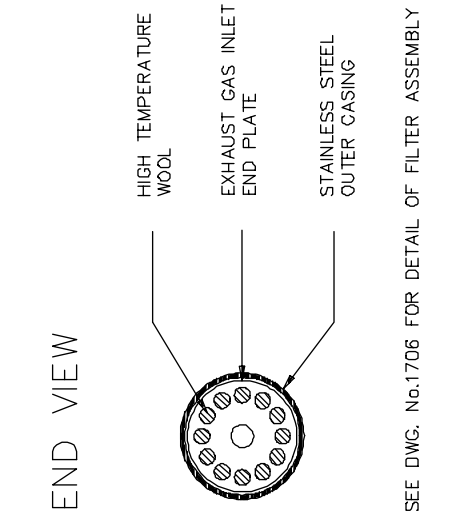

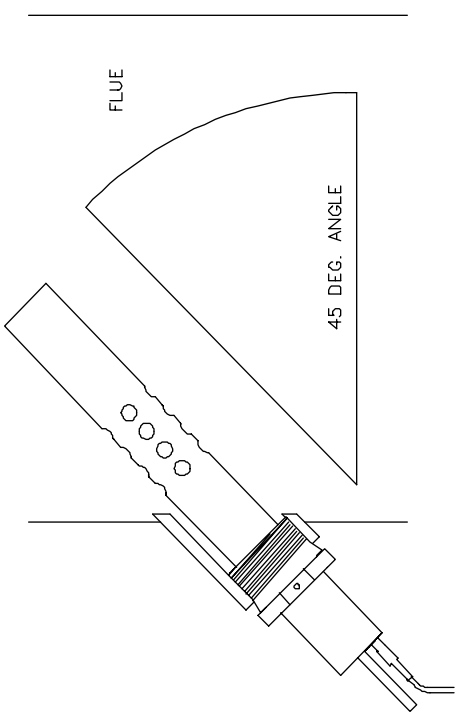

3.12.3

END VIEW

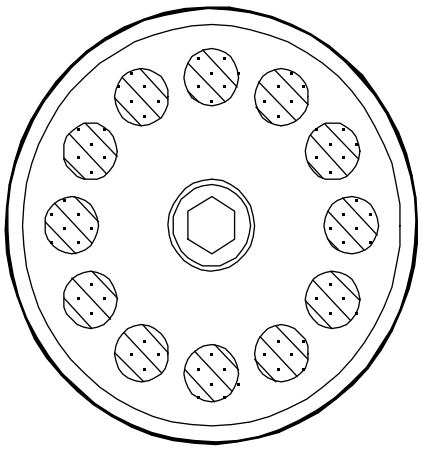

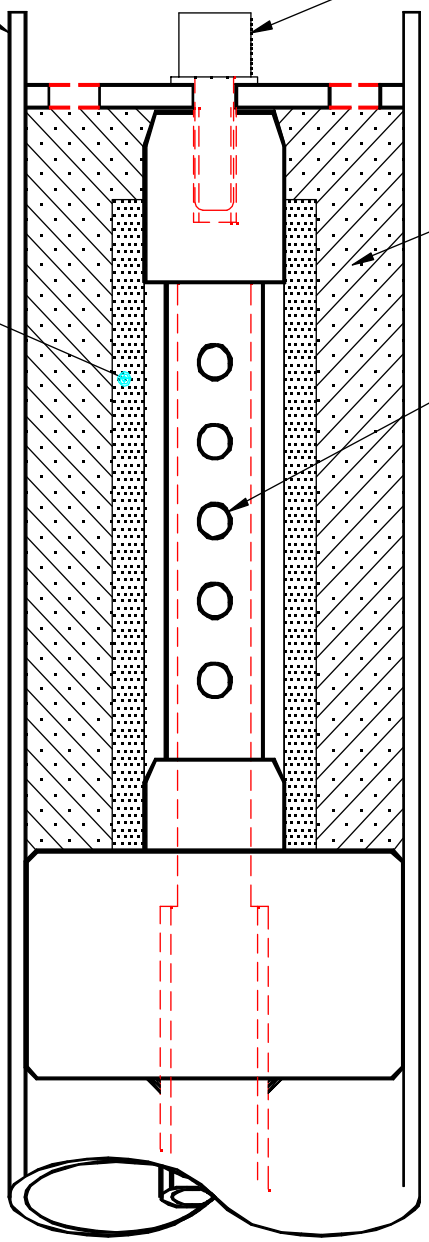

CROSS SECTIONAL VIEW

ALL PARTS MANUFACTURED
FROM STAINLESS STEEL

3.12.4 Maintainance of Sampling Probe

On gas only applications it is unlikely that there should be any maintenance on the stack mounting probe. On heavy or solid fuel applications, deposits may build up in the outlet part of the tube. If the tube blocks “ERR EGA 20” will be displayed on the M.M. unit (See Section 3.3.1).

The deposits can be cleared by running a long drill (7mm)(.275") up into the outlet tube by hand. Twist and withdraw the drill often so as to pull out the deposits, otherwise the deposits will be pushed further into the probe assembly.

Sectional Diagram to Show Method of Clearing a Blocked Outlet Tube.

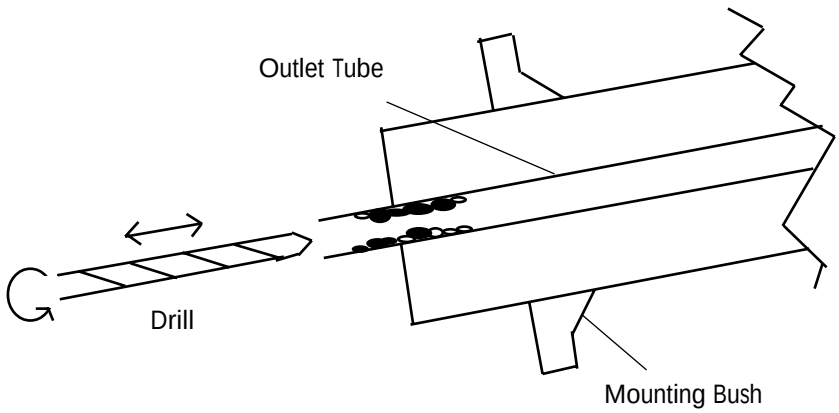

3.12.5 Installation Precautions

The reliability of the equipment may be impaired if used in environments where strong electro magnetic fields exist. If for example the equipment is installed in a boiler house at the top of a high rise building where radio systems exist then additional EMC (Electro Magnetic Compatability) measures may have to be considered

3.12.6 Servicing E.G.A. Sampling Probe.

If the filter assembly in the E.G.A. sampling probe is blocked then it is necessary to disassemble the probe and fit a new pre-formed fine filter and coarse filter material. To check if the E.G.A. probe is blocked connect it to the E.G.A. If the flow drops by more than 100 cc/min. then the filtering materials must be replaced.

To disassemble the probe, remove the two cap headed screws visible on the outside of the assembly (one each end). The whole of the internal assembly can now be withdrawn from the sample connection end. Remove all traces of the filtering materials from the stainless steel filter. Check that the ways in the stainless steel filter are clear and also the inner sample tube. Very carefully (the pre-formed fine filter is delicate) push the pre-formed filter onto the stainless steel filter.
Slide the inner assembly back into the stainless steel outer casing. Pack the void between the fine filter and the outer casing with coarse filtering material as shown on the Filter Assembly Diagram. Use a small rod to pack the material down a little at a time. Reassemble the Exhaust Gas Inlet End Plate and the two screws.

After reassembly connect the probe to the E.G.A. and check that the drop in flow is no more than 50 cc/min.

Plug in the thermocouple lead and set the M.M. to read E.G.A. Values in Commissioning Mode. Apply heat to the thermocouple (put a soldering iron through the holes in the outer casing) and check that the thermocouple gives a reading.
If there is any doubt to the accuracy of the thermocouple then replacement is advised.

Mk.6 EGA Internal Tubing Pipework

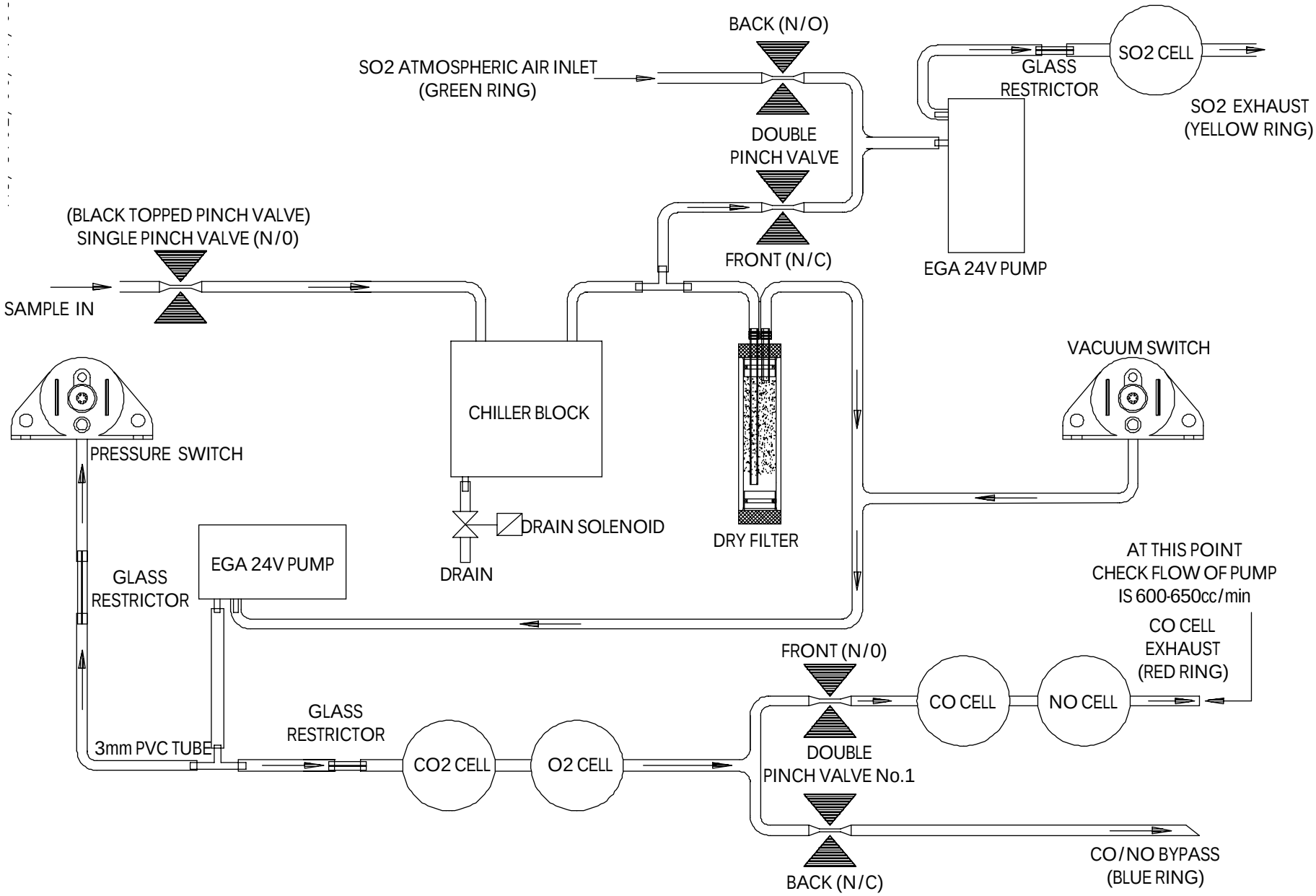

Section 3.14 E.G.A. with Bubble Filter

3.14.1 Overview

The Exhaust Gas Analyser in its standard form is a tried tested and approved apparatus for the continuous on-line monitoring of exhaust gases on packaged boiler plant.

The versatility of the product enables monitoring of all types of commercially available fuels on both packaged light, commercial & industrial process plant.

For Clinical waste incineration there are 3 parameters of importance to the environmental authorities:- O_2 , CO, & Exhaust gas temperature.

The use of electro chemical cells enables a cost effective package offering the accuracy required for clinical waste monitoring.

The "Bubble Pot" continuous wash filter ensures all acids & metals are absorbed from the sample before entering the EGA unit, preventing a corrosive attack of the system.

Data from the unit is available in two forms:-

1. Remote Display Pod
2. 6 x 4-20mA outputs for connection to PLC

The unit carries out nightly "Autocal" checks to ensure the cells are operating within specified tolerances. Any discrepancies are signalled on the display pod facia using the error codes detailed in section 5

A PC software package & lead are available which allow a service technician to carry out simple setup & calibration tasks. Replacement cells are supplied with their own unique calibration no.
When a cell is replaced the calibration number is entered via the PC ensuring minimum downtime and costly on site service charge. *(Part No. DTI120018)*

3.14.2 Operation

The E.G.A. & filters are designed to operate with the minimum amount of user input.

The unit is supplied prewired & prepiped ensuring simple installation.

Section A1 shows a typical layout for the unit with all connection information detailed separately under their respective figure illustrations.

Day to day Operation.

Once installed all necessary inputs & outputs are automatic.

The unit must always be powered.

A mains 230Vac input on terminal 7 tells the unit when to start sampling. This signal should come from the PLC & should be set to give an output when the furnace temperature has reached 1000 deg C.

NB. Experience shows that when the furnace is below 1000 deg C considerable amounts of unburnt ash/solids are given off which quickly block the sampling system. It is not advisable to control the process until the combustion has reached a steady state condition.

Setting up Water Flow.

Water input must be greater than water out through the drain,.
The greater the water flow, the more acids are absorbed from the sample.
Ideally water "in" should = water "out", however on initial start-up the filter would not be able to fill,
therefore the water "in" should be slightly greater than the water "out". If the difference is too great the water "in" solenoid will be constantly be turning on & off creating a pulsed sample, a control regulating valve on the inlet water line will enable optimum setup.

3.14.3 Maintenance

The on/off signal for sampling is controlled by the PLC.

Daily Checks

1. Check the condition of the hot filter on the end of the probe.
   experience shows that this needs replacing every 2 to 3 days depending on waste being burnt. *(see section A1)*

2. Check there is a gentle flow of water from the bottom of the Bubble Filter.

The unit has self diagnostic error checking software & any fault conditions are notified via error codes on the facia. *(see fault finding Section 3.14.5)*

Monthly Checks

4. Remove EGA lid and visually check the condition of the E.G.A. "Dry" filter, *(see section 3.14.12)* the condition of this filter varies greatly with the type of waste being burnt. All the following conditions necessitate change:-

   a) Discoloration of the wool filter.
   b) Build up of white deposit in the filter.
   c) Any signs of condensate.

3.14.4 Standard Setup

The EGA is setup to work with a display pod & Bubble Pot. If any item is not connected an error condition will be signalled.

4-20mA Output Setup

CHANNEL	DESCRIPTION	4mA	20mA
1	O2%	0	16
2	-	-	-
3	CO ppm	0	200
4	Type "K" Thermocouple	500	1600
5	Type "S" Thermocouple	500	1600
6	Fault - -operational	Fault	Operational

The above are factory set. These can be changed at time of manufacture or by the user with the aid of the EGATOPC software disk & lead.

3.14.5 Fault Finding

The EGA system is running self diagnostic error checking software. Should a fault condition arise the unit will shut down in a safe manner, notifying the operator via the channel 6 output to the PLC & with a detailed code on the pod facia.

The pod facia displays the error code as follows:-

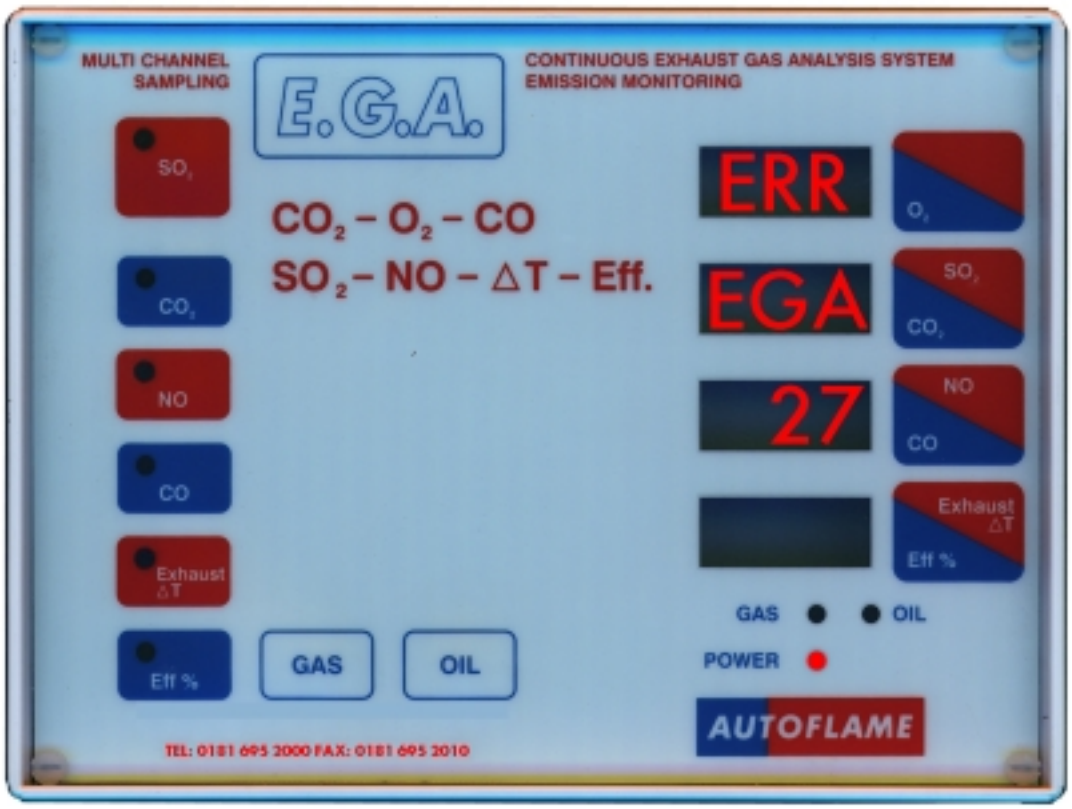

ERROR NUMBER	DESCRIPTION
01	No Communication With Pod
20	Pump Failure/Sampling Blockage
21	02 Cell Failure
23	CO Cell Failure
24	Flow Pressure Switch Failure
26	NO Cell Failure
27	Water Has Filled But Will Not Drain
28	Bubble pot Wiring Fault
29	Flood Condition

Possible Problems

01 ——— Check Wiring connection between EGA & Pod. *(see section A4)*

20 ——— Pump failure/Sampling Blockage, remove sample tube at inlet to EGA
If error goes then the sampling line/Bubble Pot has a blockage.
Isolate each section & check for blockage.

If error persists then blockage/Fault is within the EGA.

Remove the input to pump (lower pipe connection)
If error persists then faulty pump.
If input clears then the pump is O.K.
check the following:-
a) Filter
b) Visually check sampling line.
If unable to find problem then contact your distributor. *(see section A5)*

21 ——— Replace O_2 cell.

23 ——— Replace CO cell.

24 ——— Change pressure switch.

26 ——— Replace NO Cell.

27 ——— Water has filled but will not drain.
Possible Problems:-
a) Drain cock is blocked.
b) Blockage in Sampling probe.

28 ——— Bubble Pot wiring fault.
Check the connector for the Bubble Pot is securely fixed.
Check wiring.

29 ——— Flood condition - Water has reached the high level water probe.
Possible Problems:-
a) Sampling probe/Line Blocked.
b) Small restriction in drain cock.

N.B. For both 26 & 27 if the sampling probe is significantly blocked, atmospheric air will enter through the drain hole.

Other Possible Problems

Fuse keeps blowing.

If the EGA is mounted in an excessively dusty environment a build up of particles on the terminals can cause arcing. If the particles are corrosive then any attack to the conformal coating on the printed circuit boards can cause tracks to arc & component failure. Any sign of this activity & the unit should be returned to the supplier.

Continuous O_2 Reading at 20.9%

Check all piping is airtight
Check sample tube is not blocked.
Check air solenoid is closed.
Check air is not being drawn from the Bubble Pot drain.
Check Bubble Pot head for cracks.

!!Warning!!

The Bubble Pot head is made of a corrosive resistant medical grade plastic, the top is drilled & tapped to accept the small tapered pipe fittings,the Bubble Pot is working at a minimal pressure of 10" WG. Fittings need only be finger tight, overtightening these tapered fittings will build up mechanical stress in the plastic resulting in hairline cracking.

Water level

If the water level continually oscillates no sampling takes place, depending on the type of water being used, electrolysis can cause a build up of non conducting solids on the water level probes. This is simply cured by cleaning the probes *(see Section A5.4 for assembly of Bubble Pot)*

High displayed on Pod Facia.

The ambient is in excess of 40 deg C and the chiller cannot cool down.

Low displayed on Pod Facia.

The ambient temp is less than 5 deg C

3.14.6 Technical Specifications

Electrical Supply:-	230V/50Hz or 110V/60Hz (Selectable)
Pump Flow:-	0.5L @ 60" W.G.
Water Supply:-	This should be a constant head of between 10' & 15' of clean water from the header tank, **DO NOT CONNECT DIRECTLY TO THE MAINS SUPPLY**
Temperature Range:-	
	Min. +10 deg C Max. +40 deg C
Ceramic sampling Probe	0 - 1600 deg C
Type "S" Thermocouple	0 - 1600 deg C
Type "K" Thermocouple	0 - 400 deg C

3.14.7 General Assembly of Bubble Filter & EGA/EGA Display Pod

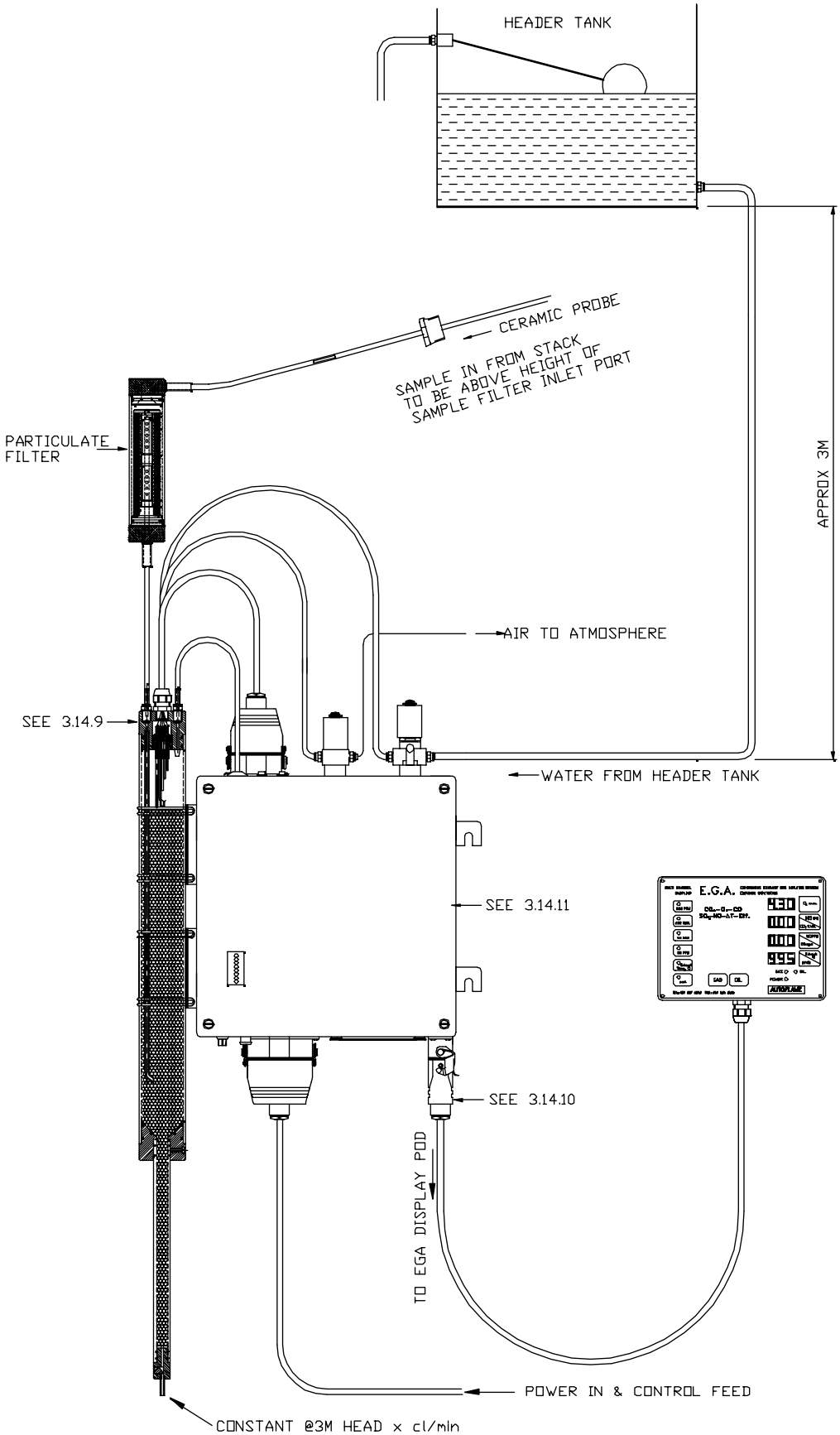

01:06:98/3572/JCF

3.14.8a Plan View of Connections (Actual)

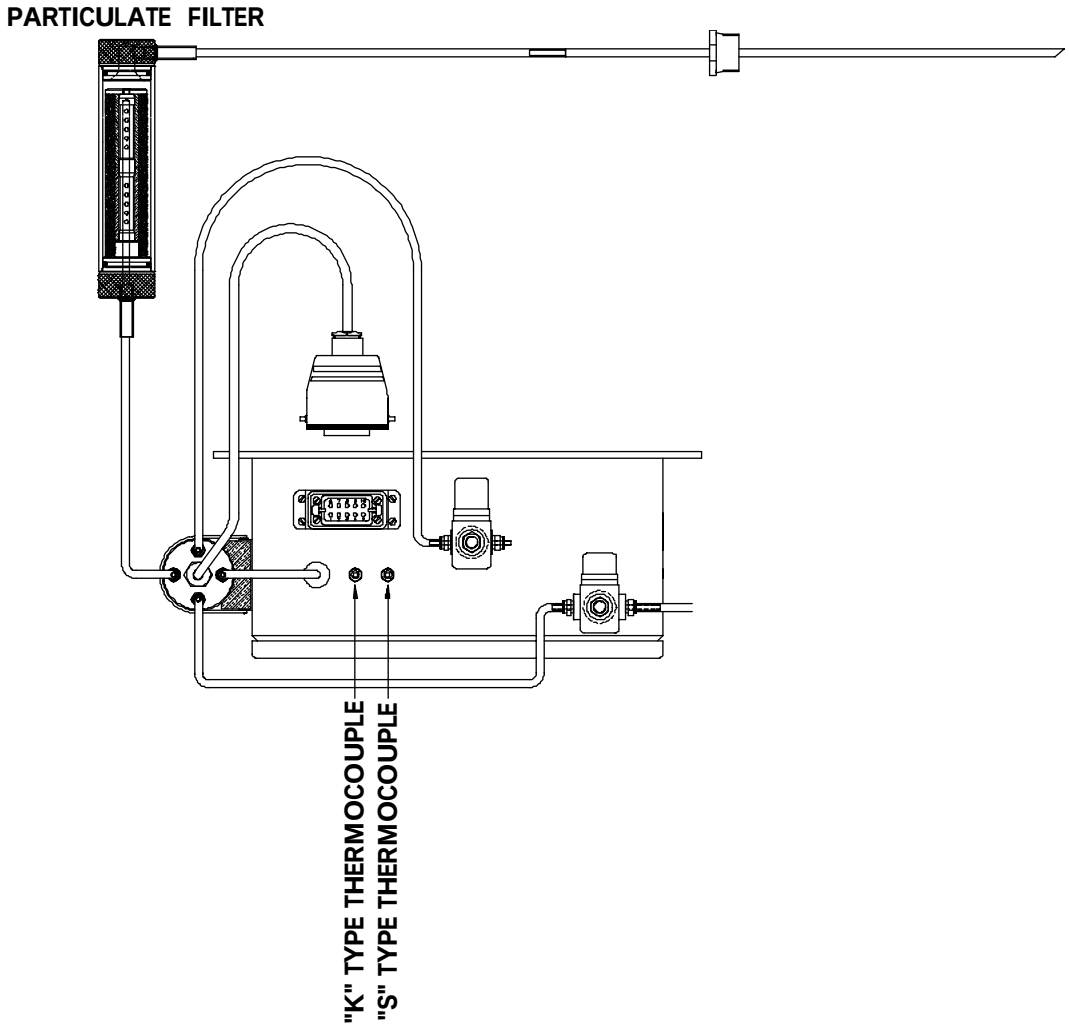

3.14.8b Plan View of Connections (Schematic)

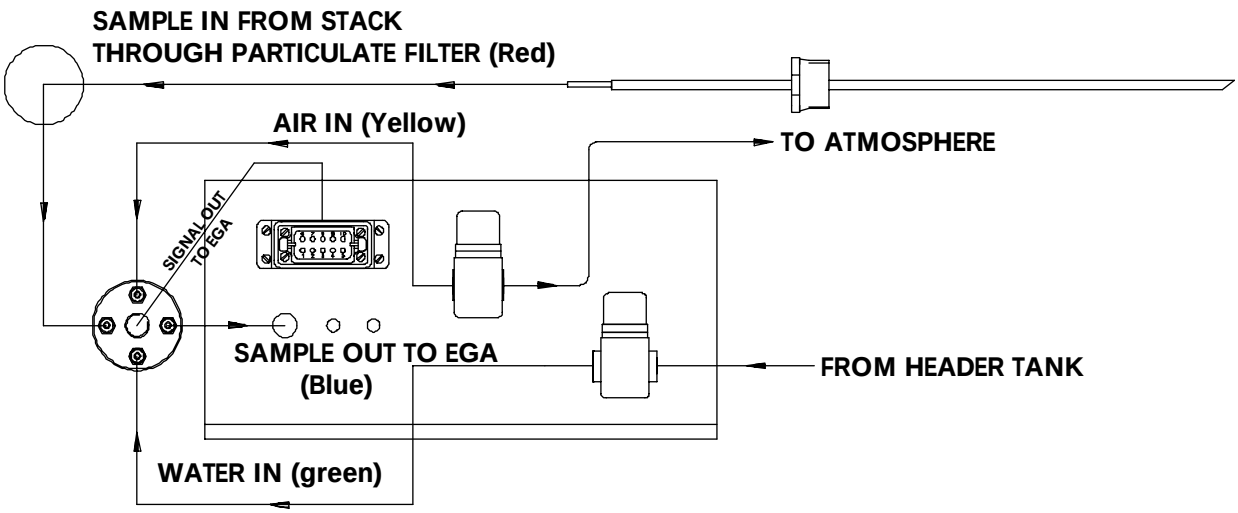

3.14.9 Enlarged View of Bubble Filter Top Cap Connections

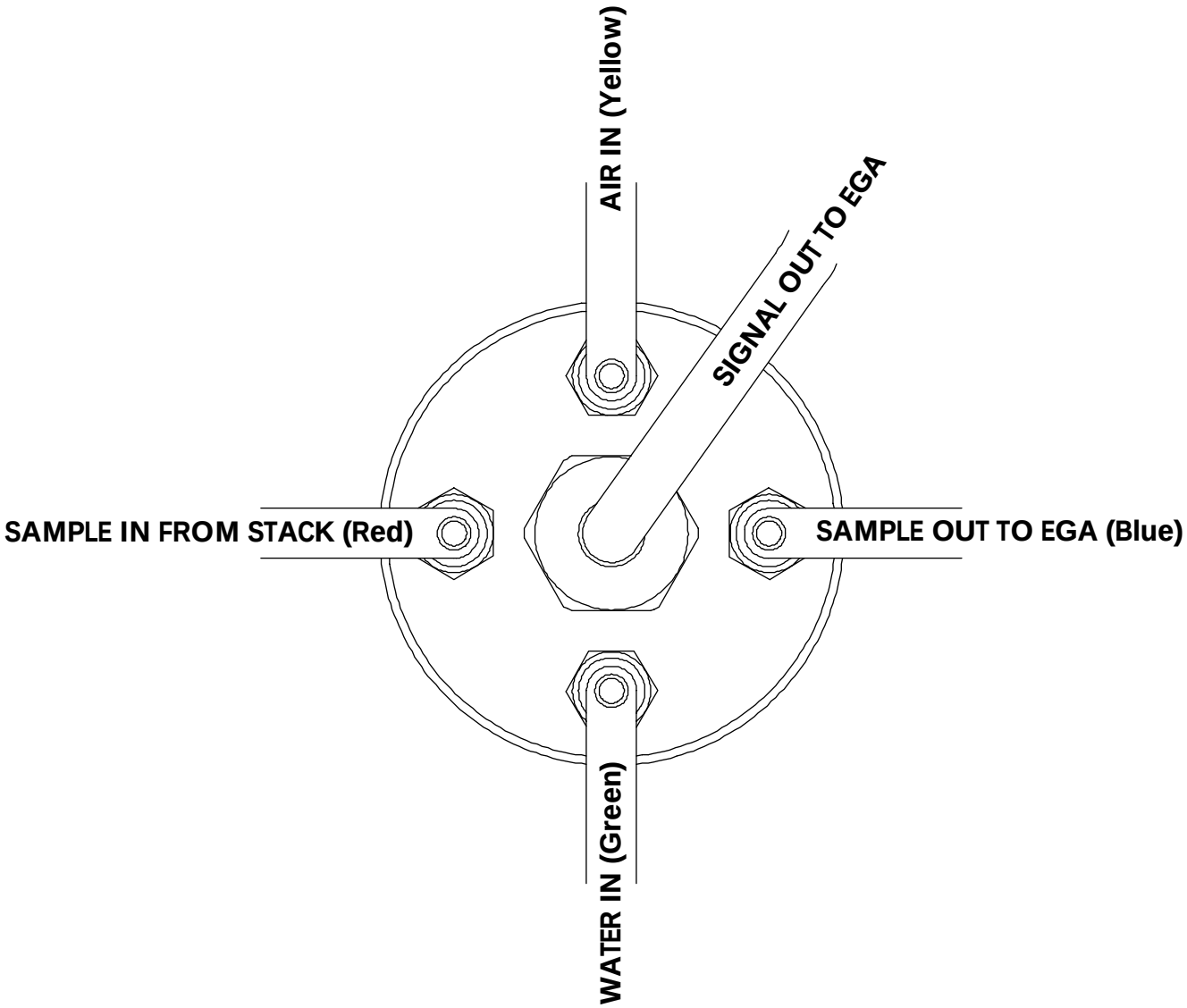

3.14.10

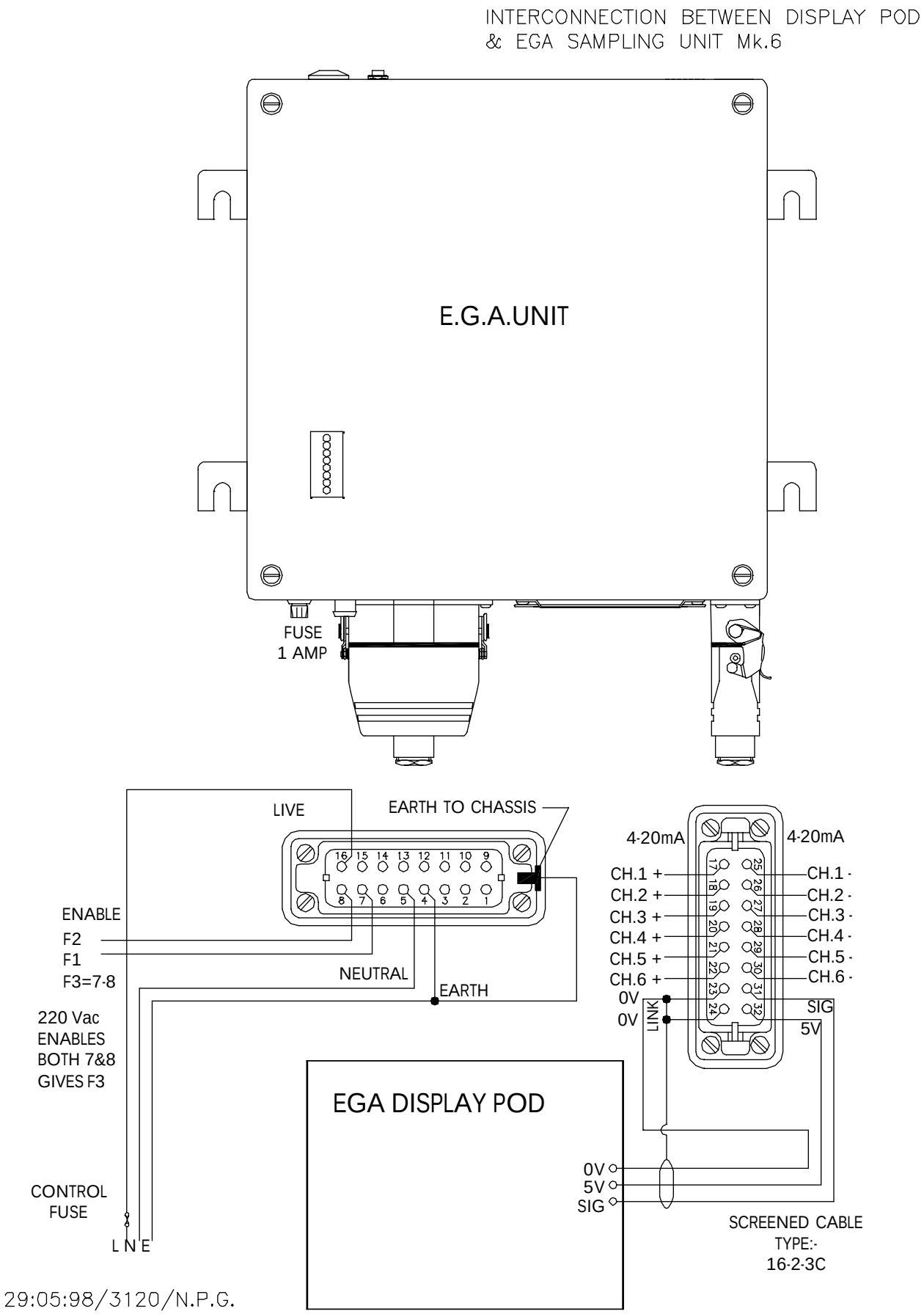
INTERCONNECTION BETWEEN DISPLAY POD
& EGA SAMPLING UNIT Mk.6
E.G.A.UNIT
FUSE
1 AMP
LIVE
EARTH TO CHASSIS
16 15 14 13 12 11 10 9
8 7 6 5 4 3 2 1
ENABLE
F2
F1
F3=7·8
NEUTRAL
EARTH
220 Vac
ENABLES
BOTH 7&8
GIVES F3
CONTROL
FUSE
L N E
4·20mA
4·20mA
CH.1 +
CH.2 +
CH.3 +
CH.4 +
CH.5 +
CH.6 +
0V
0V
LINK
CH.1 -
CH.2 -
CH.3 -
CH.4 -
CH.5 -
CH.6 -
SIG
5V
EGA DISPLAY POD
0V
5V
SIG
SCREENED CABLE
TYPE:-
16·2·3C
29:05:98/3120/N.P.G.

3.14.11 Mk.6 EGA Internal Layout (Shown without cover, for Clinical Waste Application e.g. O_2 & CO Cells only).

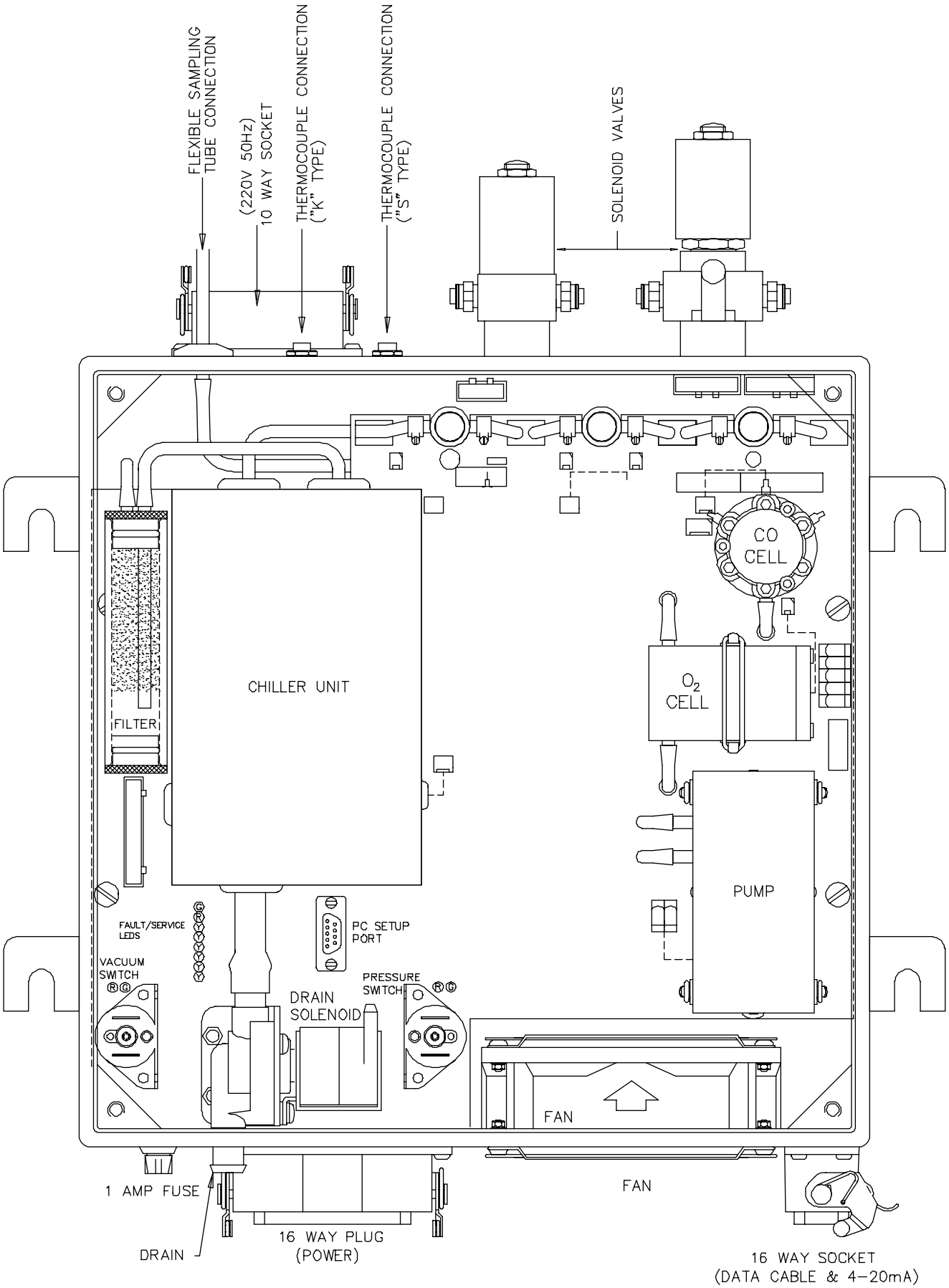

17:10:96/3113/GM

3.14.12 General Assembly of Dry Filter

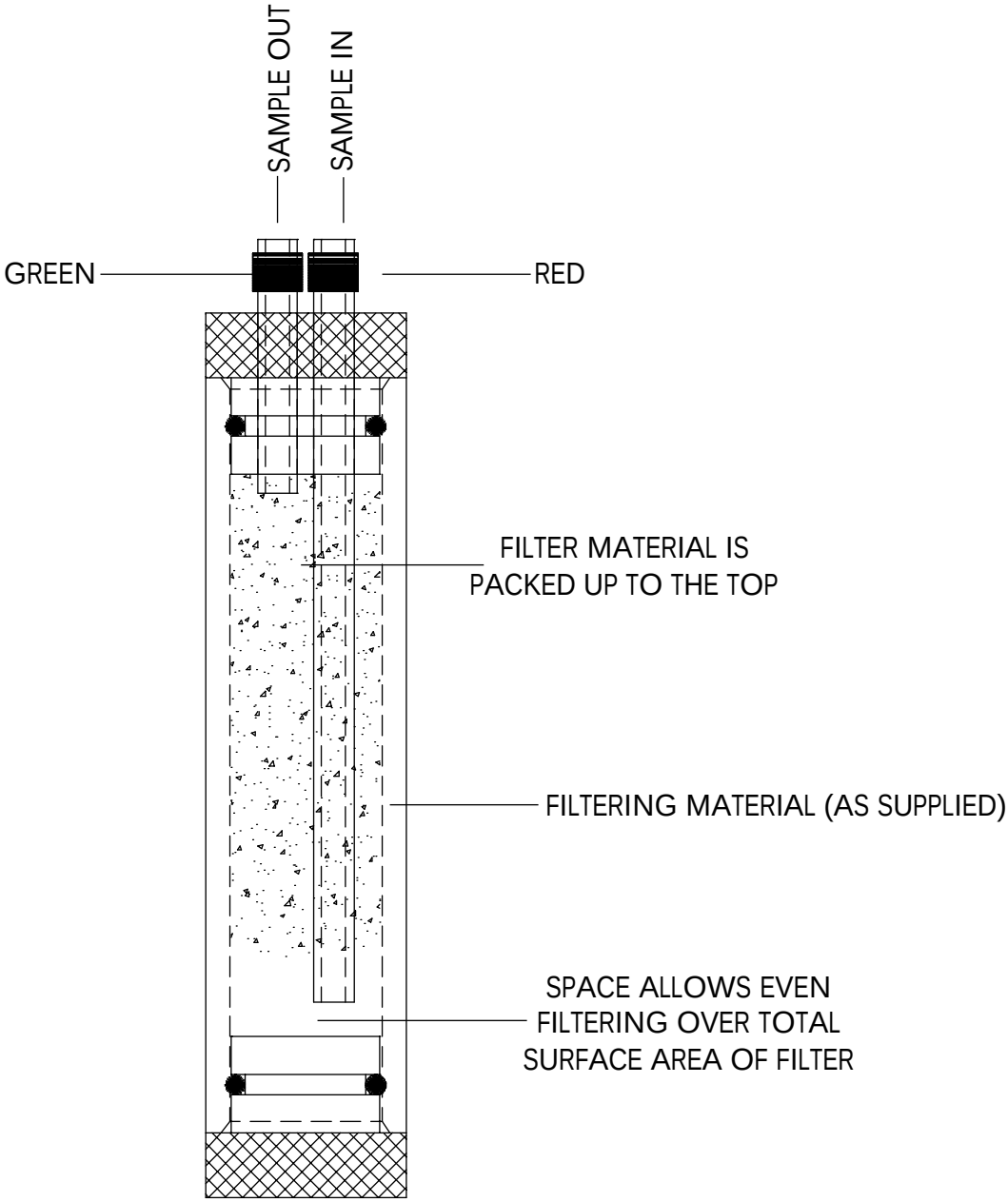

N.B. FREE SPACE MUST BE LEFT AT BOTTOM TO STOP ANY PREMATURE BLOCKAGE
THE SAMPLE IN & OUT PIPES MUST BE CONNECTED CORRECTLY OR BLOCKAGE
WILL OCCUR WITHIN A FEW HOURS.

3.14.13 General Assembly & exploded view of the Particulate Filter

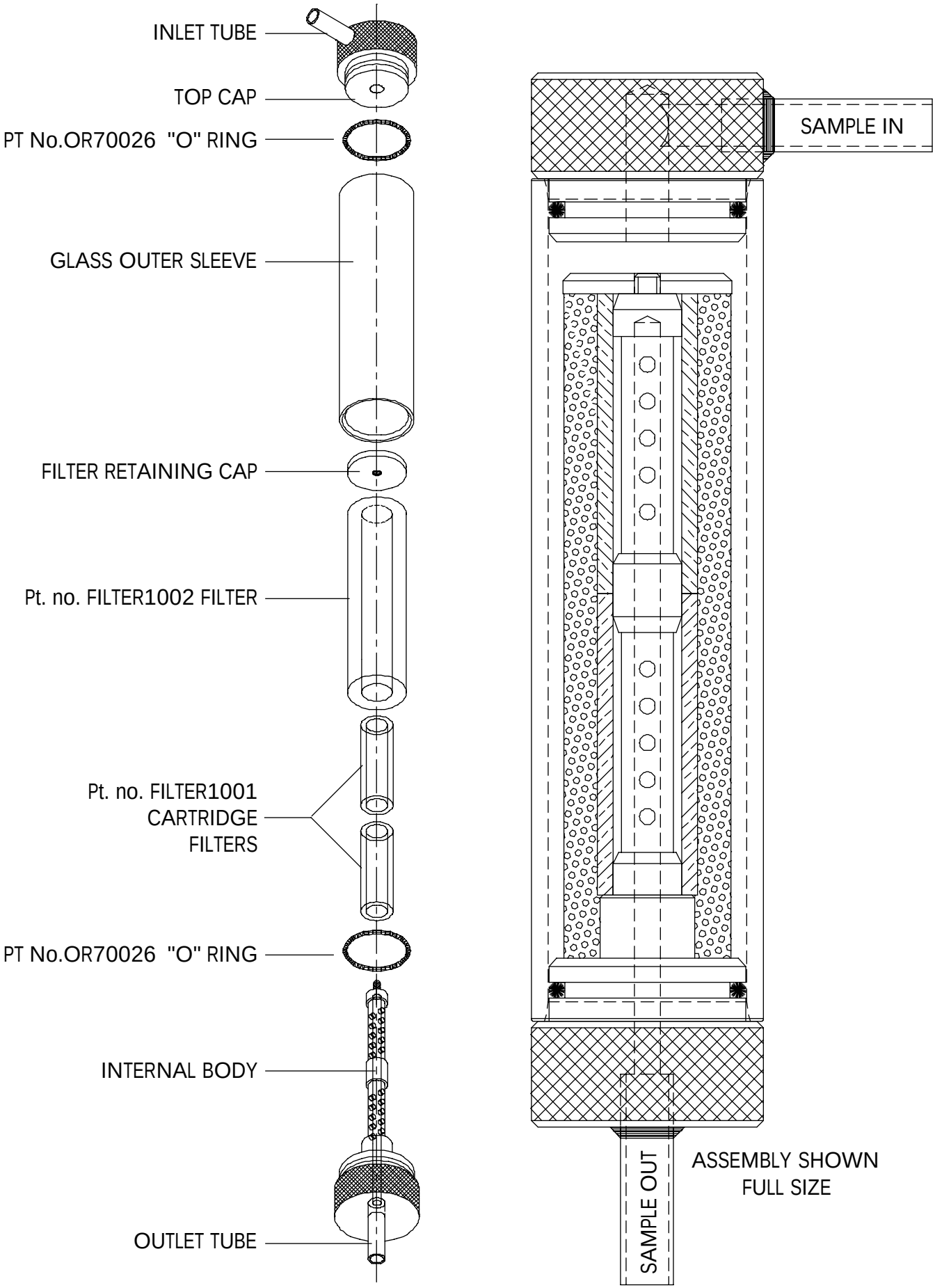

3.14.14 General Assembly of Bubble Pot

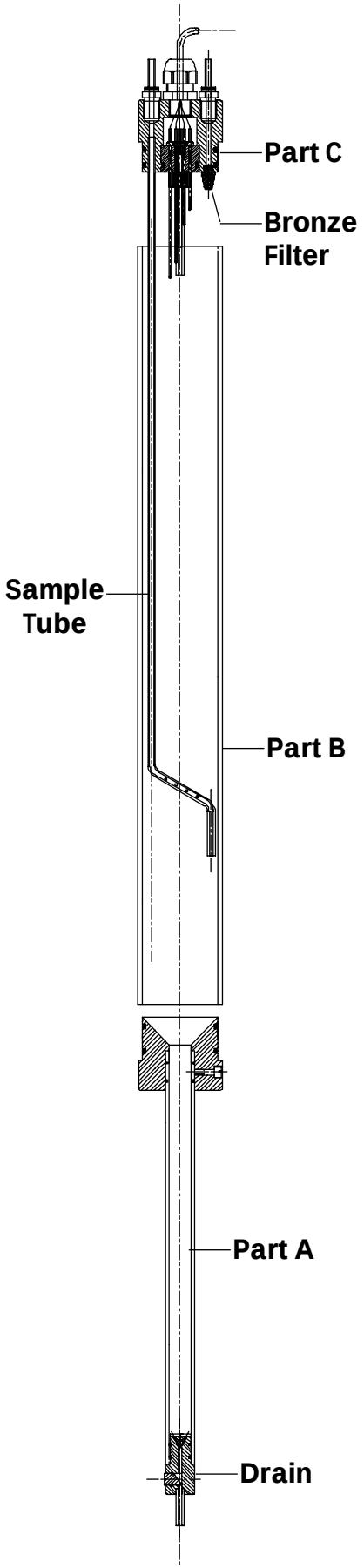

To Dissasemble the unit:-

1. Disconnect all piping & wiring from Part C
2. Allow water level to drain out.
3. Place over clean bucket & remove Part A from Part B by gently rotating.
4. Once all the glass filter balls have been removed Part C is free to be disengaged.

Note*
If Part C is rotated whilst all the glass filter balls are in place the "Sample in Tube" will be damaged.

To Assemble the unit:-

1. Fit Part B & Part C together.
2. Fill the unit with the glass filter balls.
3. Insert Part A by gently rotating.
4. Place unit upright & ensure glass filter balls fill down to the drain.
5. Connect pipework & wiring.

3.14.15 "S" Type Thermocouple

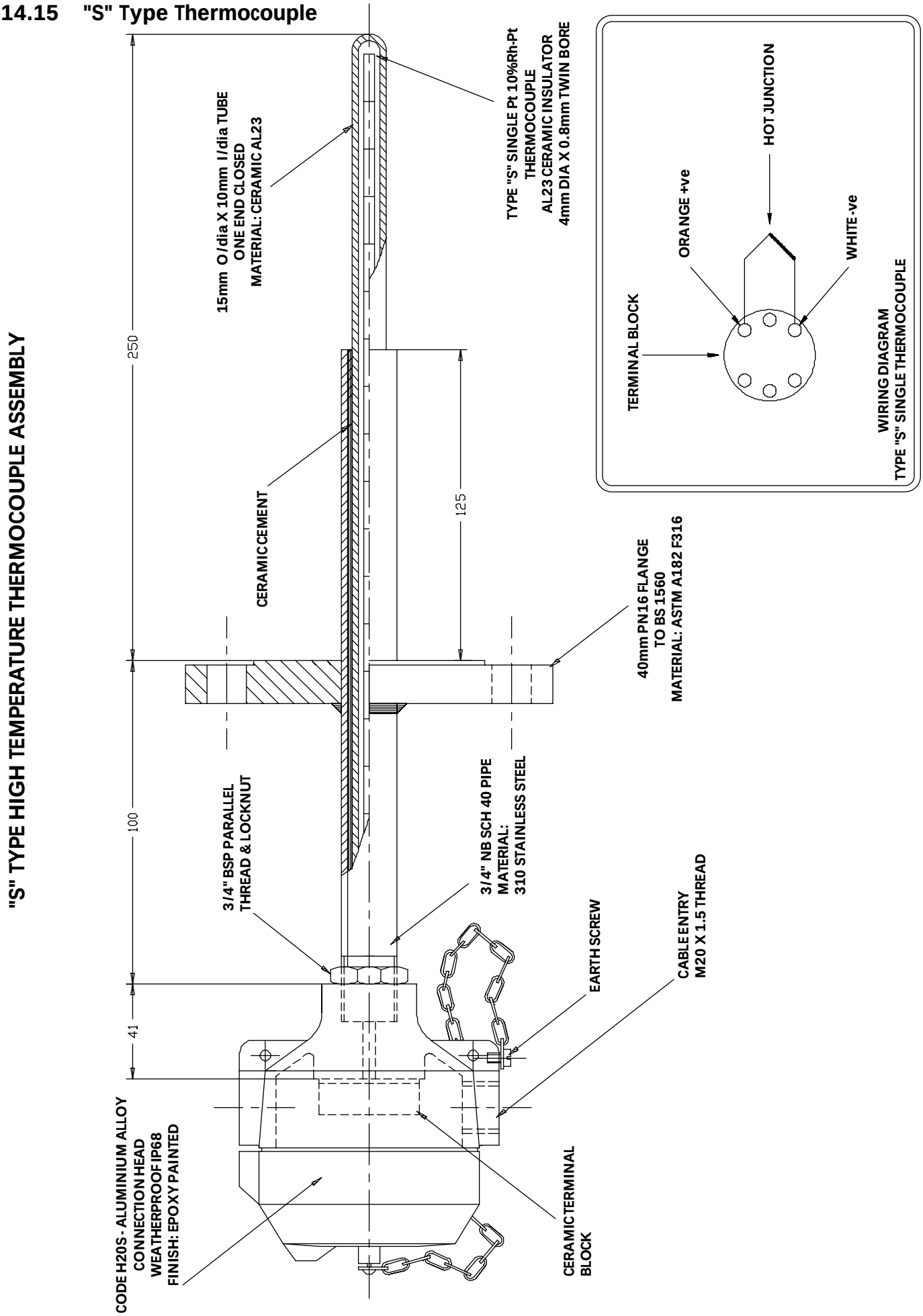

3.15 High Temperature Probes

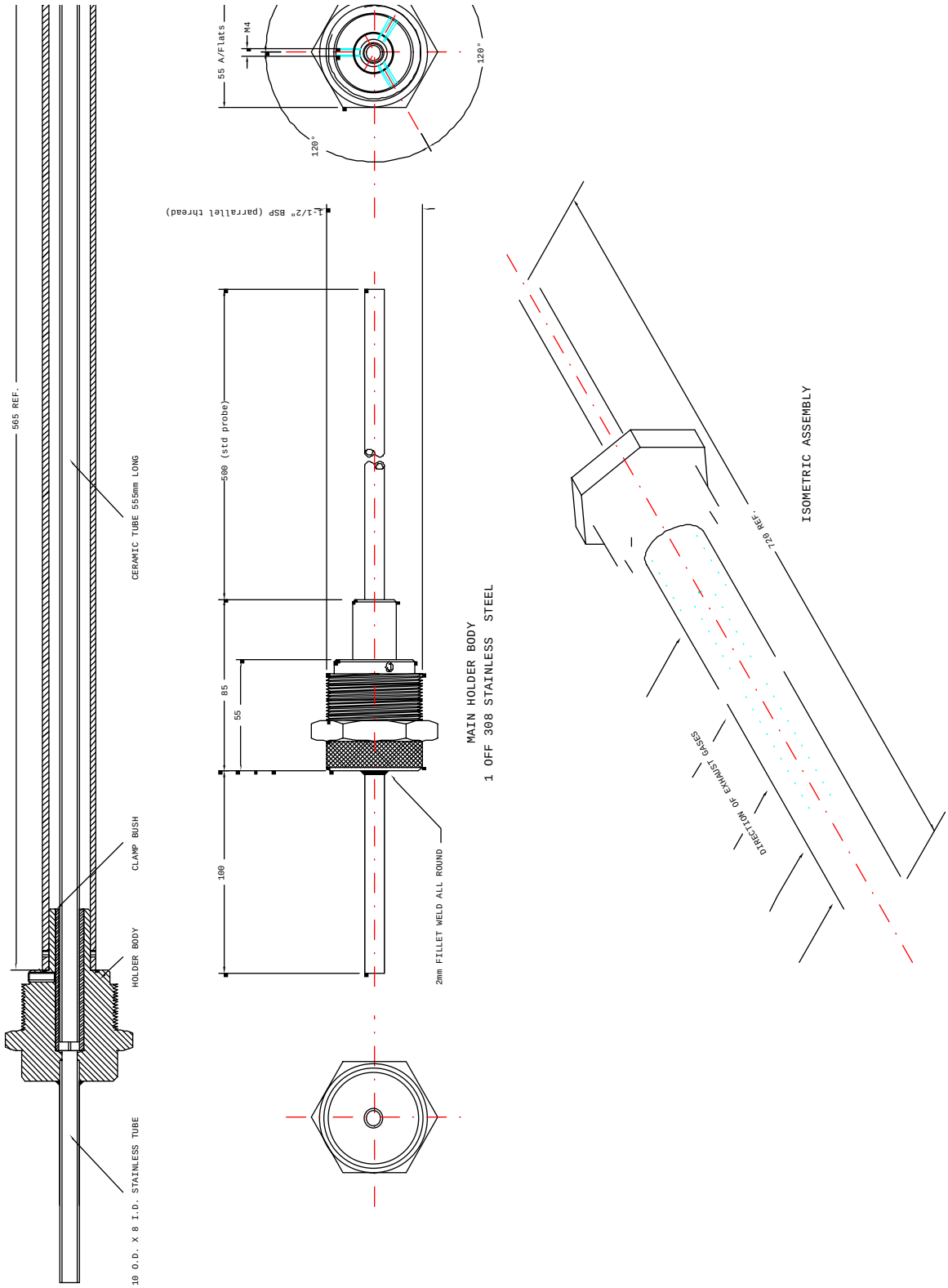

3.15.1 Ceramic Sampling Probe Assembly

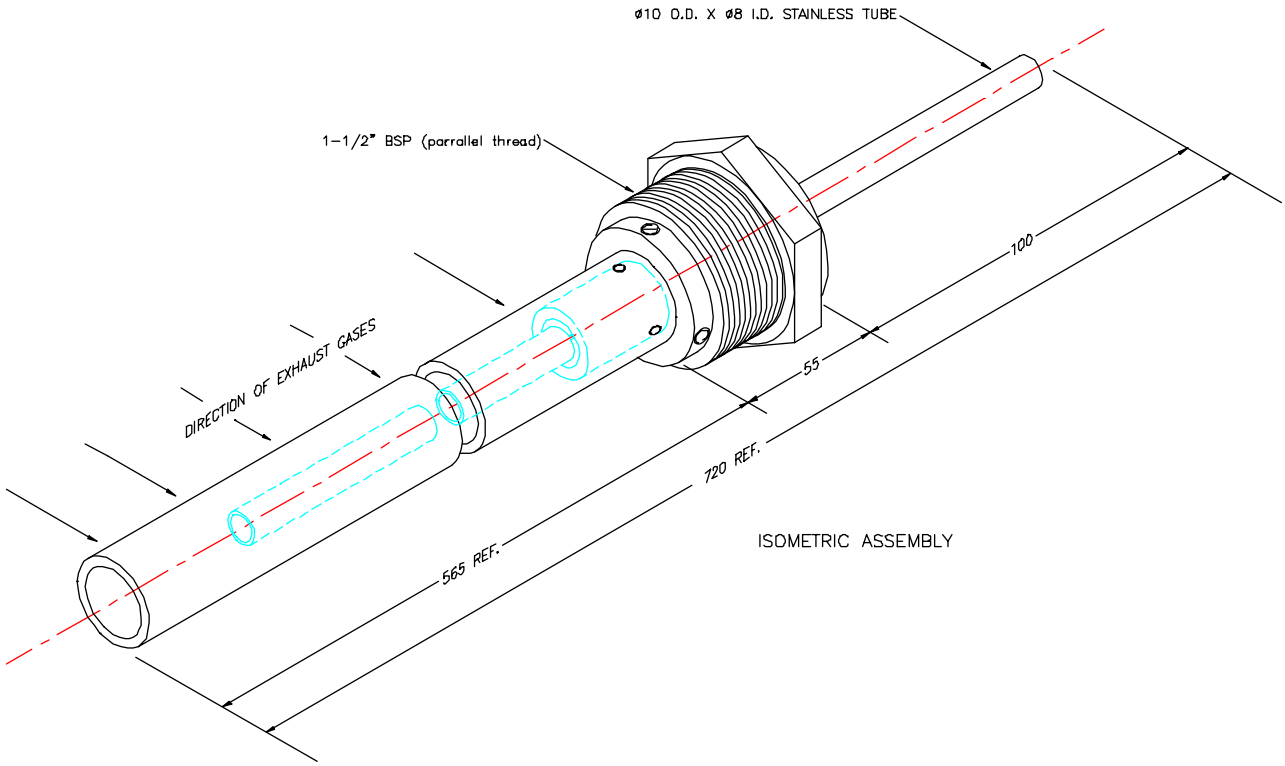

3.16 Shipping the E.G.A.

The EGA is a scientific instrument with delicate components. Whenever the EGA is shipped, it is essential that the EGA is packed carefully in an Autoflame EGA shipping carton as originally supplied.

Ensure that delivery carriers treat the package appropriately. Label the package as containing delicate scienctific instrument.

If the EGA is damaged, repair costs will be incurred.

Please contact Autoflame Engineering or your local dealer to obtain a new Autoflame carton.

Section 4: I.B.S. Intelligent Boiler Sequencing

4.1 INTELLIGENT BOILER SEQUENCING (I.B.S.)

Overview of System Operation: Features and Benefits

The Intelligent Boiler Sequencing software, which is included in every M.M. E.G.A. module, further extends the application possibilities of the system. The objective of this control form is to ensure that the minimum number of boiler/burner units are in operation at any one time to satisfy the heat requirement imposed upon the boiler plant, particularly in the case of multi boiler installations.

There are two variations of I.B.S. software that can be selected by the user via the Options procedure. The first variation relates to heating boilers and the second variation to steam boilers.

Heating Boilers Sequential Control:

A maximum of ten M.M. E.G.A. modules may be interconnected by a two wire screened data cable: (See interconnection drawing). Any string of modules interconnected as detailed can have one of it's number designated No. 1 or lead boiler. This identifying of "lead" boiler is achieved by either of the following methods:

a) Connecting a mains voltage onto terminal No. 41.
b) Instructing the modules via the D.T.I. module (Data Transfer Interface) by software.

Once a "lead" boiler has been selected the system works in the following way:

Typically every five minutes the sequencing software in the lead boiler identifies it's own firing rate by looking at the position of the fuel valve in the load index and also the maximum heating capacity of the No 1. "lead" boiler. This information would normally be entered when this boiler/burner unit is commissioned. Having established percentage firing rate, and maximum heating capacity, the I.B.S. software calculates the amount of heat being contributed to the system by this boiler. The I.B.S. software in the "lead" M.M. E.G.A. module then contacts in turn each of the modules connected to this loop and gathers similar information from each. The "lead" module's I.B.S. software then calculates the minimum number of boiler/burner units that need to be operational to satisfy the building load, imposed upon the plant at that time, and switches the remainder off. There is a terminal connection on the M.M. E.G.A. module for controlling a two port valve that would normally be installed in the boiler's return pipe connection to the common return header. This facility ensures that boilers that are switched "off line" do not contribute return temperature water to the flow header thereby diluting the flow temperature to the building: (See relevant data sheets and drawings showing the control sequence detailed above).

Example:

There are four boilers interconnected as above, each with a heating capacity of 586kw (2 Mbtu.) In the event of each boiler firing 440kW (1.5 Mbtu) (3/4 of it's maximum rate), the No. 1 lead boiler would instruct the No. 4 boiler to shut down and boilers No.s 1, 2 and 3 would adjust their firing rate to maximum. In both cases the boilers are contributing 1758kW (6 Mbtu) to the system but, after intervention of the I.B.S. sequencing software, three boilers only are carrying the load which is a more fuel efficient method of operation.

If the building load continued to decrease the three boilers would reach a point where they were each firing 390kW (1.33 Mbtu) each.

At this point the I.B.S. software would switch off the No. 3 boiler as two boilers would be capable of generating the 1172kW (4 Mbtu) required. When the load on the system increases, the reverse procedure applies, i.e. when, for example, two boilers are firing at near 100% load and the setpoint temperature on either of the modules is not being achieved, the I.B.S. software would switch on a third boiler to assist with the generation of the heat requirement. Any boiler can be nominated "lead" boiler by the connection of an input to the appropriate terminal or by a software instruction via the D.T.I.

Steam Boiler Sequential Control:

When the I.B.S. software control package is applied to steam boilers, it's operation is exactly the same as above but with the additional features and enhancements as explained in the following.

In the case of heating boilers only two states in the control form exist, either on or off. When steam boiler variation of I.B.S. is optioned there are three states which are controlled sequentially.

The first is "on-line", this is when the boiler is operating purely under the control of the M.M. E.G.A. module's internal P.I.D. load controller.

The second state is "Standby Warming": In this case the boiler is operated at a reduced pressure setpoint, and runs for a number of minutes each hour: e.g. if the on-line boiler or boilers are set at a setpoint of 7 bar (100 p.s.i.) the standby warming boiler controls at a setpoint of 5 bar (72 p.s.i.). In this way if the load increases the standby warming boiler can begin to contribute steam quickly. The reduced setpoint is a user variable option in the same way as the normal control pressure setpoint. The number of minutes run time is also adjustable.

The third state is "off-line", this is with the burner shut down and the boiler cold. If the load on the boiler house increases, this boiler would move into a "warming" condition.

Apart from the variations detailed above, the steam sequencing works in precisely the same way as the heating boiler sequencing: The sequencing software package ensures that at all times the minimum number of boilers are operational to satisfy the load imposed on the boiler house.

Note:

It should be appreciated that all data and control variables can be shown on a screen via the addition of the D.T.I. module to the data loop. The screen and keyboard can be sited locally in the boiler house or the whole system can be addressed remotely via the normal telecommunications network.
In the software in the D.T.I. there is a histogram facility which shows the firing rate and state of each boiler in the boiler house.

4.2.1 GUIDE TO COMMISSIONING SEQUENCING

Before any attempt is made to implement Sequencing operation, it is necessary that the fuel/air positions and load index are already entered. Refer to Sections 2 or 3 for Commissioning fuel/air positions.

The load index is implemented using the same ten point load index entry method used for the Flow Metering as detailed in Sections 2 and 3 of the manual. If the Flow Metering has already been optioned and the ten point load index entered then it is not necessary to enter this again. However if it is not entered, proceed as detailed below.

1. Set Option 57 to Value 1 (Refer to Section 2.2.4 - Setting Options).

2. Press ENTER MEMORY whilst 57 and 1 are being displayed in the Air and Required windows respectively.

3. Next time the burner starts the M.M. will automatically go into the ten point load index entry mode. The firing range is automatically divided into ten equal parts. Each of the ten divisions from high to low has a fuel flow value in whatever unit of flow measurement the user requires allocated to it. (All extrapolated fuel flow values between the ten points are calculated from a "best fit" mathematical formula).

4. In this mode the Fuel Position window will show fuel value in degrees angular.

   The Air Position window will be blank.

   The Required window and its associated buttons will be used to enter the fuel flow in the chosen fuel flow unit per minute value.

   Note:

   a) The Actual window confirms to the commissioning engineer which of the 10 points are currently being measured.

      When the positioning motors are moving from one calibrated point to another the Actual display flashes. When it reaches the next point to be calibrated, with a flow value, the display remains steady.

   b) The minimum numerical value for fuel flow that can be entered into memory is 0.01. The maximum numerical value for fuel flow that can be entered into memory is 999.

   c) The values are entered in descending order, i.e. Point No.1 is maximum flame and Point No.10 is at minimum flame.

The 10 sequential points on the load index are allocated automatically by the M.M.

5. When fuel flow has been calculated or read off of a commissioning fuel flow meter the value is entered as detailed in Point No.4.

   The [ENTER MEMORY] button is then pressed and the flow value is passed into the M.M. memory.

6. The above detailed data entry routine is repeated until all 10 points have flow values allocated to them.

7. When the last (10th) point has been entered the M.M. stops the burner and implements the calculations necessary to enable the Load Index to be actioned. Whilst the calculations are being carried out a rolling decimal point is displayed.

8. If it is not required to subsequently display the Flow Metering values, set Option 57 back to value 0.

9. If implementing "hot water" Sequencing set Options as follows ON EACH M.M.:

   Set Option 16 to Value 1 or 3.
   Set Option 33 to identification number accordingly.
   Set Option 34 to the rating of burner.
   Set Option 35 to time between Sequence scans.
   ENSURE OPTION 53 IS SET TO 0.

10. If implementing "steam" Sequencing set Options as follows ON EACH M.M.:

    Set Option 16 to Value 1 or 3.
    Set Option 33 to identification number accordingly.
    Set Option 34 to the rating of burner.
    Set Option 35 to time between Sequence scans.
    Set Option 53 to the time required for the boiler to be off.
    Set Option 54 to the time required for the boiler to be on.

    Note: Options 53 and 54 are relevant to the "Stand-by Warming" state.
    Option 53 is the indication to this M.M. that the Sequencing being done is either hot water or steam (i.e. 0 - Hot water, non zero value - Steam).

4.4 ELECTRICAL SCHEMATICS

Sequencing Connection Diagram

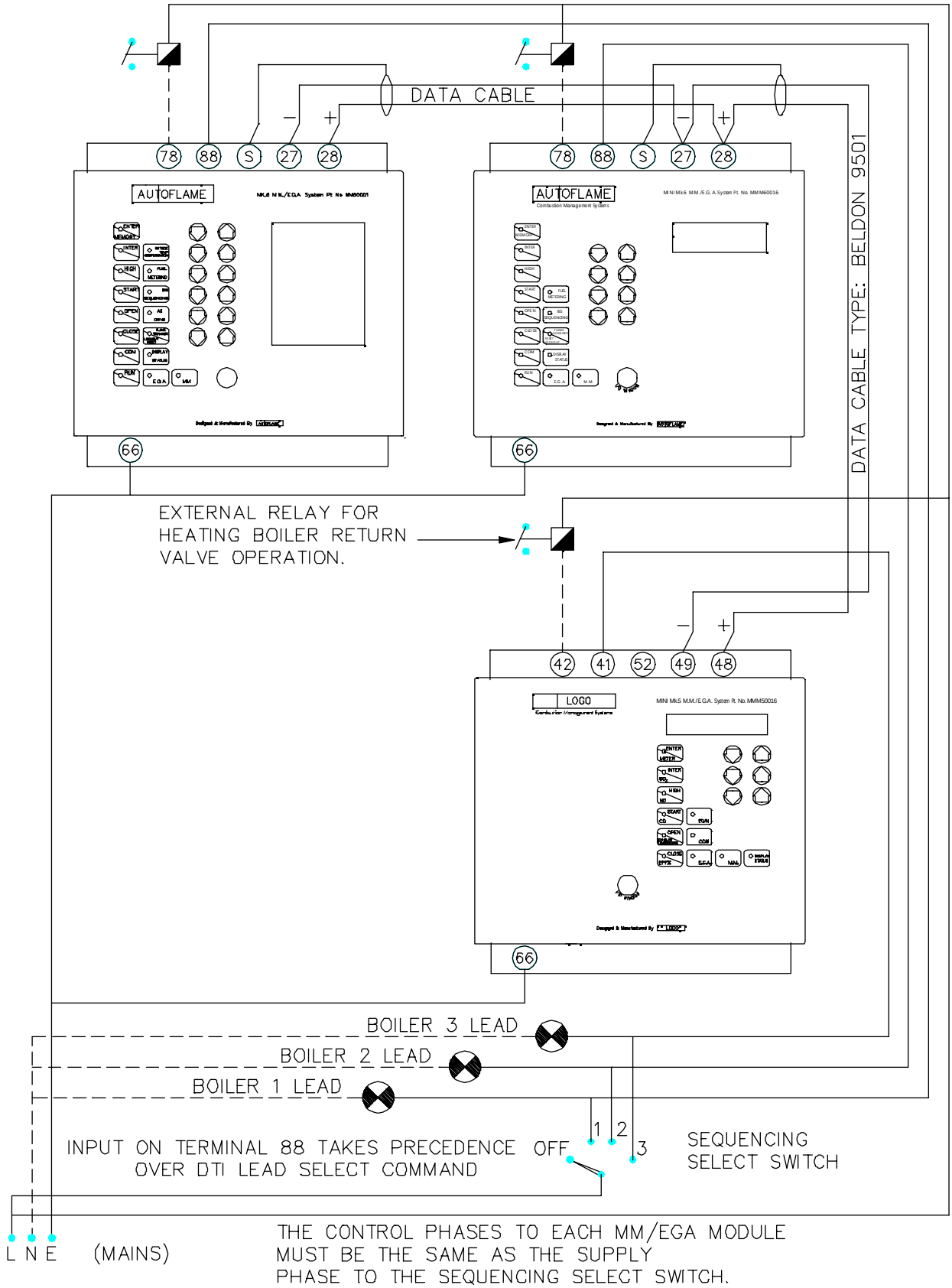

DTI / Sequencing Connection Diagram

If a voltage on terminal 88 is used to select lead boiler, it will take priority over a lead boiler set via the DTI.

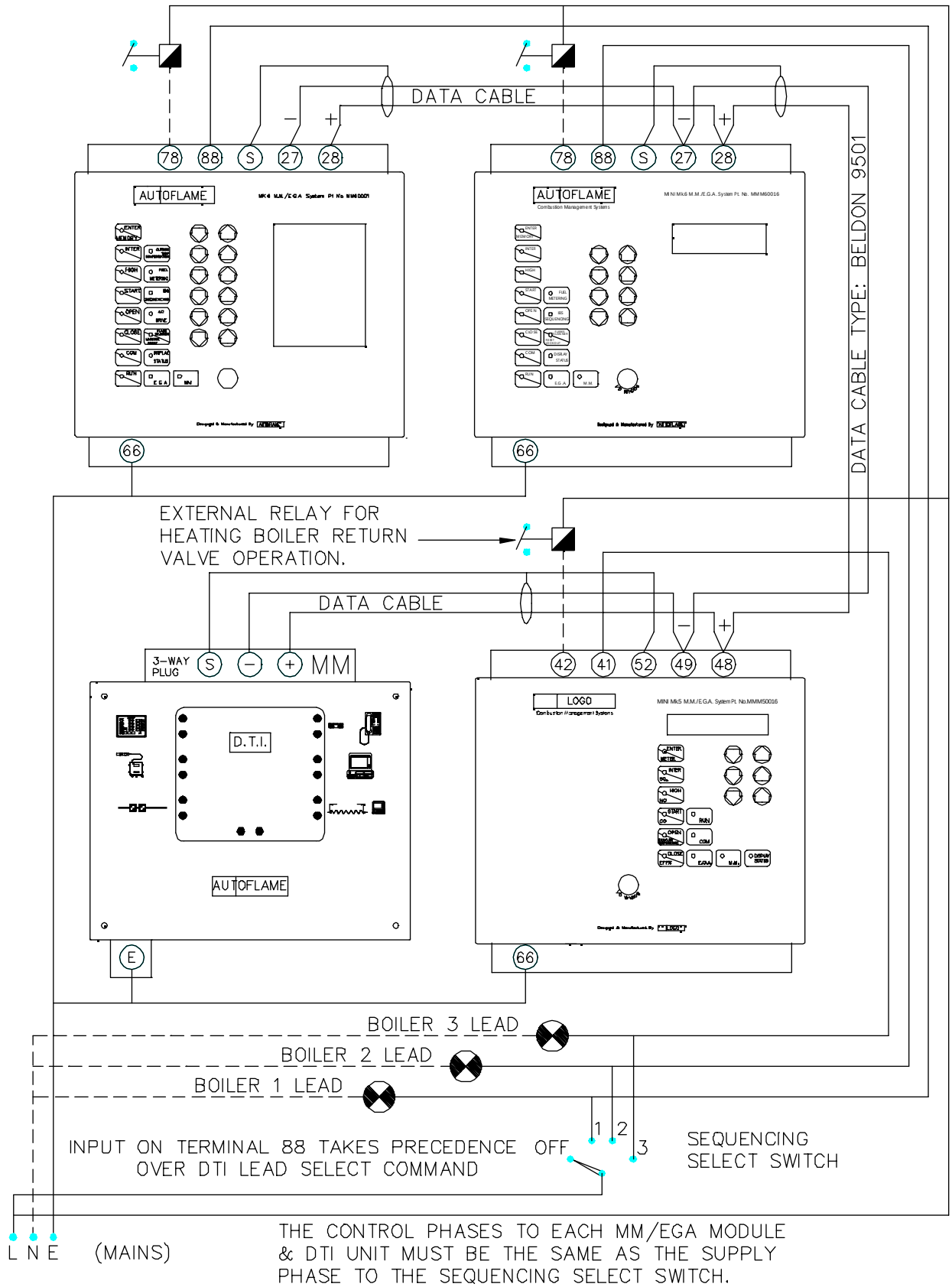

SEQUENCING OPERATION

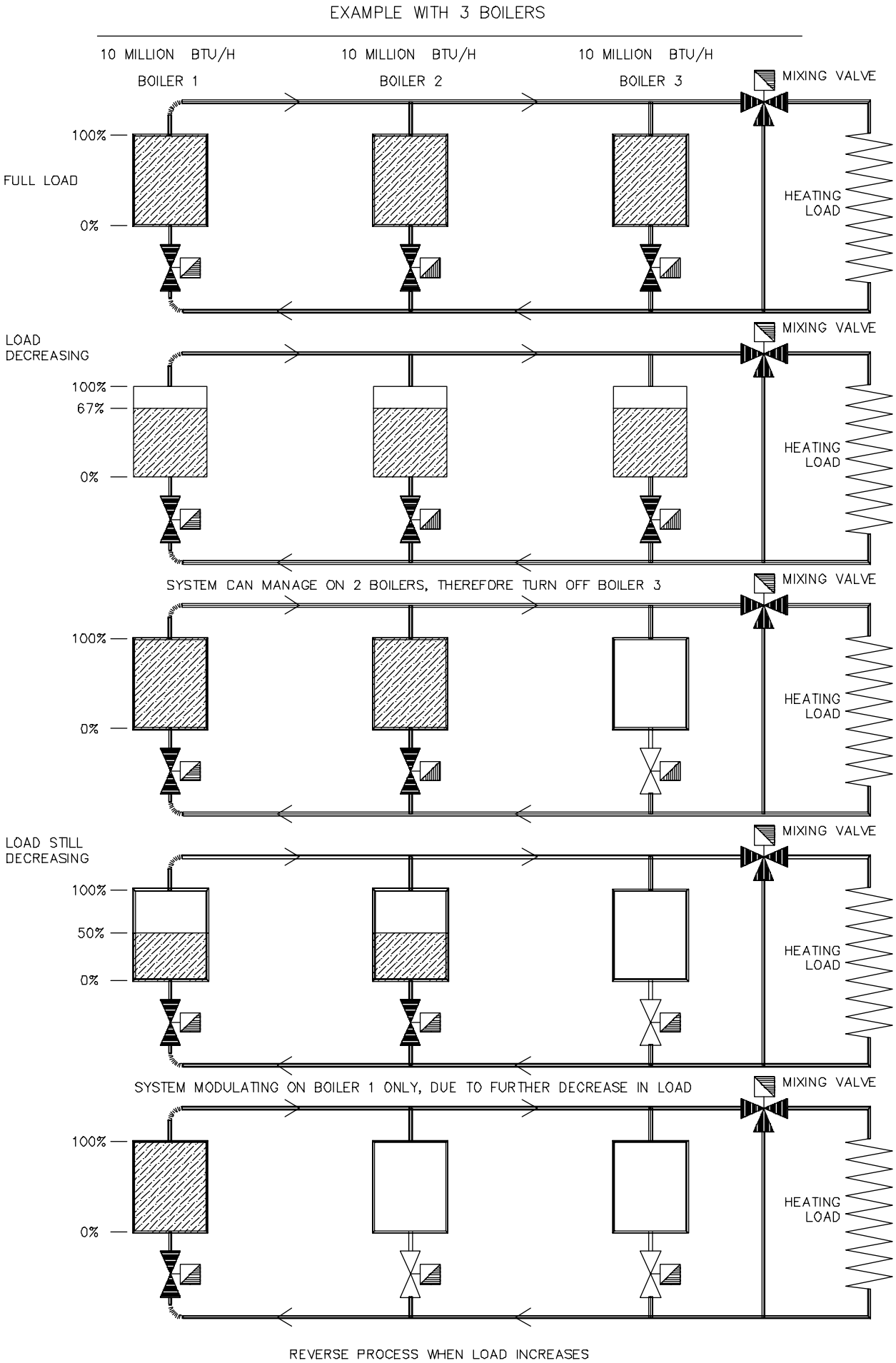

SEQUENCING CONTROL

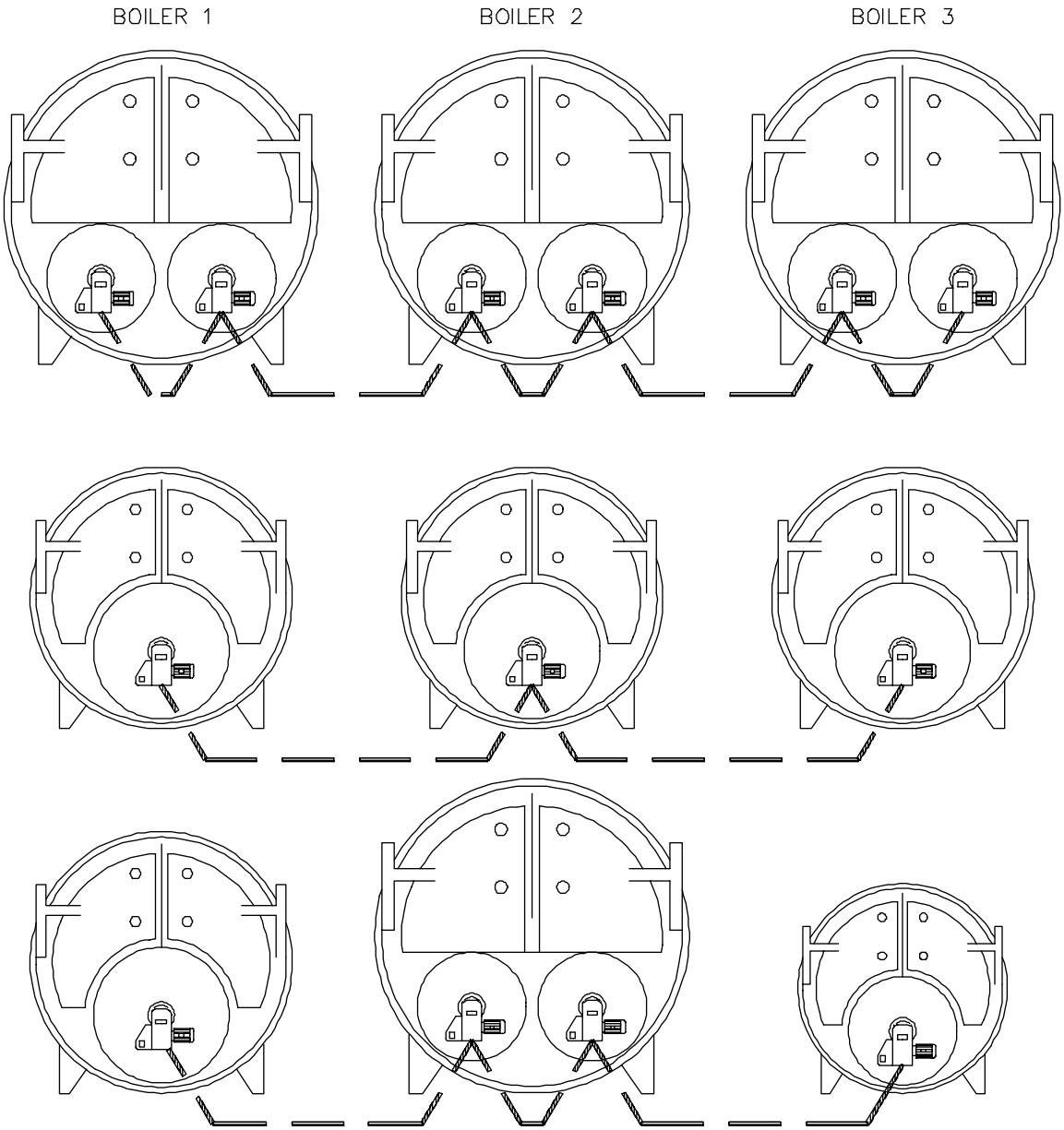

NOTE: TO OPERATE AUTOFLAME SEQUENCING A D.T.I. UNIT IS NOT REQUIRED

5: 5: 88/1319/SBK

Diagram showing Example of Data Communications with Reference to Flickering L.E.D.s

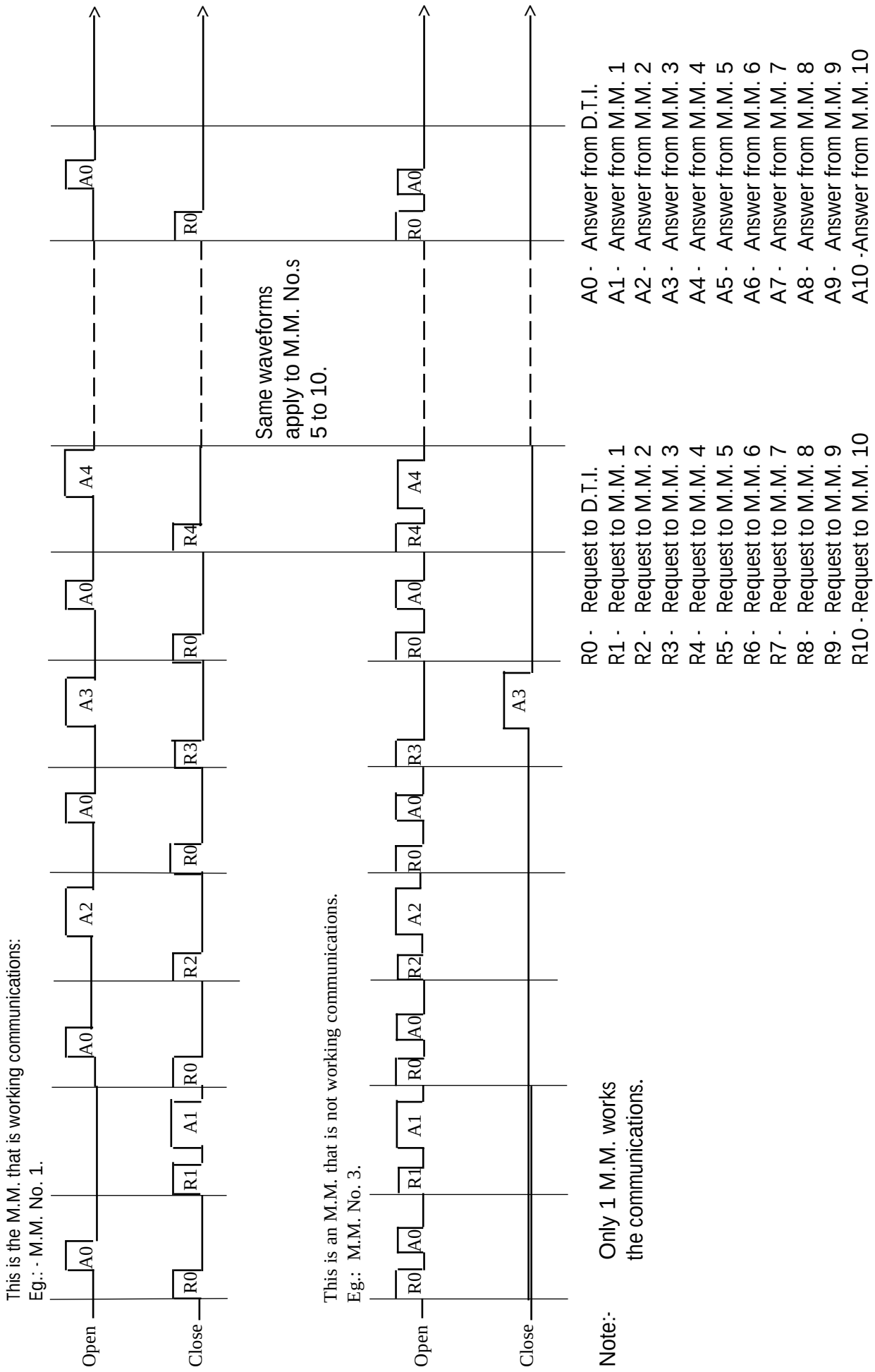

4.5.4 Mini Mk5 Sequencing Status Information

If parameter 32 = 1 then the information below is displayed instead of the Flow Metering Grand Total. (Totalising still continues to work in the background).

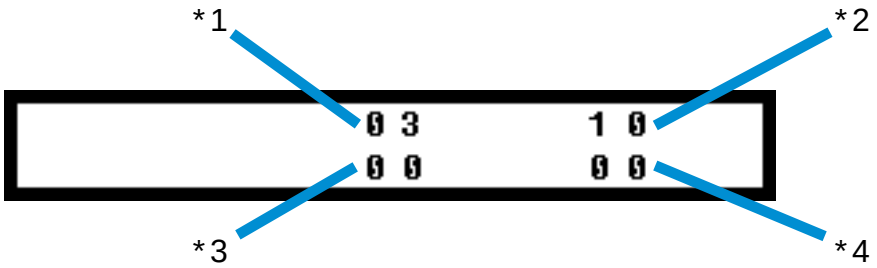

Sequencing Status Information

Sequence Code: Steam 0 On 1 Standby/Warming 2 Off 3 Off	Sequence Code: Hot Water On Off Off Off		*1
Receiving Sequencing Information 0 = No 1 = Yes	CR1 Relay Status 0 = Off 1 = On	Working Communications/ Sequencing 0 = No 1 = Yes	*2
Unused	Status of Input 41 0 = 0V AC 1 = 230V AC (110V AC)	Disabled Status 0 = Enabled 1 = Disabled	*3
Lead Boiler 0 = No Lead Boiler Selected 1 to 10 = Number of Lead Boiler			*4

Section 5: I.I.F. Inverter Interface

INTERCONNECTIONS BETWEEN
M.M./E.G.A. MODULE & INVERTER VIA
THE INVERTER INTERFACE MODULE

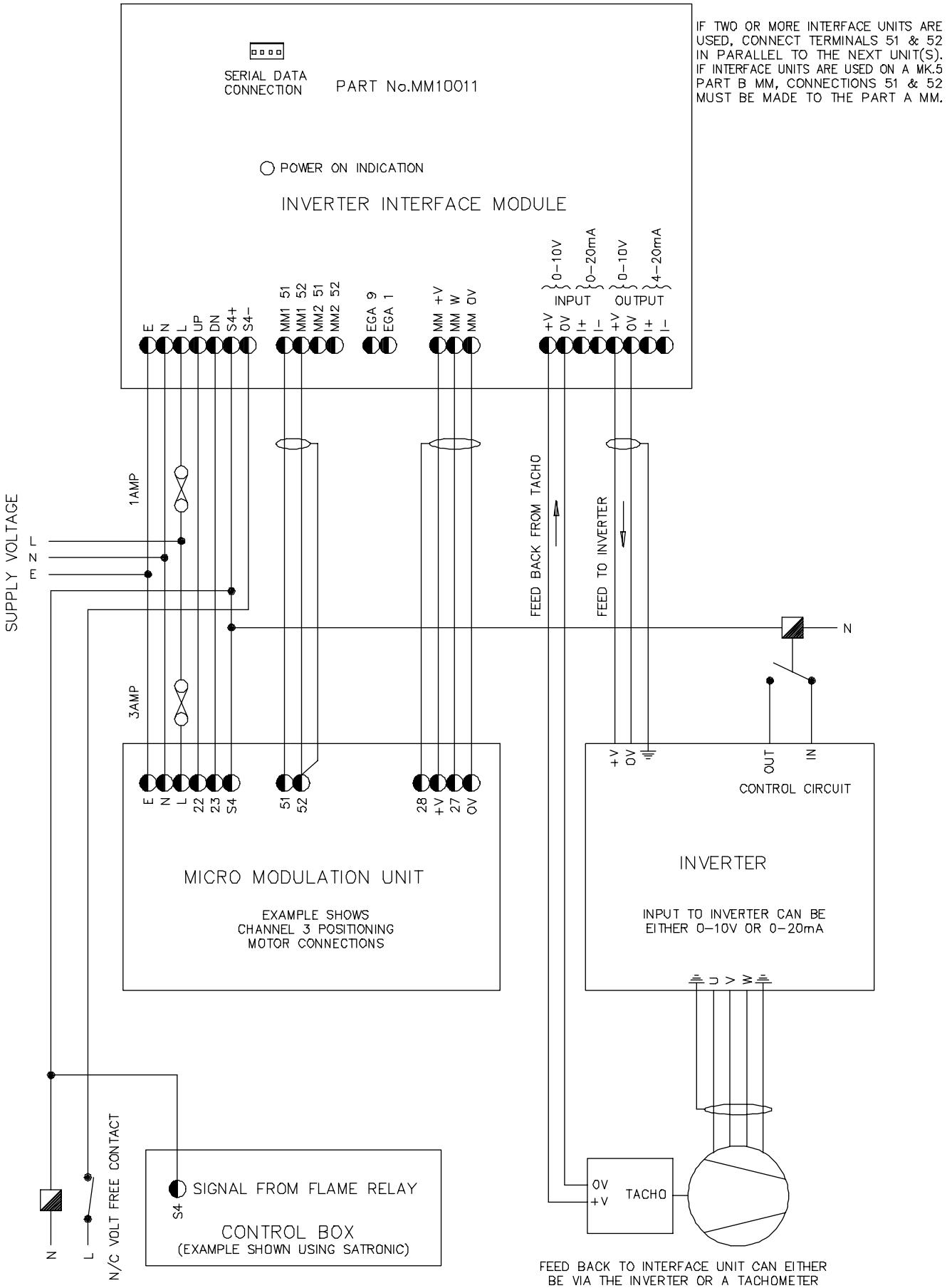

10:5:96/2215/GM

NOTE: FOR T.U.V. APPROVAL A TACHOMETER MUST BE USED FOR FEED BACK SIGNAL

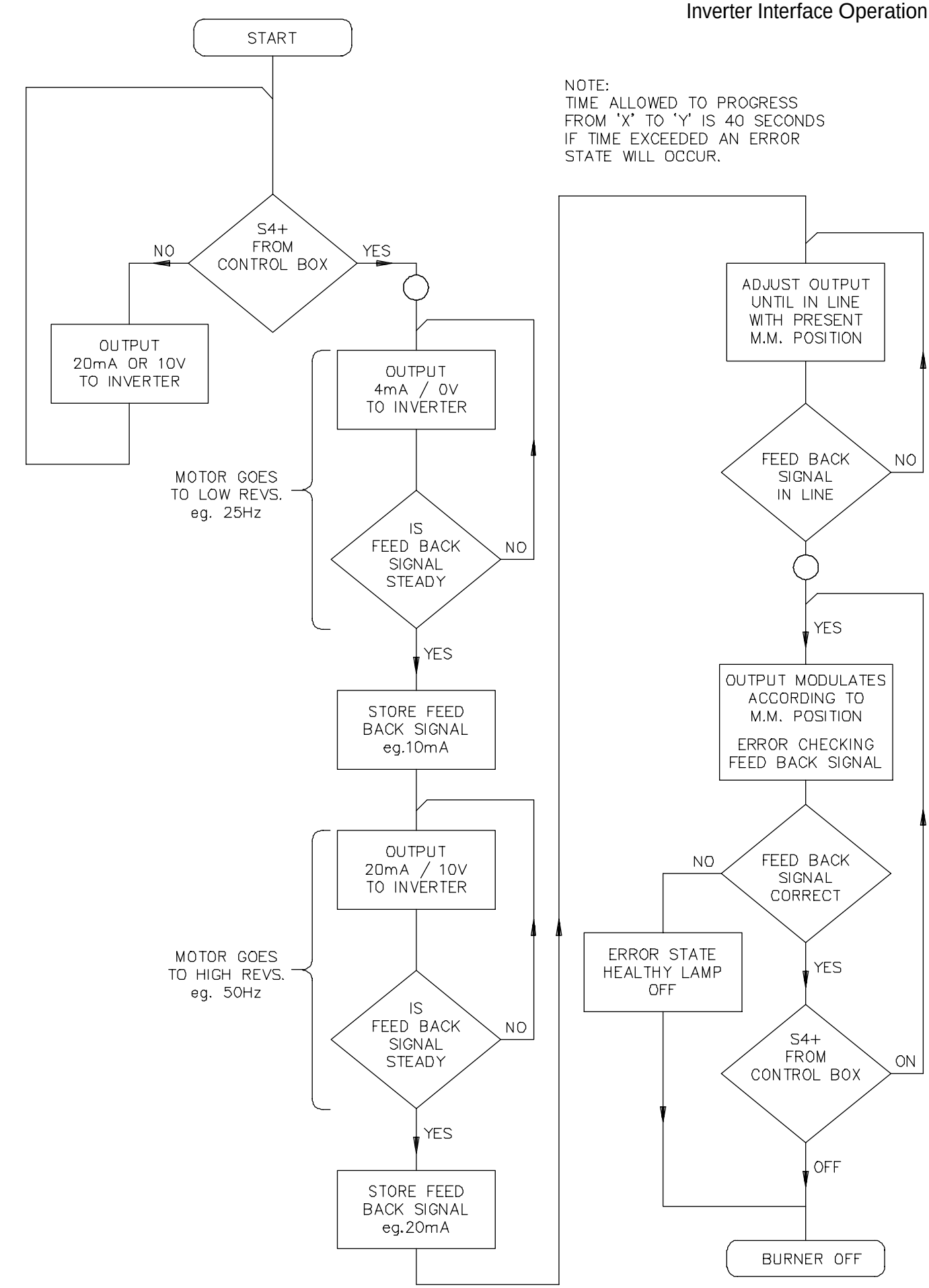

20:10:93/2323/SBK

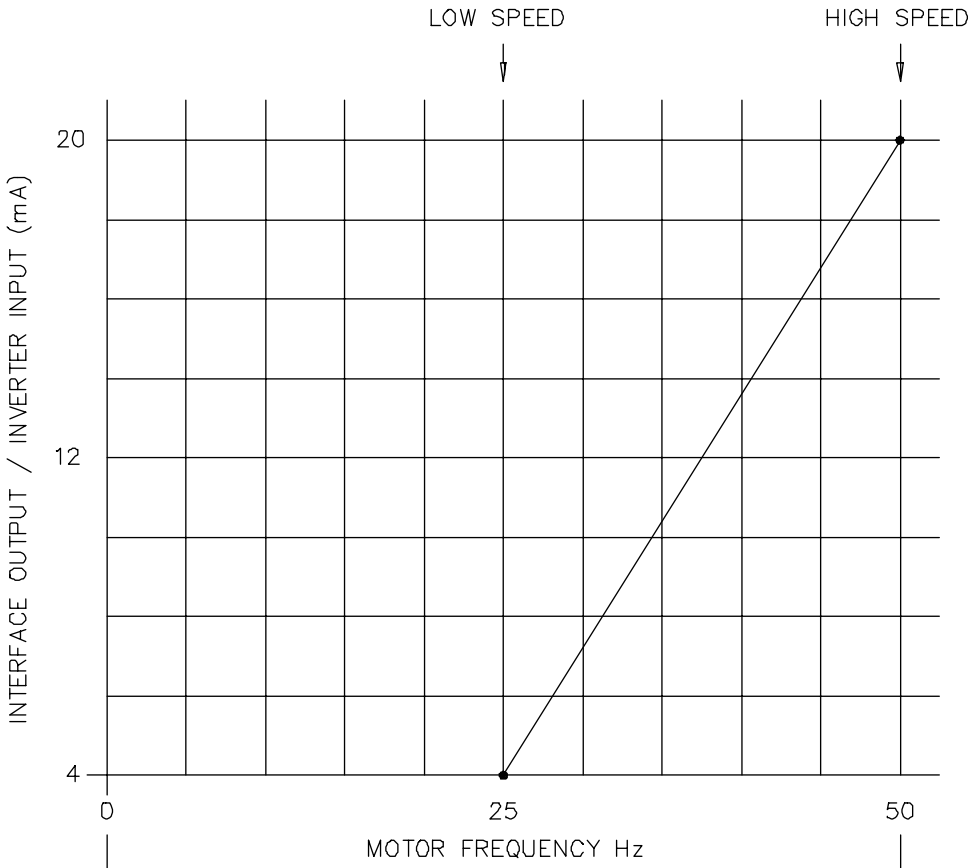

GRAPH A

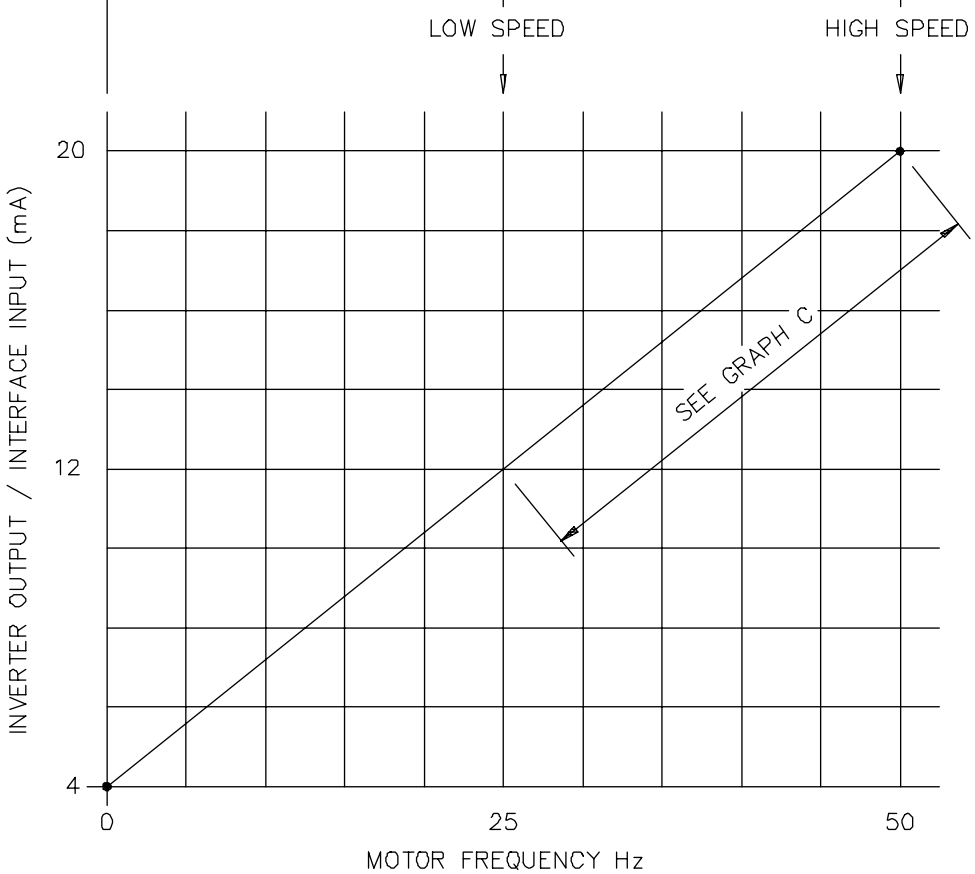

GRAPH B

WINDOW: CORRECT SIGNAL +/− 0.4mA or 0.2V
DISPARITY: SIGNAL CORRECTS FOR 3 SECONDS +/− 0.8mA or 0.4V

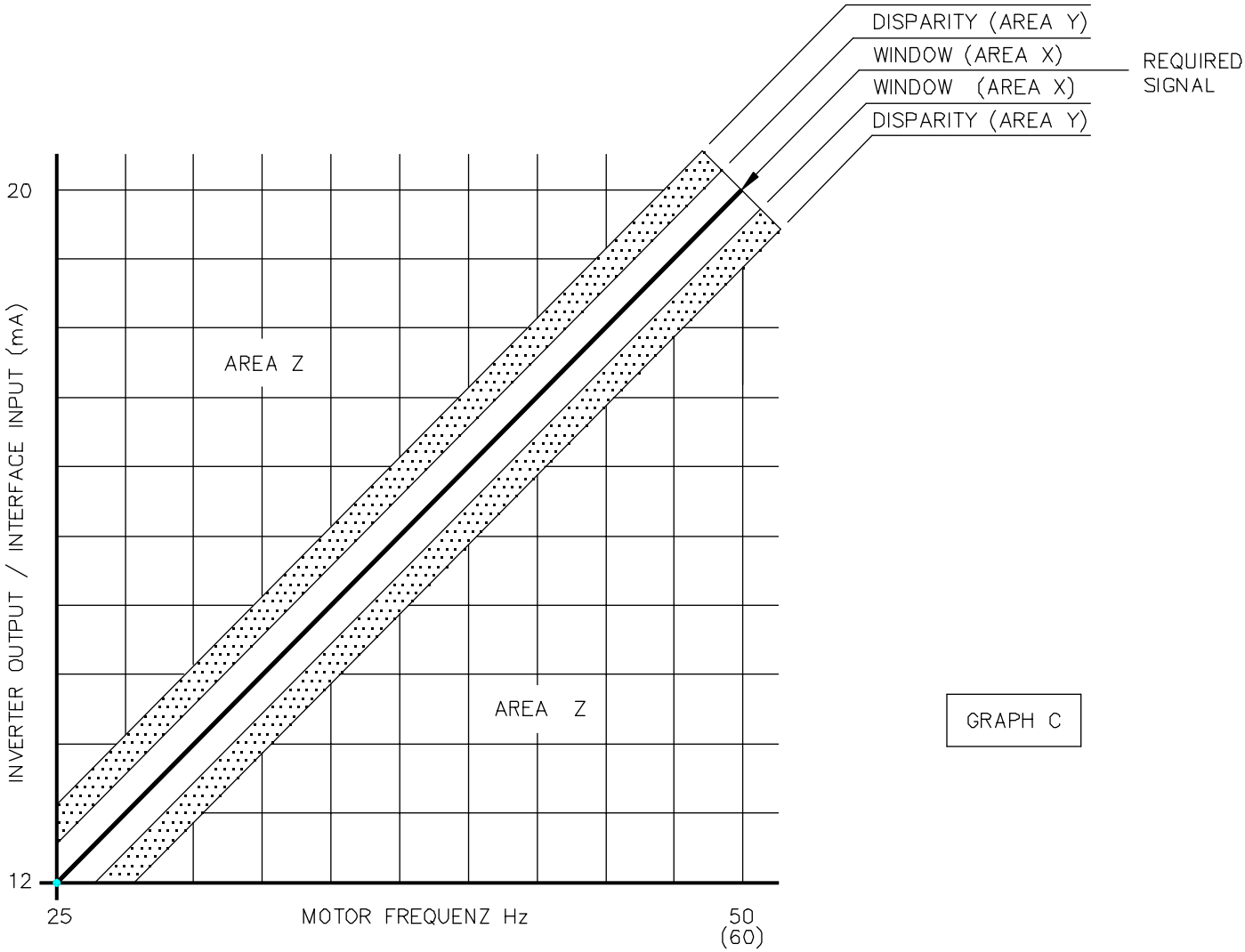

GRAPH C

13:05:98/2335/SBK

Installation

The following recommendations are to assist with the installation and fault finding when using part number MM10011 with variable speed drives (Inverters).

Inverter Selection

Variable speed drives selection is critical to proper operation. Ensure that correct size Inverter has been selected for the application and is suitable for the motor, and has the necessary input/output signals as shown in Drawing No. 2215 - Section 5.1.1.

Mains Cable Connections

Power connections from the Inverter to the motor. It is recommended for mains cabling (3 phase) and fuses, that they are to be dimensioned in accordance with the kW rating required.

Motor Cabling

A four core conductor screened cable is recommended. This is due to the rapid voltage changes occurring in variable speed drive systems.

To Avoid Disturbances

It is advised that the motor cables should not be installed with other cable routes: Avoid long parallel runs with other cables.

Disturbances caused by radiation from the motor cable can be reduced by installing in-line chokes in the motor cable, however these chokes may reduce the motor voltage and the maximum available torque. If noise problems exist and unstable output signals can not be contained within the window and disparity band shown on Drawing No. 2335, Section 5.1.4, you should contact the supplier of the Inverter for more detailed information and advice. It is recommended that if the current input on the Inverter Interface is used then a wire link should be installed across the 0V/+V input terminals.

Setting the Inverter for Operation

Due to the vast range of Variable Speed Drives it is not possible to give setting/parameters for all types, however the basic rules apply. The minimum and maximum Hz (rpm) should be adjusted before commissioning the Micro Modulation unit. Also the ramp time should be set for the fastest time possible, taking into account limitation of the motor and the application.

Normal settings would be, low speed 25Hz and high speed 50Hz. It is not recommended to set low speed lower than 20Hz. This is because the feed back signal tends to be unstable in this range.

Inverter Interface Safety Software.

In a typical example the motor speed at 50Hz would be 2900rpm and the motor speed at 25Hz would be 1450rpm. This example is typical as there is a linear relationship between linear speed and cycles Hertz.

The Software in the Inverter Interface allows the following amount of error (disparity) between signal out to the Inverter and signal return to the Inverter Interface.

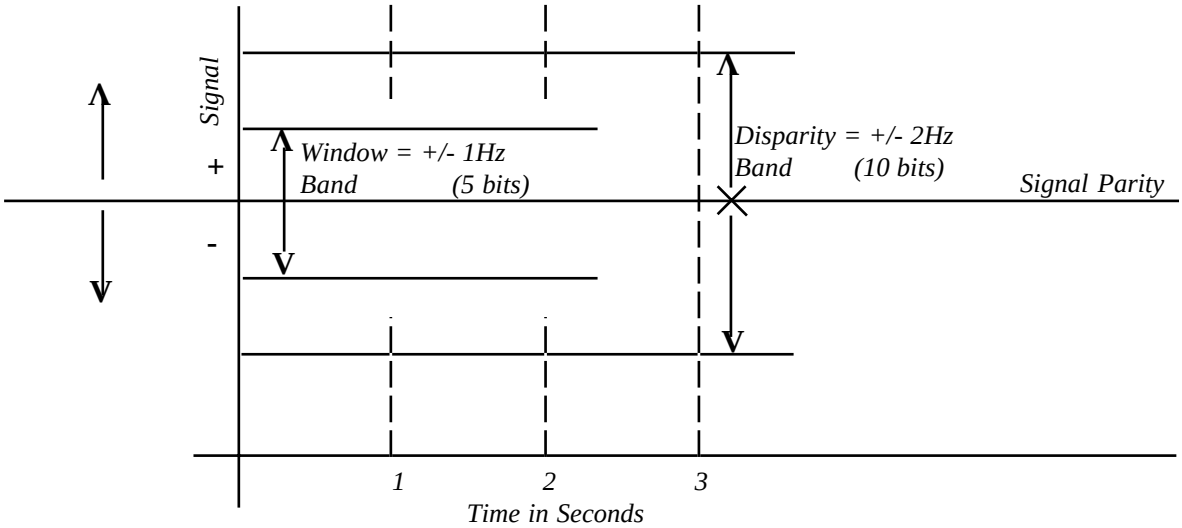

The "Window" tolerance has been implemented to accommodate small variations between input and output signal that result from processing through the various A-D and D-A converters involved in the control loop, also motor "Slip", acceleration and deceleration times, all of which produce small variations.

The "Disparity" tolerance which is time limited to a short duration is implemented to deal with the transient disparity/Error between input and output signals that results from the PI control mechanism that is typical in Inverters (motor speed control mechanism) not operating in phase with the PI (D) control philosophy in the M.M. (Micro Modulation Fuel Air Ratio Controller). This transient disparity occurs and is always self-correcting within the three second time tolerance nominated in our control philosophy.

1. Notwithstanding the above, to deal with transients of a very small time scale but of an amplitude greater than the disparity (area Y) as in Drawing 2335, Section 5.1.4, there is an additional mechanism in the software that allows transient deviations of any amplitude to be tolerated for a duration of less than one second. Under these conditions an Error will not be flagged.

   Note: Drawing 2335 (Area Z). Any signal deviation longer than one second in Area Z will activate safety errors.

   The tolerance within the T.U.V. Approved M.M. safety software is 3 seconds.

2. The "Window" tolerance is +/- 5 bits = 1 Hz = 58rpm (on a motor rotating at 2900rpm at 50Hz).

3. The disparity tolerance is +/- 10 bits = 2Hz = 116rpm (on a motor rotating at 2900rpm at 50Hz). Note that disparity band 2Hz is limited to a maximum of 3 seconds.

4. Fan laws state that
   a.) Speed and volume are a direct linear progression.
   b.) Speed increase as a percentage affects pressure produced by the fan as a square root function.

5. The variations in signal allowed in our software would have considerably less effect on the air fuel ratio supplied to the combustion process than variations in ambient temperature/air density etc.

EXAMPLE CABLE CONNECTIONS SPECIFICATIONS

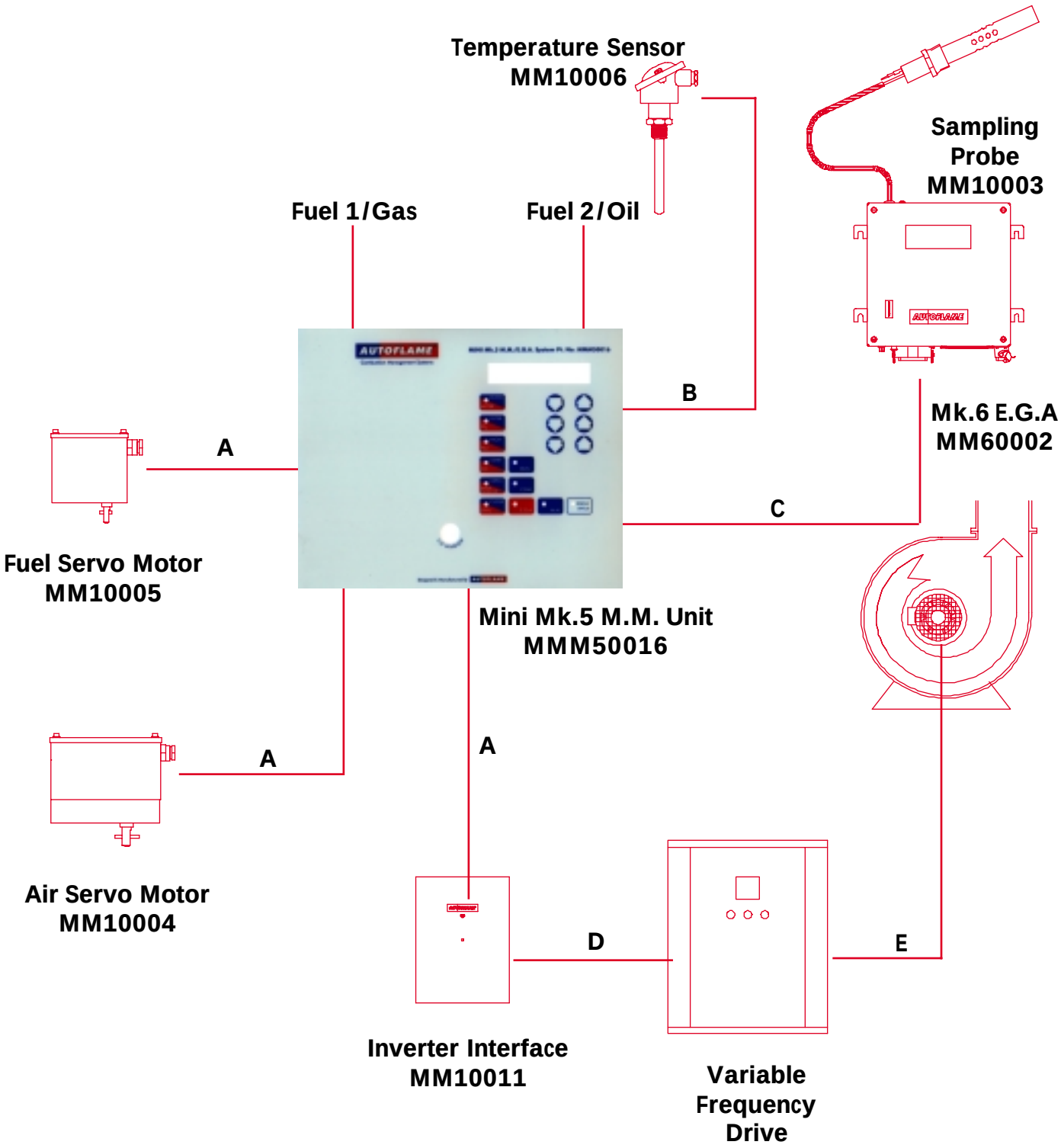

Cable Type Used:

A	=	16-2-3c Cores	}
B	=	16-2-2c Cores	} Screened
C	=	Beldon 9501 or STC 0S1P24	
D	=	16-2-6c Cores	}
E	=	4 Core Screened	} Screened

Please note the information in 2.9.11.2

Cable Specifications

The screened cable used from the M.M. to the servo motors and detectors must conform to the following specification:

16/0.2mm PVC Insulated Overall Braid, Screened, PVC Sheathed.

Sixteen wires per core;
Diameter of wires in each core 0.2mm;
Rated at 440 volts a.c. rms at 1600 Hz;
DEF 61-12 current rating per core 2.5 Amps;
Maximum operating temperature 70 degrees C.;
Nominal conductor area 0.5 square mm per core;
Nominal insulation radial thickness on core 0.45mm;
Nominal conductor diameter per core 0.93mm;
Nominal core resistance at 20 degrees C. 40.1 Ohm/1000m.;
Nominal overall diameter per core 1.83 mm.;
Fill factor of braid screen 0.7;
Equivalent imperial conductor sizes 14/0.0076.

Use the number of cores suitable for the application.
A universal part numbering system appears to have been adopted for this type of cable as follows:

16-2-2C 2 Cores
16-2-3C 3 Cores
16-2-4C 4 Cores
16-2-6C 6 Cores

(5 Cores not readily available).

Data Cable.

Data cable must be used for connections between M.M.s for twin burner/sequencing applications and between M.M.s and E.G.A.s.

Types of data cable that can be used:

1. Beldon 9501;
2. STC OS1P24.

Samples are available upon request.
Cable can be ordered directly from Autoflame Engineering.

Please contact Autoflame Engineering for advice.

"Points" Curve Operation

The essential differences between the existing and the improved new control philosophy for the Inverter Interface Module (With and Without 485 data line interconnection).

The essential philosophical differences in the control form are as detailed below under “The Existing Control Philosophy” and “The Improved/New Control Philosophy”.

The Existing/Original Control Philosophy EPROM 2.2

The existing control philosophy assumes that the fan speed moves in a linear progression from low speed to high speed as a function of the control output signal from the Inverter Interface to the Inverter. It assumes that the signal back from the Inverter to the Inverter Interface or from the tacho. to the Inverter Interface is a close facsimile of the output signal. There is a “window” and “disparity” band that is imposed on the return signal to accommodate tiny amounts of system hysteresis and pick up noise.

The control philosophy as detailed above assumes that the fan is operating in an air supply of unchanging density and pressure. (This is the case when the air damper is situated on the exhaust or pressurised side of the fan). The new control philosophy detailed below has been created to accommodate the situation where an air damper is on the inlet to the combustion air fan. This configuration causes slip between the magnetic circuit created by the Inverter and the measured R.P.M. (mechanical action) measured by the Tacho. When the damper is shut there is a fall in air pressure/density to the supply side of the fan. When the damper is open the density/supply pressure of the air to the fan increases. This means that if the M.M. is to tightly control and monitor the air component of the fuel/air ratio the M.M. and Inverter Interface must “learn” every combination of damper opening as an angular function and motor speed so that the slip in any combination of these two variables is measured and known. In this way the M.M. can inflict close control and monitoring of the air component into the system.

The Improved/New Control Philosophy EPROM 4.02

The new control philosophy will be additional to the existing and will not interfere with the integrity of the presently approved control philosophy.

A 485 data communication line is connected between the M.M. and the Inverter Interface. In this way the Inverter Interface module will be continually updated with the exact status of the M.M., i.e. Purge, Run, Commission, etc. In this way it will be possible for the Inverter Interface to learn and remember the slip component for any motor speed/air damper position combination.

When the M.M. is commissioned the commissioning status is passed to the Inverter Interface and all of the positions for fuel/air ratio that are entered into the M.M. during the commissioning process are passed to the Inverter Interface. These positions are stored together with a motor speed air damper position. This allows the Inverter Interface to measure the slip by measuring output signal to the Inverter, return signal to the tacho. and learning the difference for any air position/motor speed setting. This improved control form also gives the facility for a different combination of air/motor speed settings to be accommodated for varying fuels, i.e. F1, F2, F3. This facility accommodates variances for air requirement for different fuels which are fundamental to the hydrocarbon ratio of the fuel.

A diagram showing Slip is shown over.

Diagram to show Increase in Slip Caused by Damper Sited on Inlet to Combustion Fan
(Caused by pressure/density variations that fan operates in as a function of its position in load index).

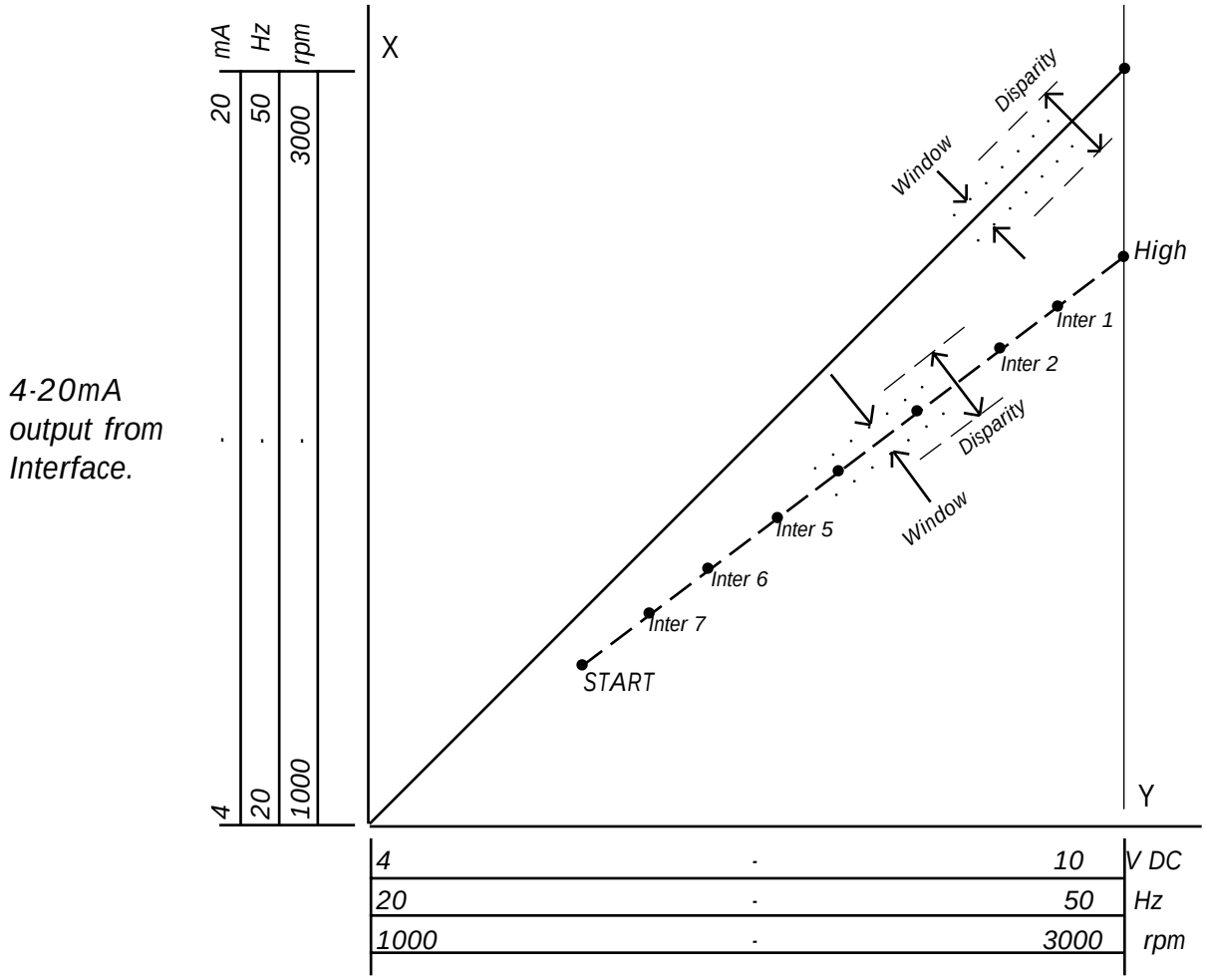

— — — — *Actual Feed back signal*
———— *Expected Feed back signal*

An inverter interface fitted with EPROM 4.02 can be used with a Mk4 or Mk.5 M.M.. An additional data link connection must be made between the M.M. and the Inverter Interface. The data link connections at the M.M. end share the same terminals as the E.G.A. data link. Refer to Drawing No. 2215. If using a Mk4 M.M. it must be fitted with EPROM 240/34/15/5 (or later). If using a Mk.5 then EPROM 300/0/15/2 (or later) must be fitted. Parameter 20 must be set to value 1.

During operation the M.M. sends various commands and status information to the Inverter Interface. During commissioning, each time a position is entered (HIGH/INTER/START) the interface stores the feedback signal value. When the START (low flame) position is entered these values are stored permanently in the interface. A set of values can be stored for each fuel (2 fuels on a MK4, 3 on a Mk5). When the M.M. is in the RUN mode the set of values stored for the fuel presently selected is used to generate the window and disparity error checking bands. In commissioning mode error checking is disabled. During run the error checking is disabled during the start up cycle. If the interface does not hold a valid curve for the fuel presently selected or PARAMETER 20 = 0 then operation reverts to the 'straight line' method.

The window and disparity bands have been increased on EPROM 4.02. The window to 10 units, the disparity to 15 units. Here units is used in terms of the value displayed on the test data output representing the signal value on the interface input; 0-20 mA → 0-255; 0-10Volts DC → 0-255. For an inverter set at maximum 50Hz this represents ± 2 Hz for the window , ± 3 Hz for disparity.

Three sets of test output data are displayed. Details are listed below. During commissioning mode at the beginning of each line the point being entered is shown. (CLOSE,OPEN,HIGH...)

To view this data a special test lead (Pt. No. DTI20019) is required to connect the Interface to a P.C. The communication format is 4800 baud, no parity, 8 data bits, 2 stop bits.

Test Output Data:

RUN mode
S4+ = 0V AC

a. a is the signal value on 1+, 1-/0V, +V inputs; range 0-255.
b. b is the reading at low rpm, range 0-255.
c. c is the reading at high rpm, range 0-255.
d. d is a count value: The value is initially 000. When S4+ goes from 0V AC to 220V AC the value increases. If 350 is reached then the IIF will generate an error condition. It takes 40 seconds for the count to reach 350. 40 seconds is the time allowed for the start up sequence. Void if I =001.
e. e indicates the status of the S4+ input. 000 = 0V AC, 001 = 220V AC.
f. f is the error number of the last error condition that occurred.
I. If I = 001 this indicates that Parameter 20 = 1 and a valid curve has been programmed. If Parameter 20 = 0 or the curve has not been programmed then 000 is displayed (“straight line” operation).

RUN Mode
S4+ = 230V AC.:

g. g is the signal value on 1+,1-/0V, +V inputs range 0-255. (Same as a.).
h. h is the expected value on g.
i. If the signal g goes outside the window into the disparity, then this value is set to 30 and counts down to 0. If the signal go goes back into the window then this value is set directly back to 0. 10 counts = 1 second. The signal g is allowed to be in the disparity for 3 seconds.
j. If the signal g is outside the disparity, this value is set to 10 and counts down to 0. If the signal g goes back into the window/disparity then this value is set directly back to 0. 10 counts = 1 second. The signal g is allowed to be outside the disparity for 1 second.
k. k indicates the status of the S4+ input. 000 = 0V AC, 001 = 220V AC. (Same as e.)

COMMISSIONING Mode.

m. m is the input signal value on 1+, 1-/0V, +V inputs. Range = 0-255 (same as a.).
n. n is a digital value generated in the Inverter Interface. As each point is entered it is stored alongside value m. (Autoflame use for diagnostic purposes).
o. Value of m stored for previous point entered.
p. Value of n stored for previous point entered.
q. If I = 001 this indicates that Parameter 20 = 1 and a valid curve has been programmed. If Parameter 20 = 0 or the curve has not been programmed then 000 is displayed ("straight line" operation).

If the IIF generates an error condition the test data output stops so that the events leading up to the error can be analysed. The IIF has to be powered down and up quickly in order to see the error number that has just occurred.

Error Numbers

1. Start up sequence not complete in 40 seconds.
3. Signal "g" in disparity for 3 seconds.
4. Signal "g" outside disparity for 1 second.
5. Wiper (w) value output error (Electronics fault).
6. Analogue to digital converter faults (Electronics fault).
7. S4+/S4- inputs not inverse of each other.
10. EPROM Check Error. (Electronics fault).
11. RAM Check Error. (Electronics fault).

Any other error number void.

During commissioning ensure that the value of m.) for Inter 1 is less than the HIGH position value of m.). Similarly each subsequent value of m.) entered must be less than the value entered immediately before. It is recommended that values o.) and p.) are recorded for each point entered as part of the commissioning data for the system.

After commissioning is complete the engineer must run the burner from low to high fire and check that the output values g.) and h.) are correct and that no M.M. errors occur.

5.1.11 Installation Precautions

The reliability of the equipment may be impaired if used in environments where strong electro magnetic fields exist. If for example the equipment is installed in a boiler house at the top of a high rise building where radio systems exist then additional EMC (Electro Magnetic Compatability) measures may have to be considered

INTERCONNECTION DIAGRAM FOR APPLICATION TO CONVERT O2 AND TEMPERATURE SIGNALS FOR USE WITH MM VIA O2 INTERFACE MODULE

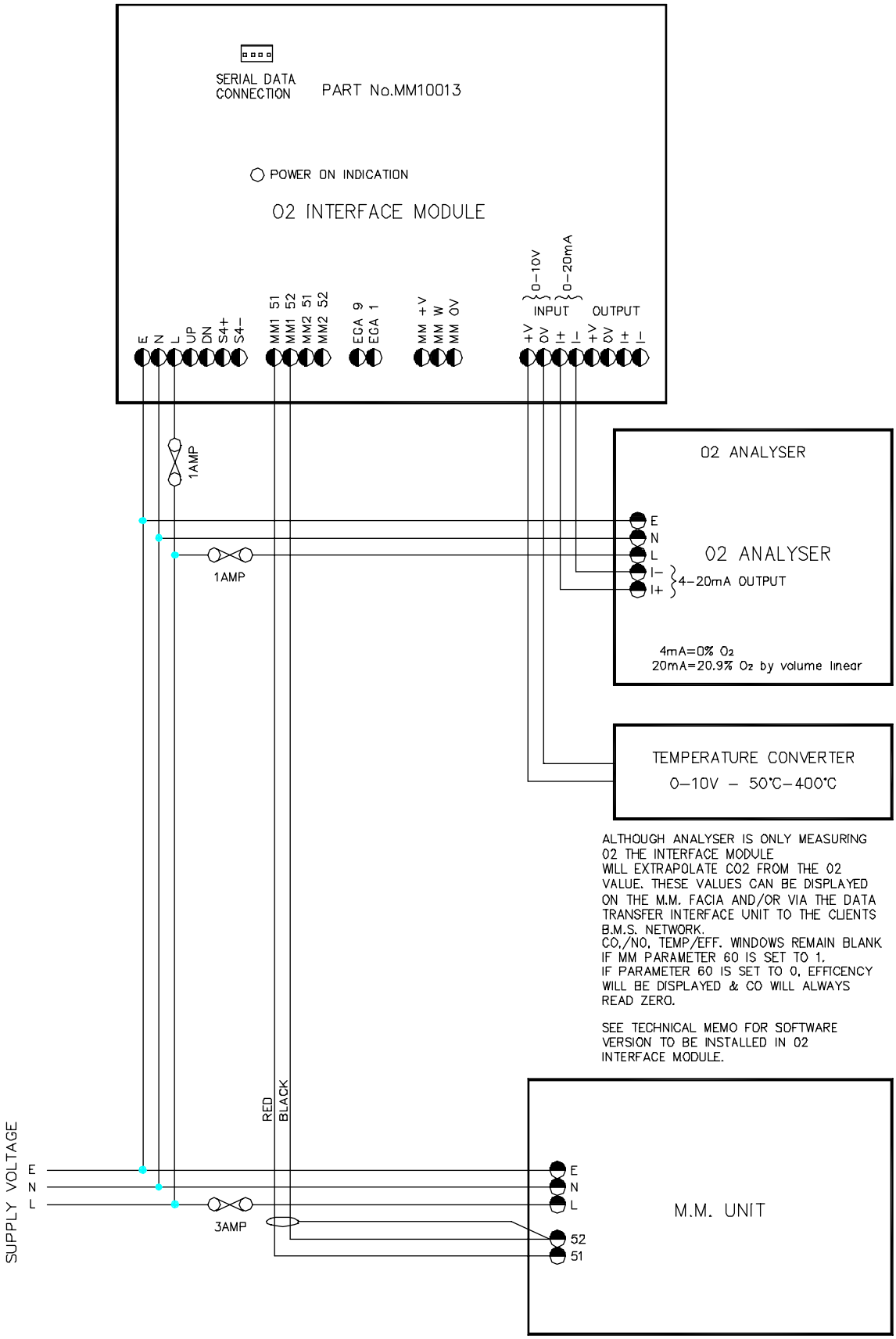

6:7:99/3059/TF

INTERCONNECTIONS BETWEEN TWO M.M. MODULES & ONE E.G.A. UNIT VIA THE SPLITTER INTERFACE MODULE

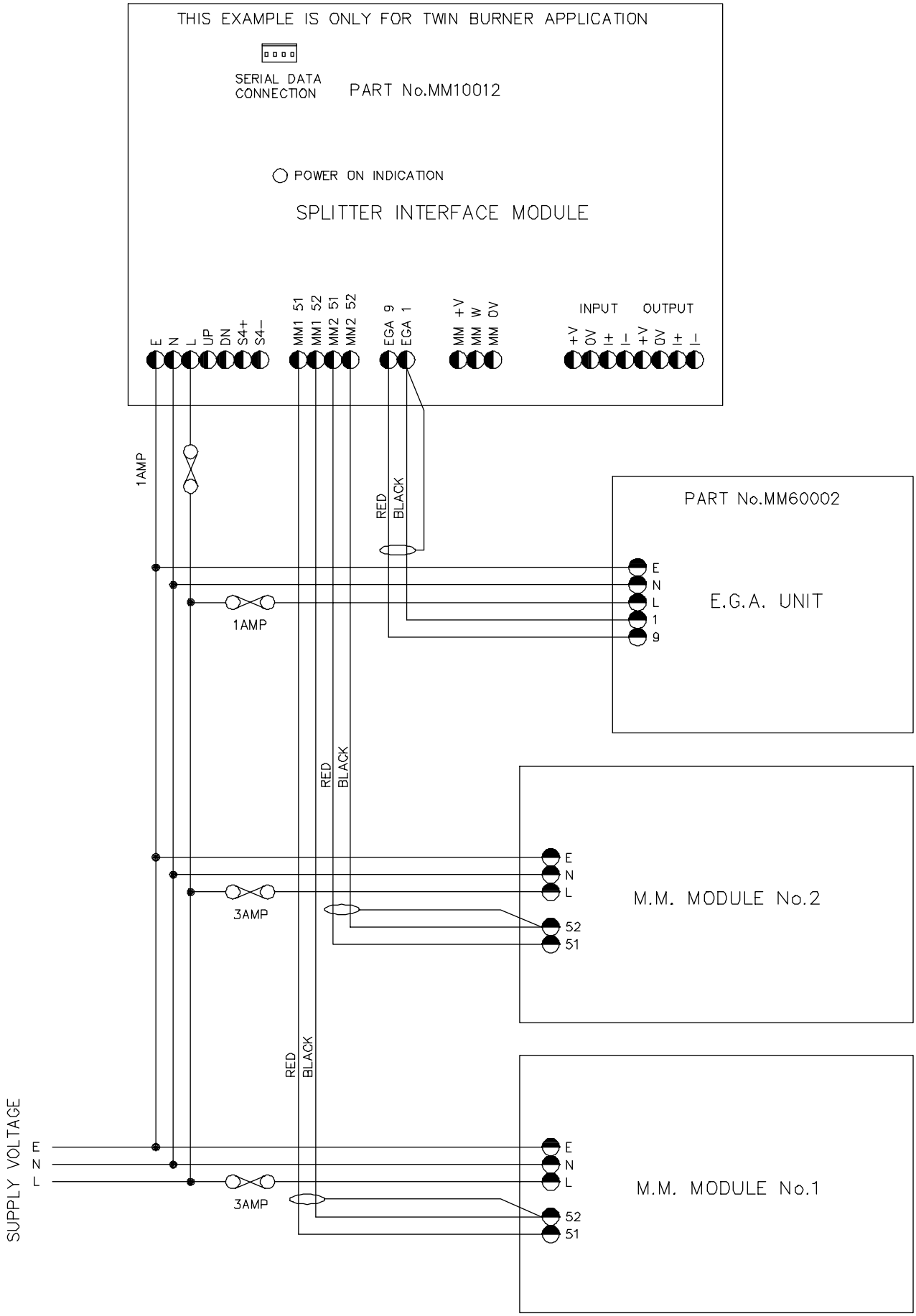

Section 6: D.T.I. Data Transfer Interface

6.1 DTI MODULE

6.2 INFORMATION AVAILABLE FROM THE DTI

DTI Information:

Values available from each MM :

Required boiler temperature (deg. C) or pressure (Bar).
Actual boiler temperature (deg. C) or pressure (Bar).
Burner on/off (CR relay on/off status).
Burner maximum firing rate.
Burner firing rate (%).
Fuel selected.
Control detector type (temperature/pressure).
Error conditions.
Low flame hold operation.
Hand operation.
Channel 1-Channel 8, CH1-CH8 Positioning Motors (Angular Deg.)
Maximum set point accepted from DTI.
Minimum set point accepted from DTI.
Lead boiler status.
Burner firing status (off, firing, purge, ignition).
Sequencing optioned.
Sequence status (on, stand-by, warm, off).
Enabled/disabled status.

EGA Information:

EGA operation optioned.
Flue gas oxygen present value.
Flue gas carbon dioxide present value.
Flue gas carbon monoxide (unburnt combustibles) present value.
Flue gas exhaust temperature present value.
Combustion efficiency present value.
Flue gas oxygen commission value.
Flue gas carbon dioxide commission value.
Flue gas carbon monoxide (unburnt combustibles) commission value.
Flue gas exhaust temperature commission value.
Combustion efficiency commission value.
EGA error conditions.

DTI Input values:

Change set point.
Select lead boiler.

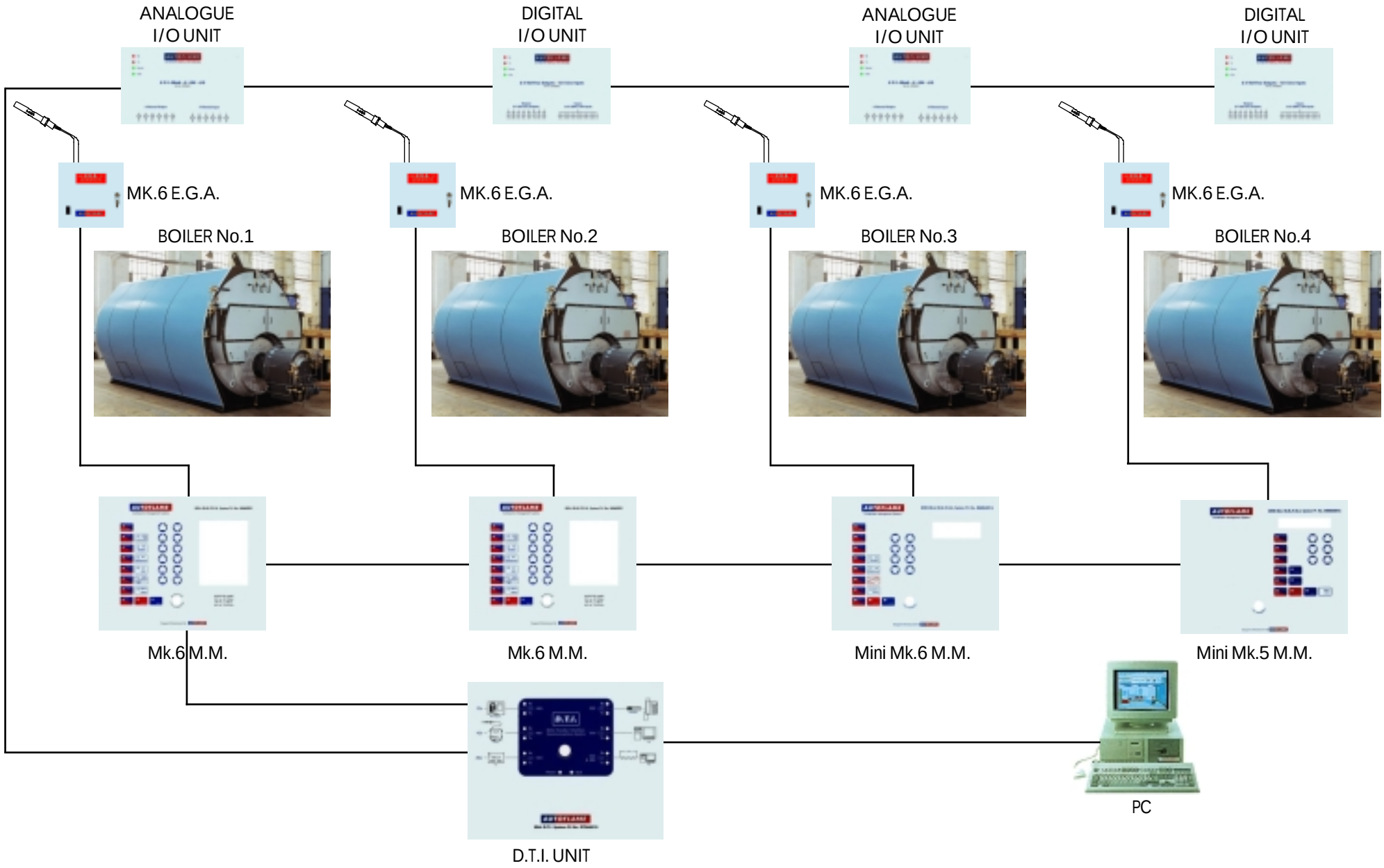
ANALOGUE I/O UNIT
DIGITAL I/O UNIT
ANALOGUE I/O UNIT
DIGITAL I/O UNIT
MK.6 E.G.A.
MK.6 E.G.A.
MK.6 E.G.A.
MK.6 E.G.A.
BOILER No.1
BOILER No.2
BOILER No.3
BOILER No.4
Mk.6 M.M.
Mk.6 M.M.
Mini Mk.6 M.M.
Mini Mk.5 M.M.
PC
D.T.I. UNIT

D.T.I. Data Transfer Interface

Multi Kiln Special System Application Example

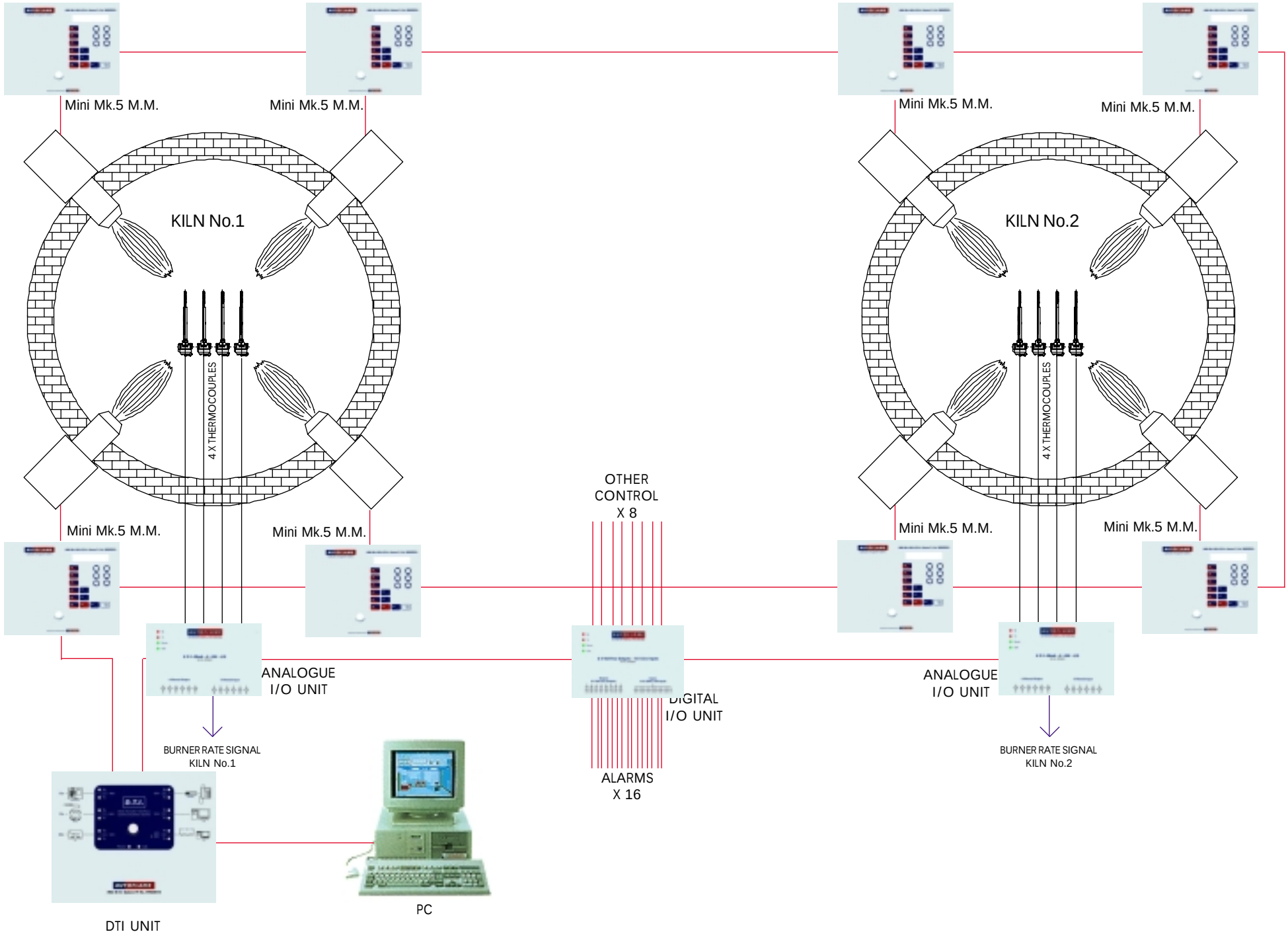

6.5 FRONT FACIA LAYOUT

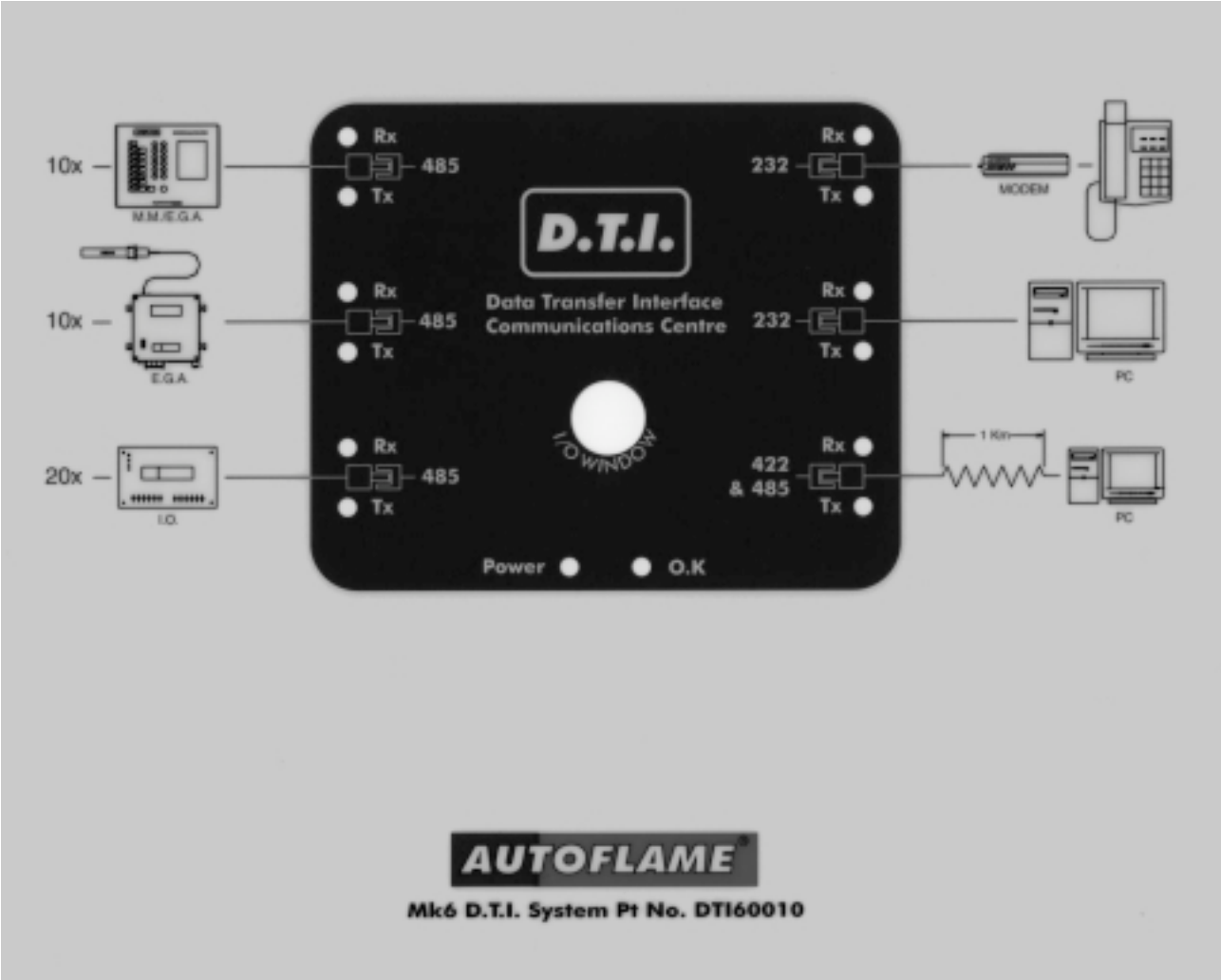

6.7 INPUT/OUTPUT SYSTEM CAPABILITIES

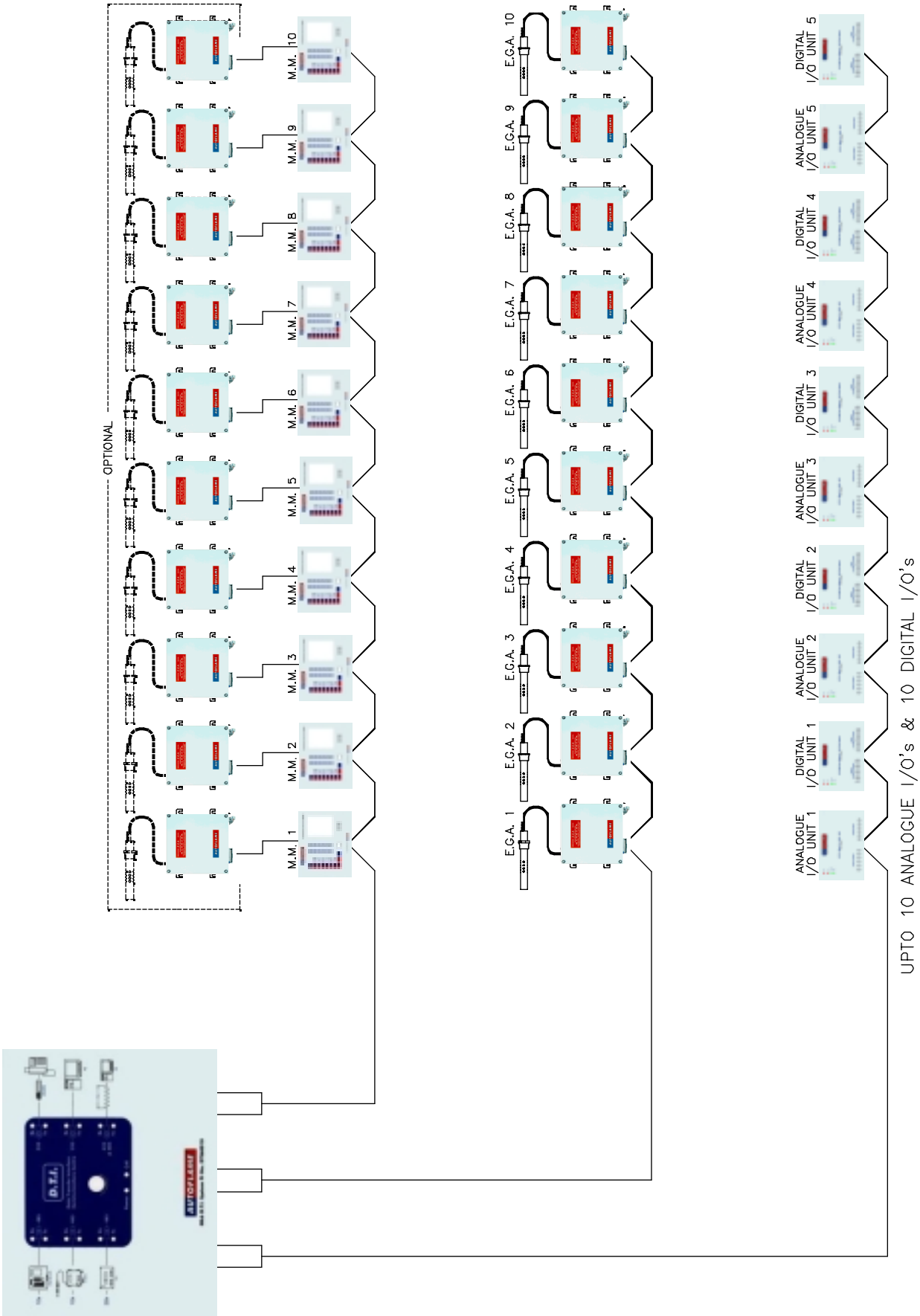

6.8 COMMUNICATION INTERFACE SCHEMATIC SYSTEM CAPABILITIES

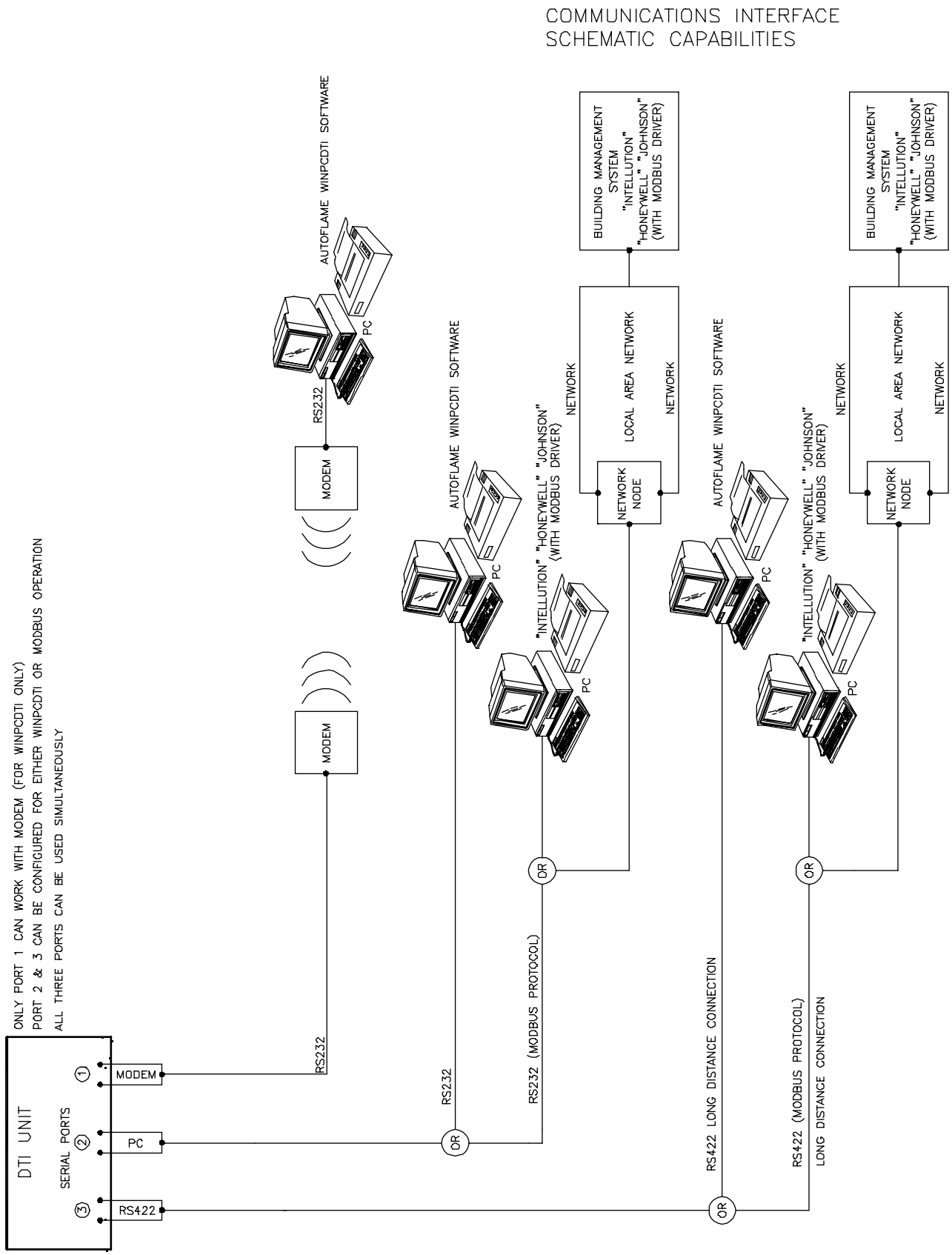

30:08:00/4281/T.F.

6.9 WIRING CONNECTION TERMINALS DIAGRAM

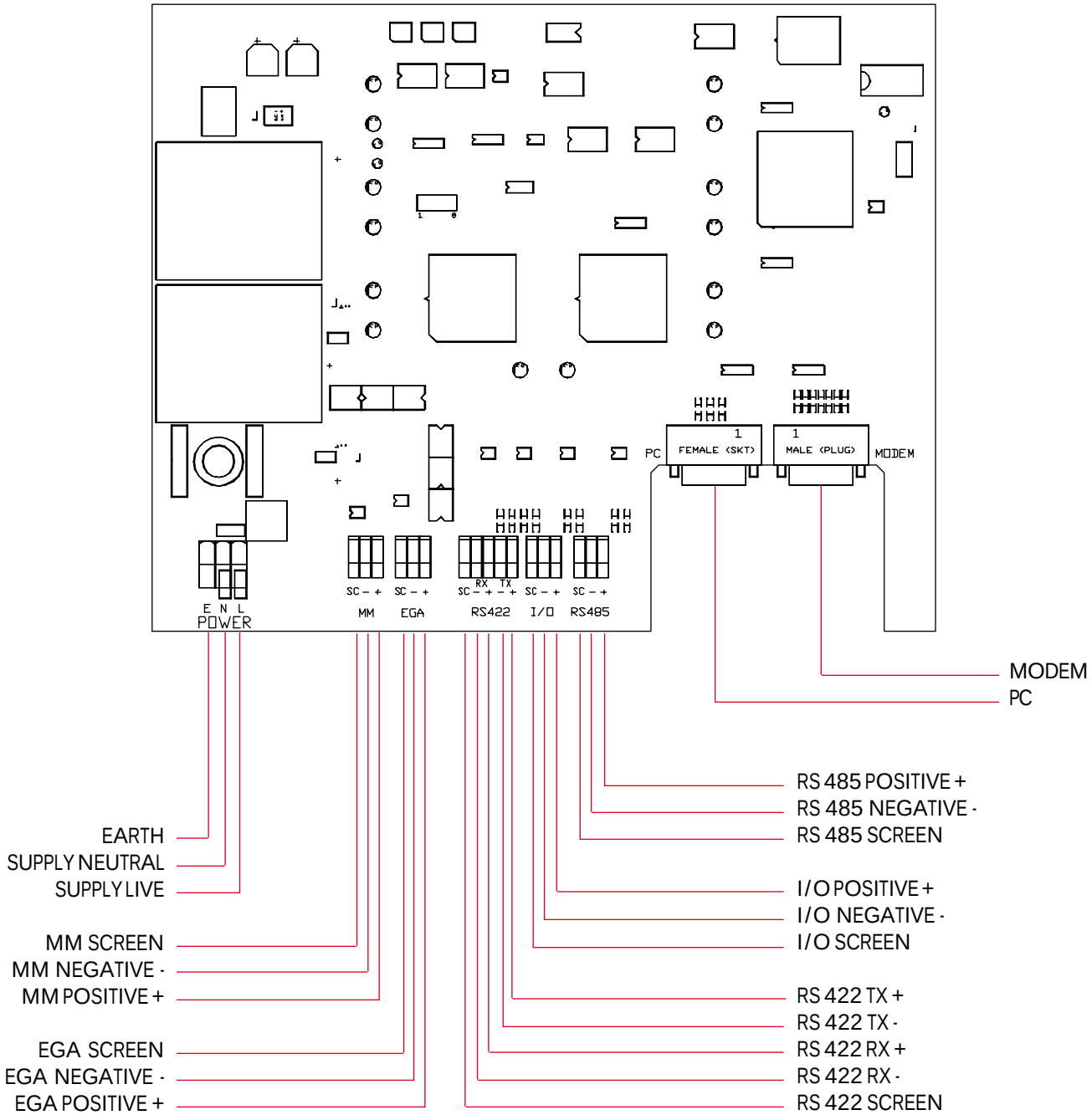

6.10 DTI FIXING HOLES AND DIMENSIONS

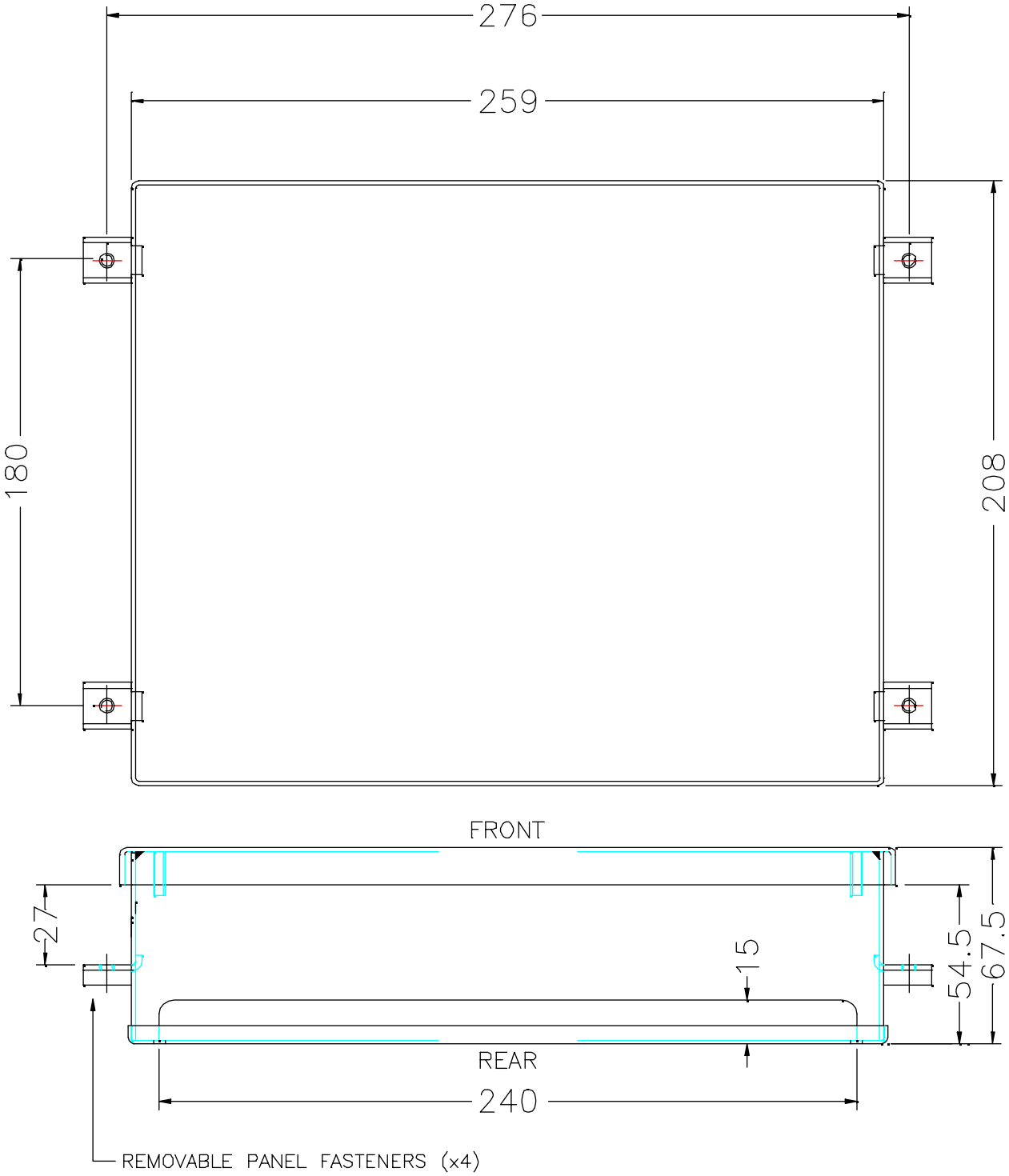

6.11 DTI INTERCONNECTIONS

6.11.1 MM Modules (MM/EGA)

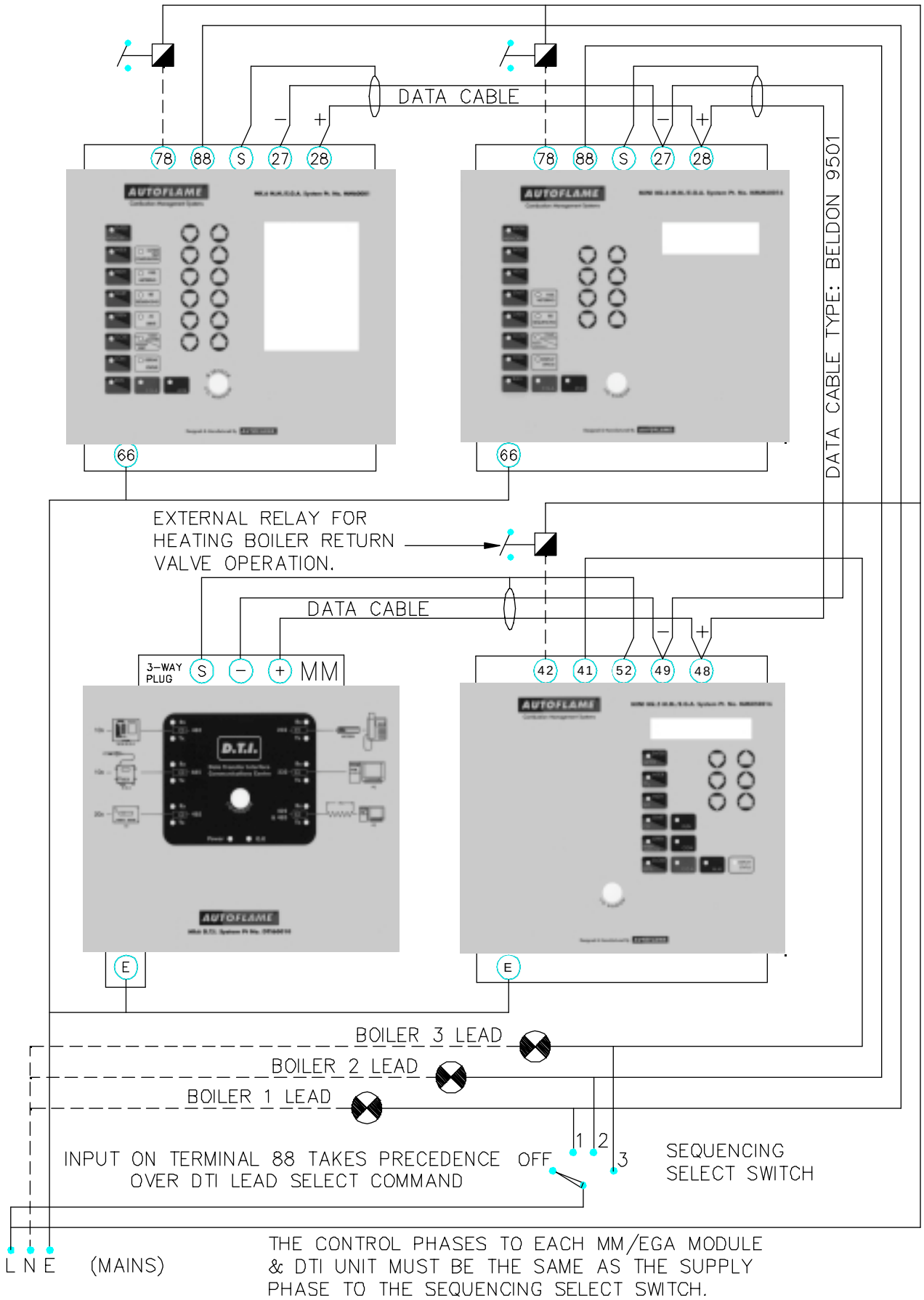

6.11.2 EGA Modules (Standalone EGA)

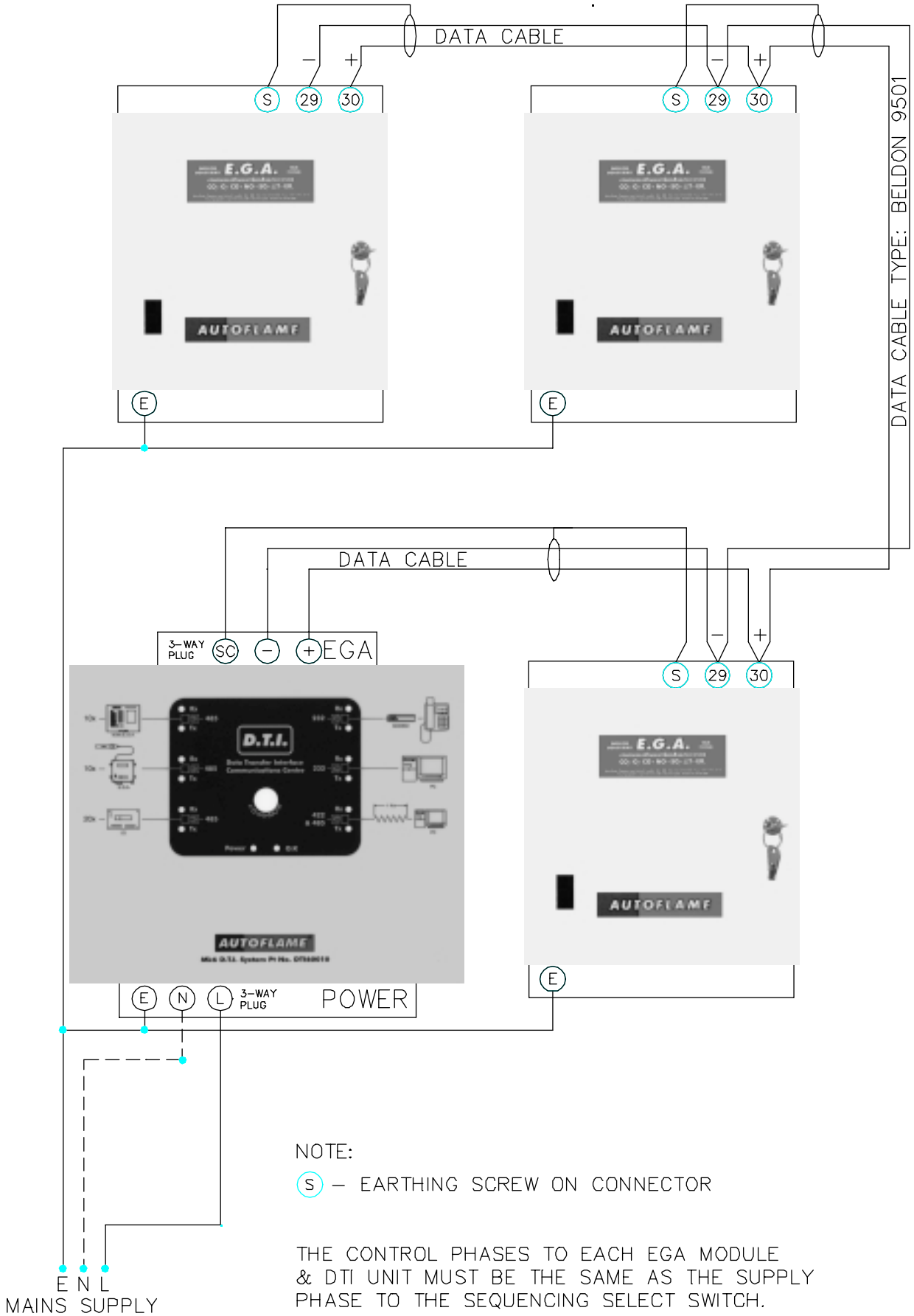

6.12 PCB SWITCH SETTINGS

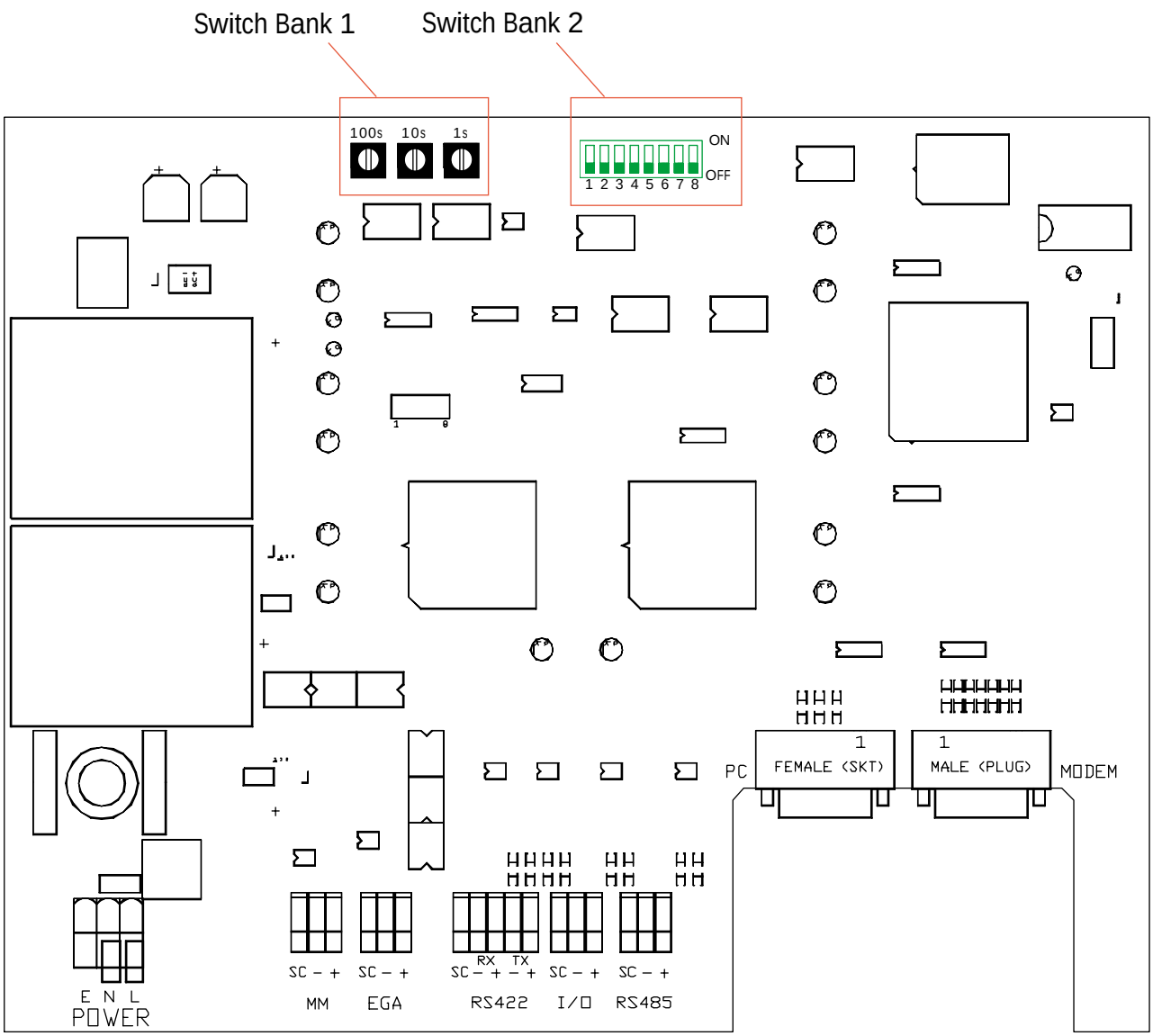

Standard DTI - when used with WinPCDTI Software

Switch Bank 1 - not relevant, set to 001

Switch Bank 2 - ways 1 to 7 all set to off

Way 8 MM Port Baud Rate
off - 9600 (Mk6, Mini Mk6 and Mini Mk5 MMs)
on - 4800 (Older Mk5 and Mini MMs)*

* Technical Memo: Data Communication Compatibility 3/9/1999

Settings for switch banks 1 & 2 may be different if the DTI is used for both WinPCDTI and Modbus/ Metasys operation. See sections 6.17.6 and 6.21.3.

6.12.1 To Restore Factory Settings

This procedure clears all congifuration data in the DTI and sets it back to default settings. (Configuration data includes, for example, alarm trigger conditions and labels).

Procedure

Switch Bank 1

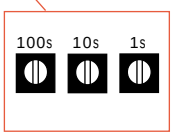

1. Power off the unit.

2. Set Switch Bank 1 address value to 789:
   100s = 7
   10s = 8
   1s = 9

   (Switch Bank 2 settings are irrelevant).

3. Power up.

4. Wait until the I/O transmit LED flashes (approx. 25 seconds)

5. Power off.

6. Set switches back to the required operational settings.

7. Power on unit.

6.13 DTI, PC AND MODEM INTERCONNECTIONS

Connection between PC and DTI RS-232 MODEM port

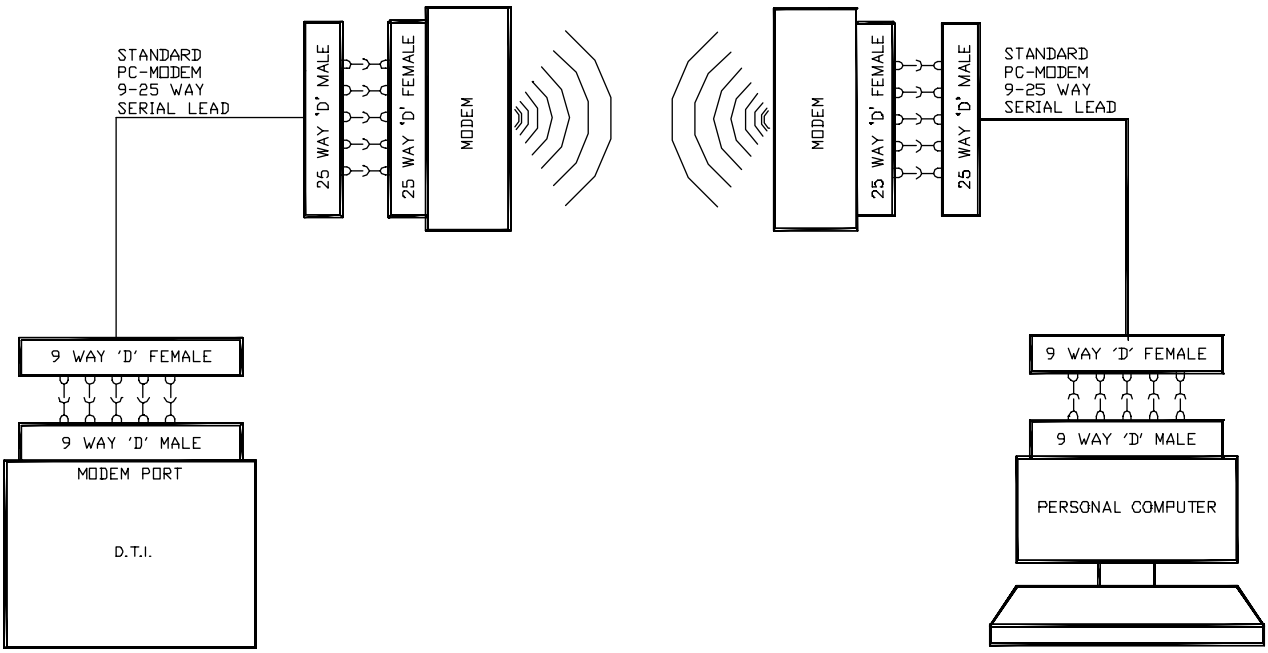

Connection between PC and DTI RS-422 port

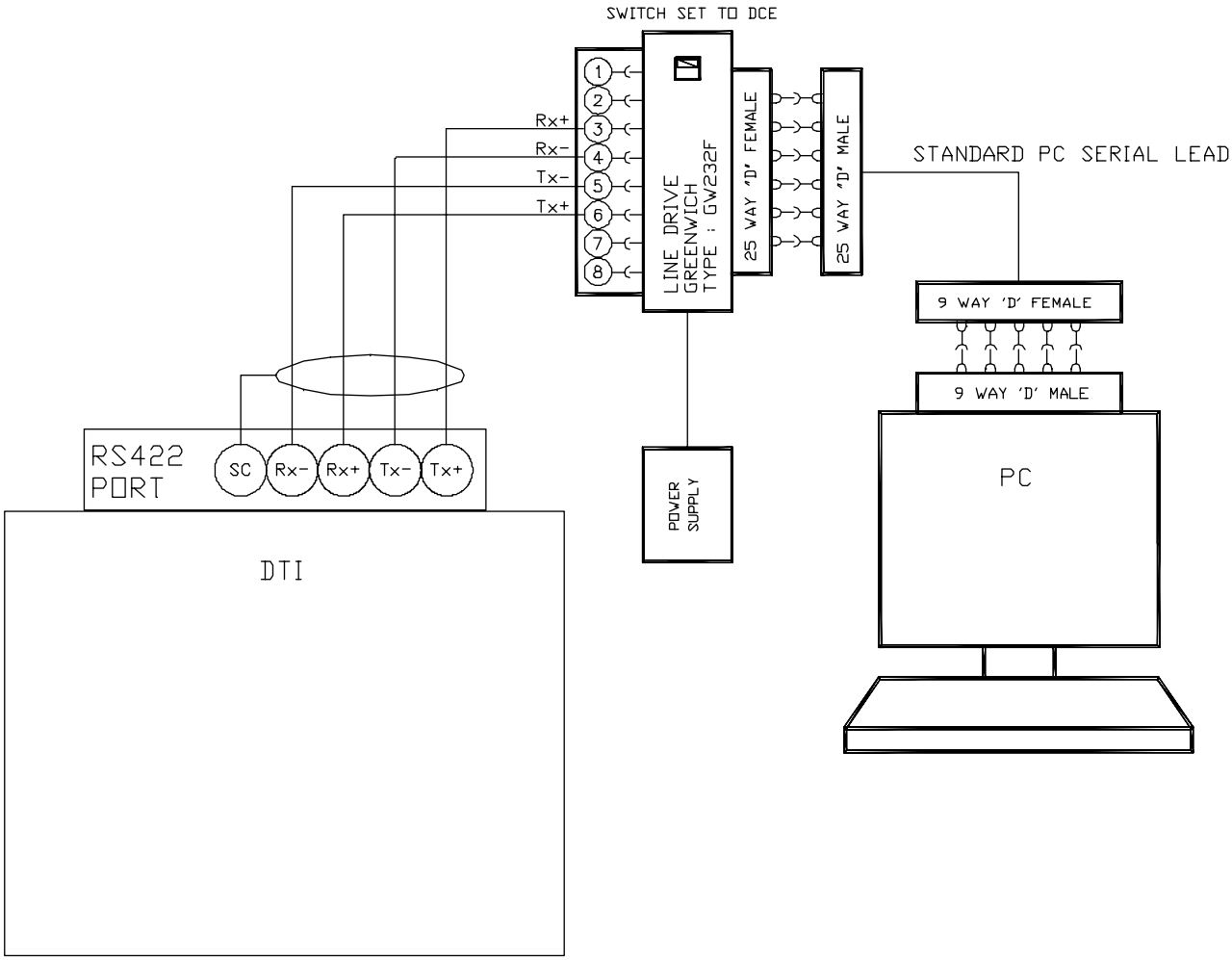

Direct connection between PC and DTI RS-232 PC port

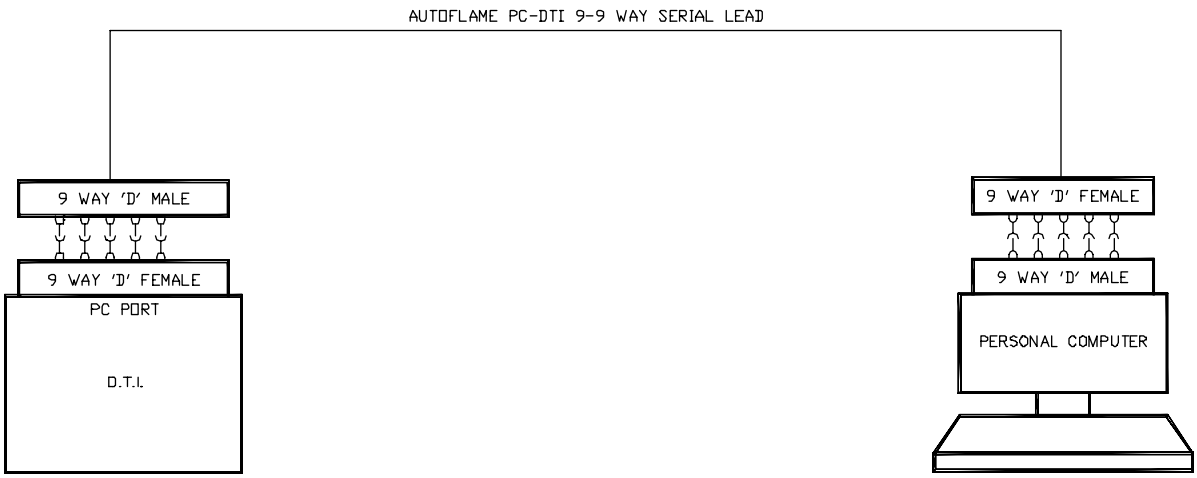

PC-DTI Cable

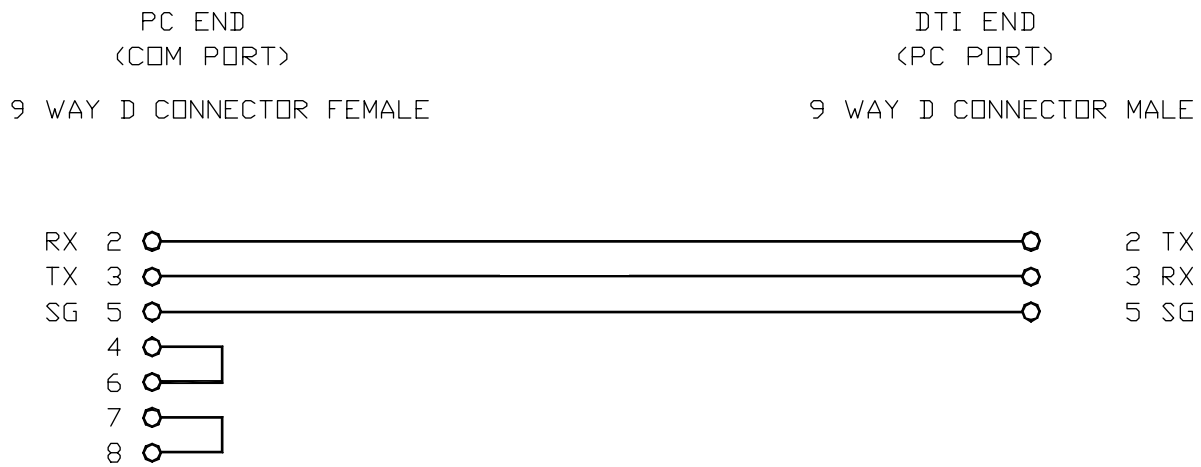

Section 6.14: Analogue Input/Output Module Index

6.14.1 Introduction , Features and Benefits

This unit has 6 analogue inputs and 6 analogue outputs. Each analog input can be individually configured for 0-10 Volts, 0-20milliamps or 4-20 milliamps. Each analog output can be individually configured for 0-10 Volts or 4-20 milliamps. The unit is primarily for use with a Data Transfer Interface (DTI) unit. It can also be used in conjunction with most MM units to convert MM items of data to analogue outputs. Before operation the unit must be setup for its particular modes of operation by means of a serial port and a personal computer (emulating a terminal - e.g. Windows Hyperterminal). Each analog input and output must also have a jumper set to select voltage or current operation.

When used with a DTI up to 10 analogue input/output units can be linked together. As well as the actual analogue inputs and outputs being configurable, the data range for each input and output can also be individually set. Text labels can also be assigned to each input and output. The latter items (data range / text labels) can be of use when the DTI is being used for a building management system or programmable logic controller type interface. However, in the vast majority of cases, these setups can be left as supplied. Refer to DTI manual for interconnections between the Analogue I/O unit & the DTI.

An external PSU is not required for the analogue outputs. The maximum permissable load on each analogue output is 250Ω. All the negative terminals are common to each other. The analogue outputs as a whole are isolated.

6.14.2 Facia Layout and Internal Connections

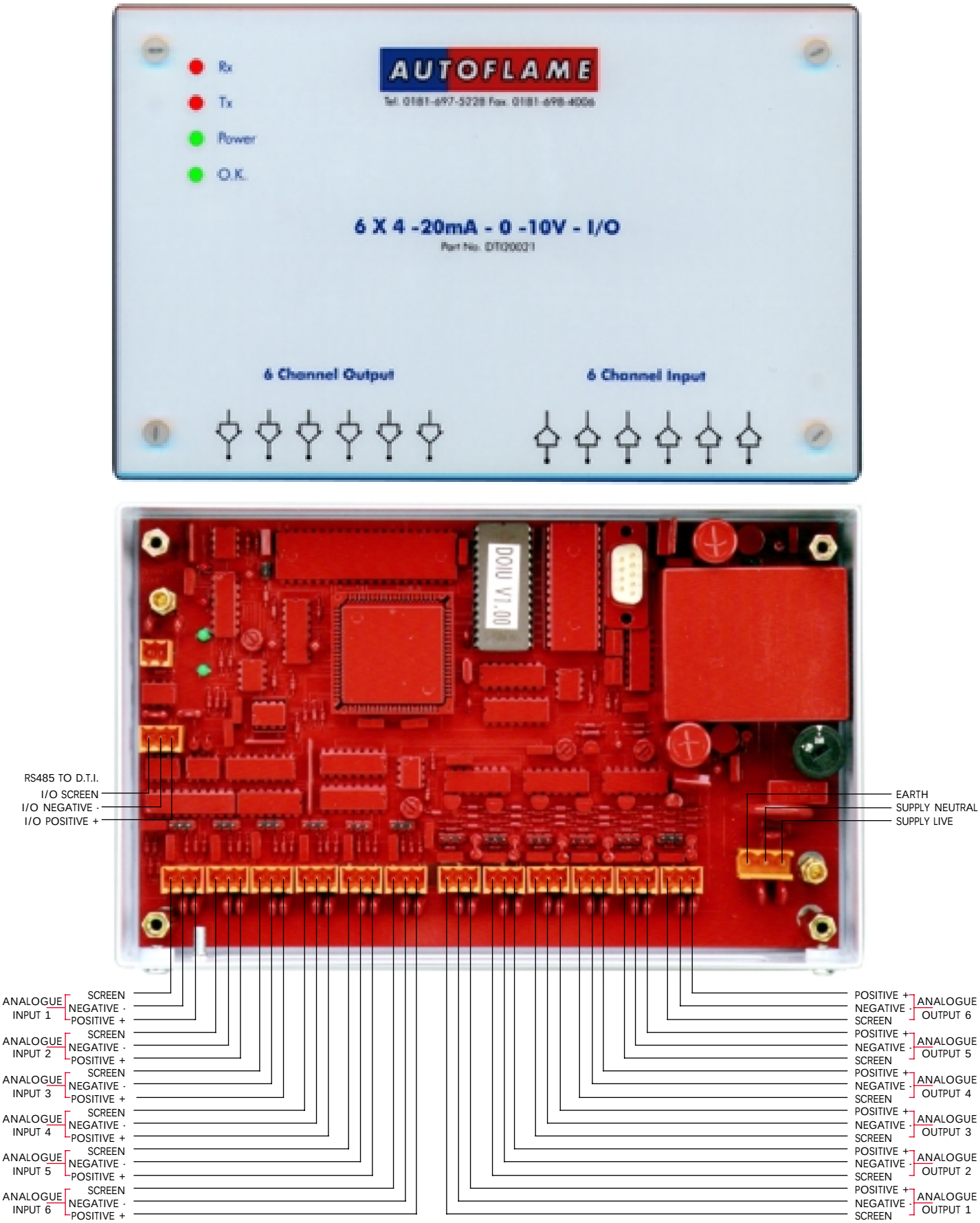

N.B. All Negative connections are common to each other.

6.14.3 Setup Configuration for direct connection to M.M. unit

SETUP

To configure the unit connect a pc serial port to the setup port (use the Autoflame I/O setup lead). The pc must be running a terminal emulation program with the transmit and receive parameters set as follows:

Baud rate:	4800
Data bits	8
Parity	none
Stop bits	1

(Check the COM port is set to the one actually being used).

Pressing the <return> key should bring up the following opening message:

Analog I/O unit setup mode

Pressing the <ESC> key at any time during setup will cause exit from setup. If no keys are pressed for a period of approximately 5 minutes the unit will automatically exit from setup and revert to normal operation. During setup the unit will not carry out its normal functions. A test mode can be invoked during set up so the operation of the inputs and outputs can be checked. Every detail of the setup is not covered here as it is very repetitive. Experience can be quickly gained by working with an actual unit in setup mode. (Note that during normal operation if the PC is connected textual messages are displayed indicating communication between input/output units and the DTI).

If an existing setting is to be left unchanged then just press the <return> key.

The following shows samples of the various items that can be set. Text that is displayed on the screen is shown in bold.

Present input range for analog input 1 is A 0-10 volts

Ranges available

0 - 10 volts	**A**
0 - 20 milliamps	**B**
4 - 20 milliamps	**C**

Make new selection or <return>

This can be set for all 6 inputs. The appropriate link on the circuit board must be set for current/voltage. The link for each input is directly behind the 3 way terminal block.

Present mode of operation is with DTI
Press M to set MM mode or <return to proceed>

If DTI mode is selected, by just pressing <return> in this example, the following items are displayed

Address is currently set to 1

Press <return> or enter new address(1-10) then <return>:

the address must be set in sequence for each analog I/O unit. e.g. if there are 3 analogue I/O units on the system the first should be set address 1, the second to address 2, the third to address 3. Conflicts will occur if addresses are not set correctly.

Input number 1:-
Present label : Analog Input 1
Enter new label :
Up to 30 alpha numeric characters can be used for a label

Present low range digital value : 0
Enter new low range value :
This is the low data range value, it must be in the range 0-255

Present high range digital value : 255
Enter new high range value :
This is thehigh data range value, it must be in the range 0-255

The label, low range and high range values can be set for all 6 inputs and all 6 outputs. After the ouput 6 high range value the setup mode is exited and the following appears on the screen

SETUP TERMINATED !

operation will revert to normal.

If the MM mode of operation is selected then the following items are displayed

Firing rate	**A**
Required value	**B**
Actual value	**C**
Channel 1 position	**D**
Channel 2 position	**E**
Channel 3 position	**F**
Channel 4 position	**G**
MM error	**H**
EGA error	**I**
O2 value	**J**
CO2 value	**K**
CO value	**L**
NO value	**M**
SO2 value	**N**
Exhaust Temperature	**O**
Efficiency	**P**

Present selection for analogue output 1 is : A - Firing rate
Present low range value : 0
Present high range value : 100

if the <return> key is pressed the screen refreshes with the same display but for analogue output 2. If a selection is made then a low range value and a high range value are subsequently requested.
The low and high range values are values at which the output ranges itself from zero to span (ie 0-10 volts or 4-20 milliamps). After all 6 analog outputs have been covered the setup mode is automatically exited and the screen displays

SETUP TERMINATED !

It must be noted that the numeric values for the low and high range do not accept decimal points. If the value normally has a decimal point then the value should be entered without the decimal point. (e.g. for the channel 2 position, if the output was set to give 0-10 volts over 10.0 to 80.0 degrees then the low and high range should be entered as 100 and 800 respectively.

Configuration of MM when used directly with an Analogue I/O unit

If an analog I/O unit is connected directly to an MM to provide analog outputs, the first analogue input may be used to set the Required value. (Input channels 2 to 6 are of no relevance when the unit is used with an MM).

If the Required value is to be set by the channel 1 input then the following options/parameters should be set on the MM.

Option	16 = 2
Option	30 = lowest Required value
Option	31 = highest Required value
Option	33 = 1
Parameter	49 = 1

The channel 1 input can be configured for voltage/current as described in the earlier sections of the setup procedure.

On later versions of the Analogue I/O unit software (3.01 onwards) there is an additional set up to set the type of MM connected.

Example:

RS485 port baud rate is set at 9600 (Mk6, MiniMk6, MiniMk5)
Press 4 for to set to 4800 <return> to proceed.

Also on the later versions the following text is displayed when not in set up mode.

MM comms = nnn required value = nnn

MM comms increments each time the Analogue I/O unit receives data from the MM. Required value is the value that has been calculated for transmission back to the MM.

NB: Sequencing/D.T.I. and Analogue I/O unit cannot be used at the same time.

6.14.4 Front Facia Layout with LED Description

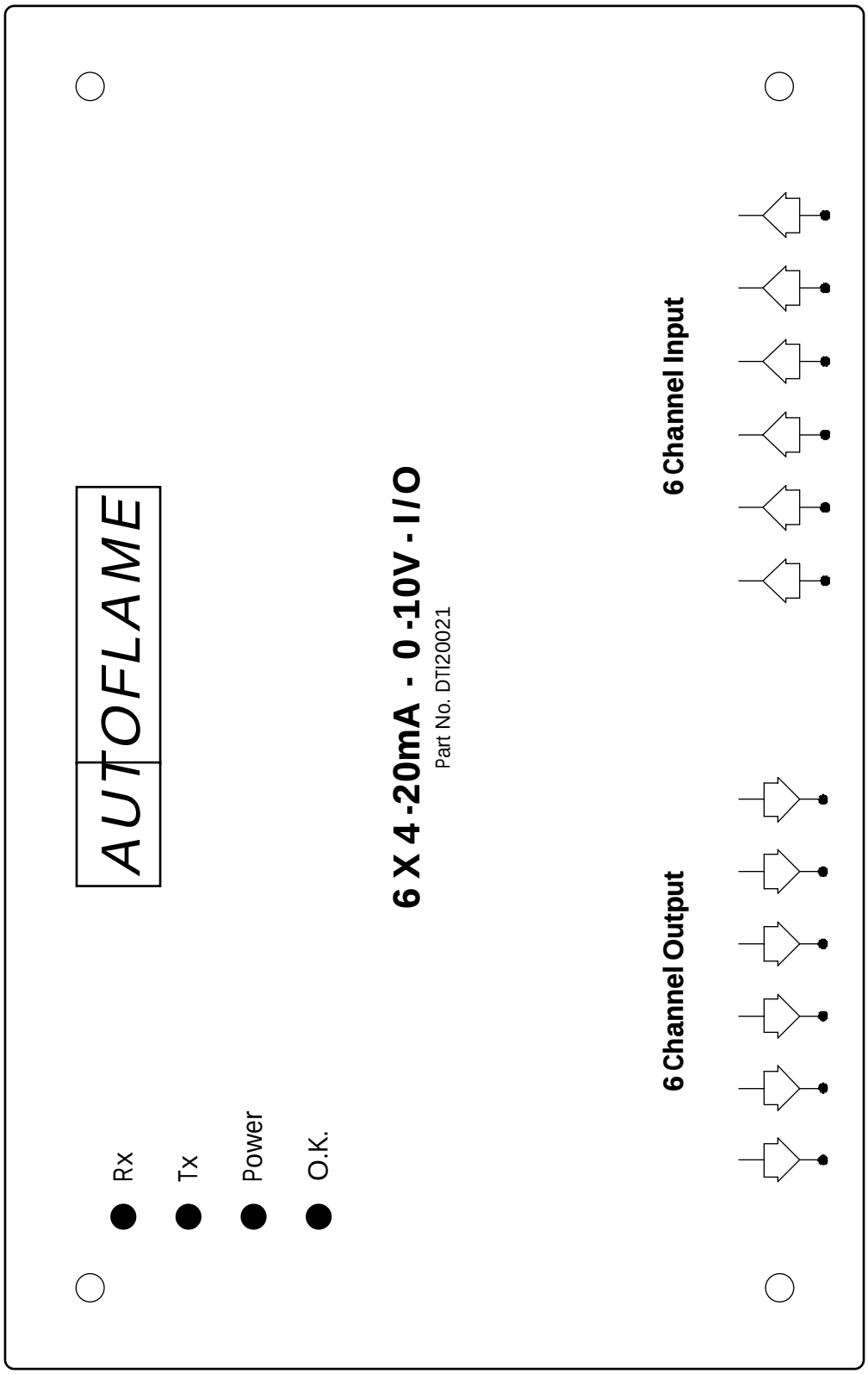

6.14.5 Fixing Holes & Dimensional Details

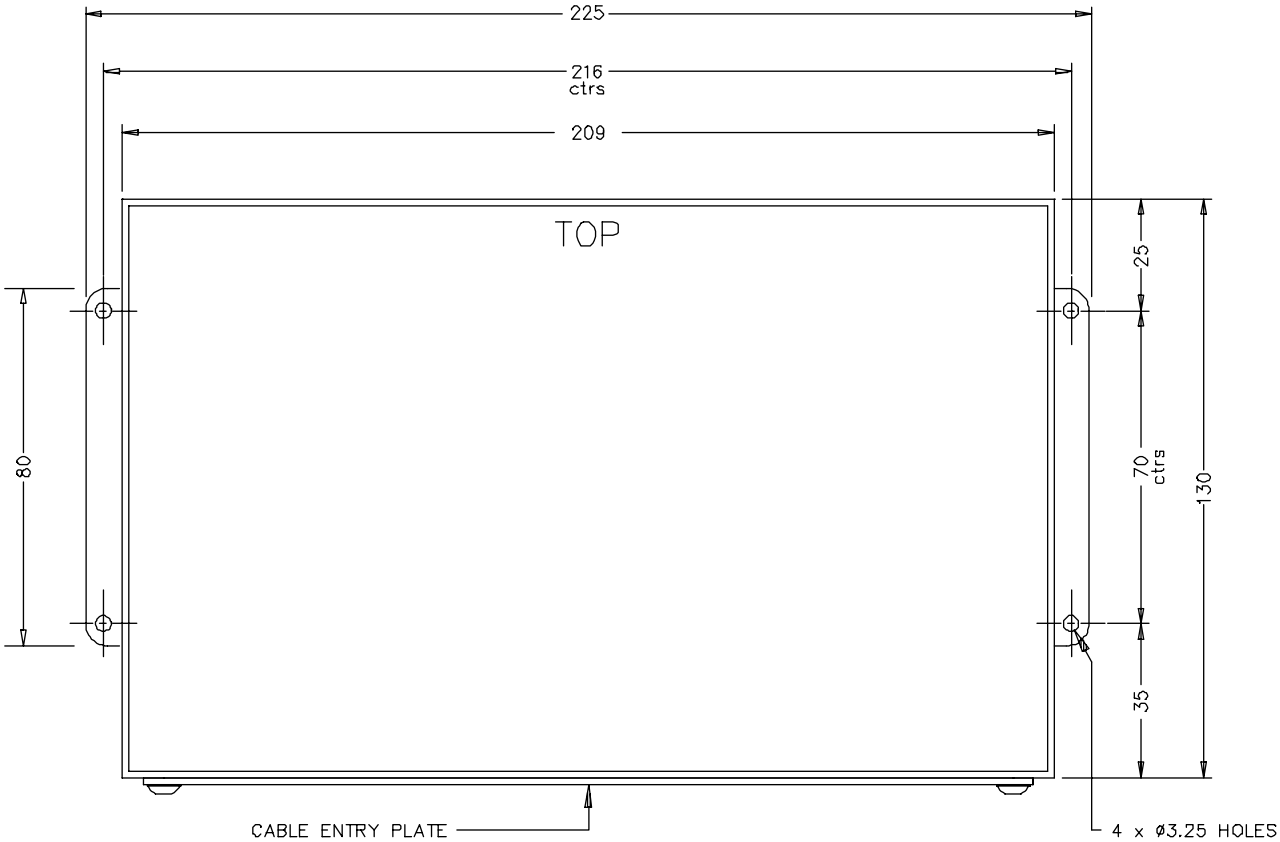

ALL DIMENSIONS IN MILLIMETRES

6.14.6 Wiring Connections Diagram

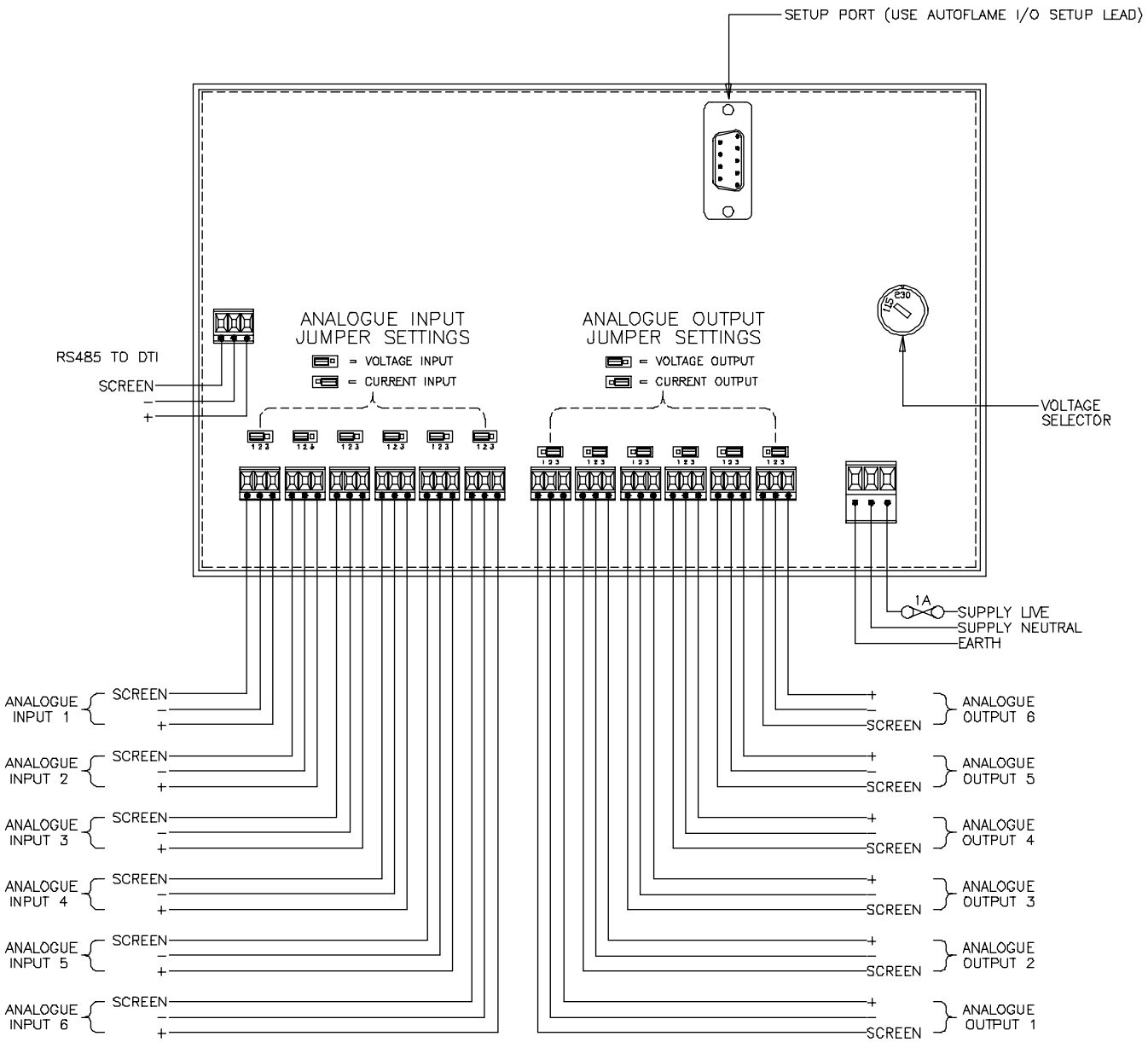

6.14.7 M.M. to Analogue Input/Output Unit Connection Diagram

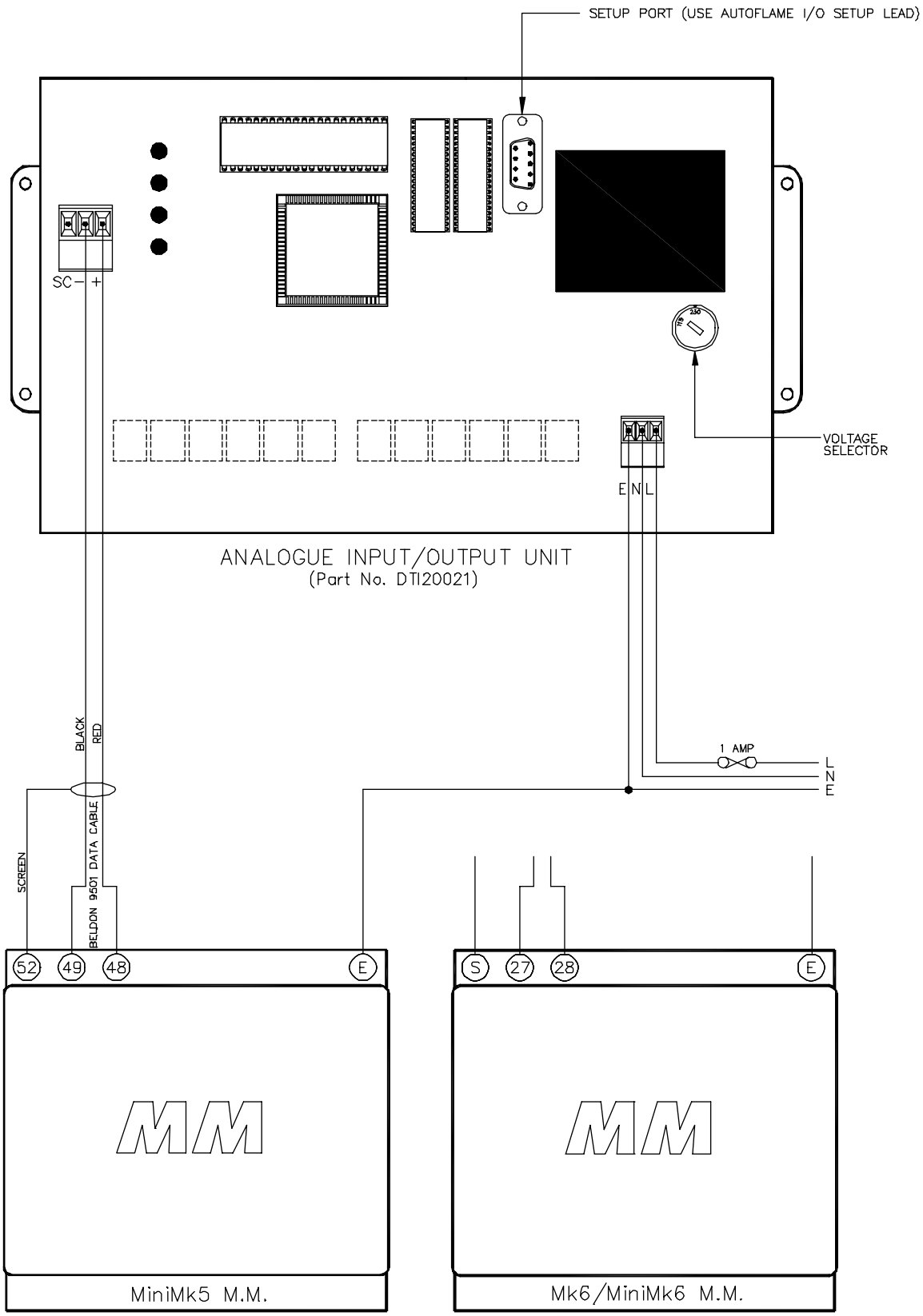

16:10:99/4318/TF

6.14.8 DTI to Analogue Input/Output Unit Connection Diagram

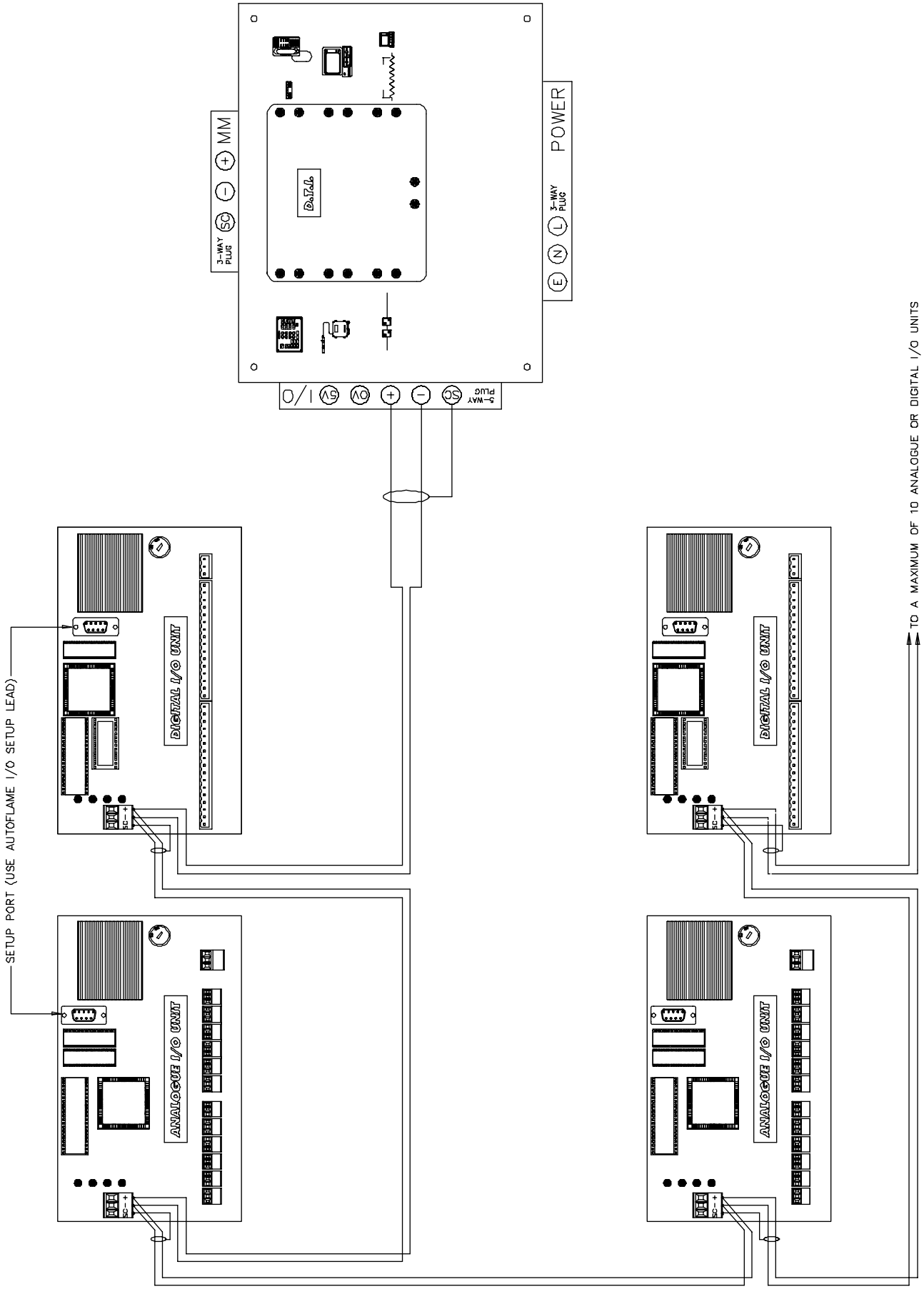

6.14.9 Application Example: M.M. unit to Analogue Input/Output Unit Direct Connection

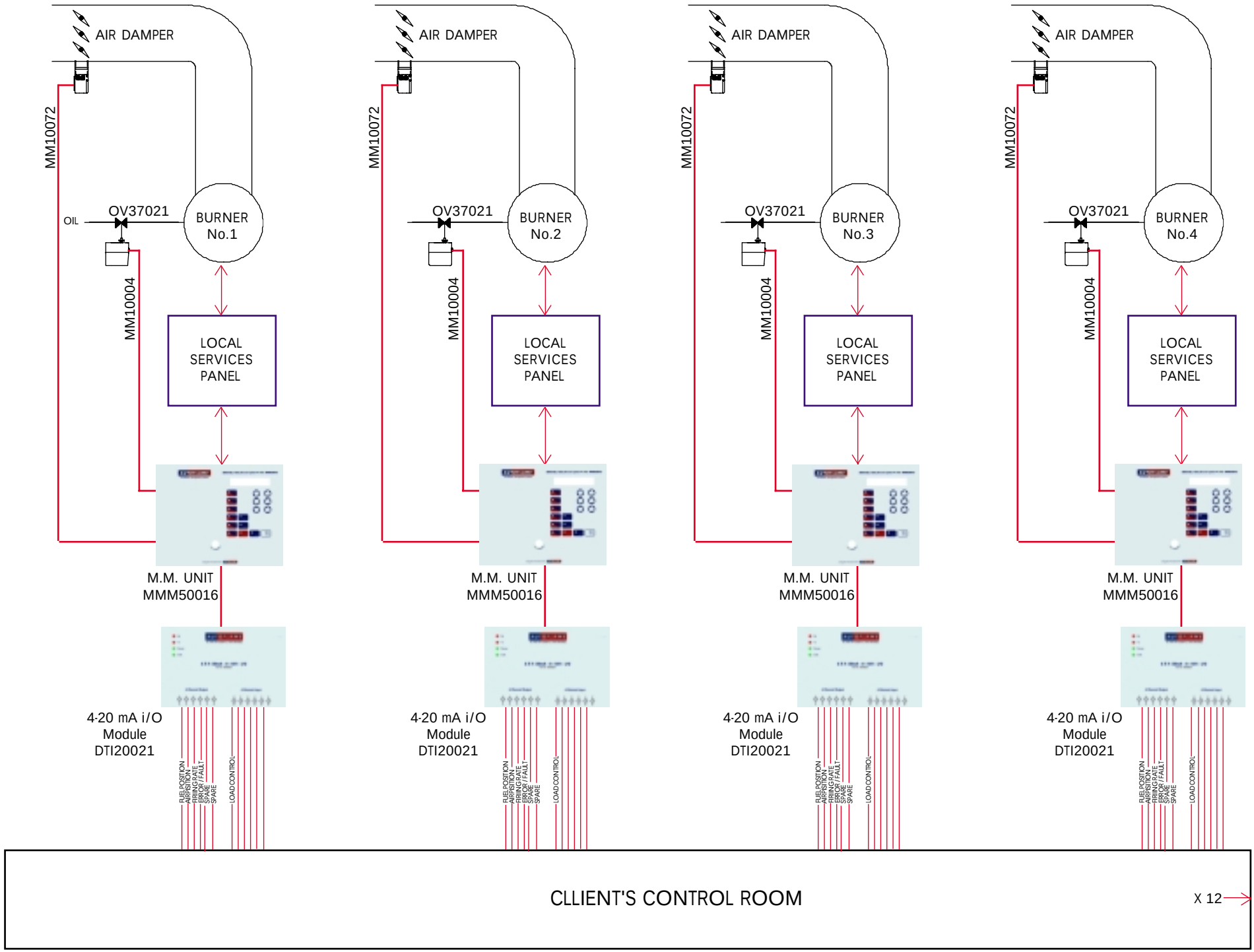

Section 6.15: Digital Input/Output Module Index

6.15.1 Introduction , Features and Benefits

This unit has 16 mains voltage inputs and 8 individual volt free mains voltage switches.
The unit is used in conjunction with a Data Transfer Interface (DTI) unit. Before operation the unit must be setup for operation by means of a serial port and a personal computer (emulating a terminal). A special lead supplied by Autoflame is required to connect the personnel computer to the unit. Up to 10 digital input/output units can be chained together.Text labels can also be assigned to each input and output. The latter items (data range / text labels) can be of use when the DTI is being used for a building management system or programmable logic controller type interface.
Refer to DTI manual for interconnections between the Analogue I/O unit & the DTI

6.15.2 Facia Layout and Internal Connections

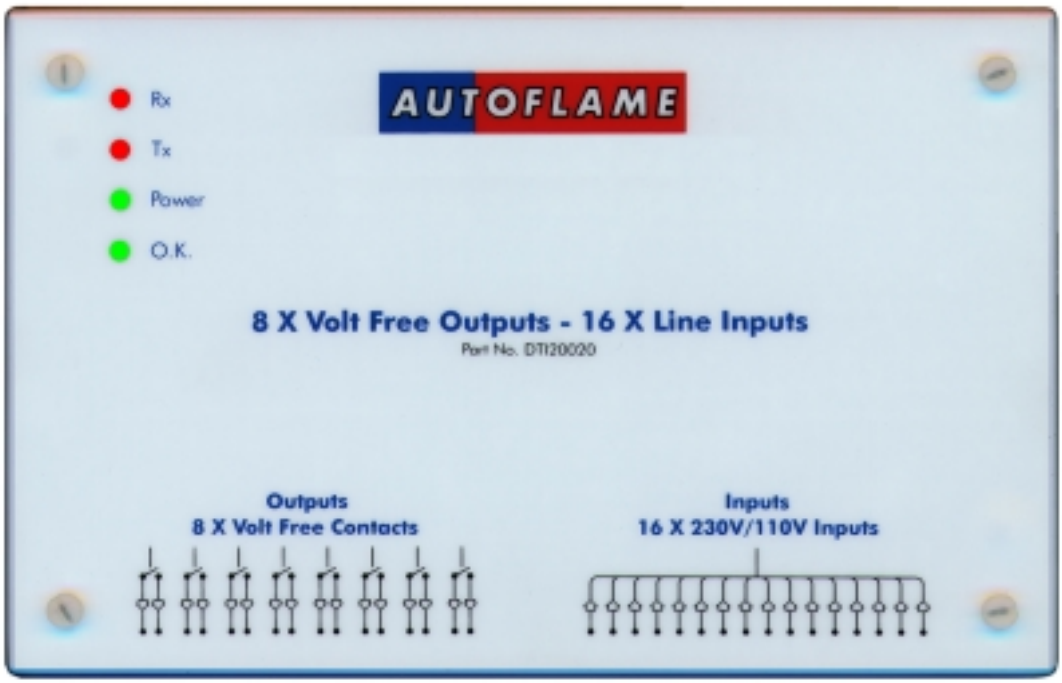

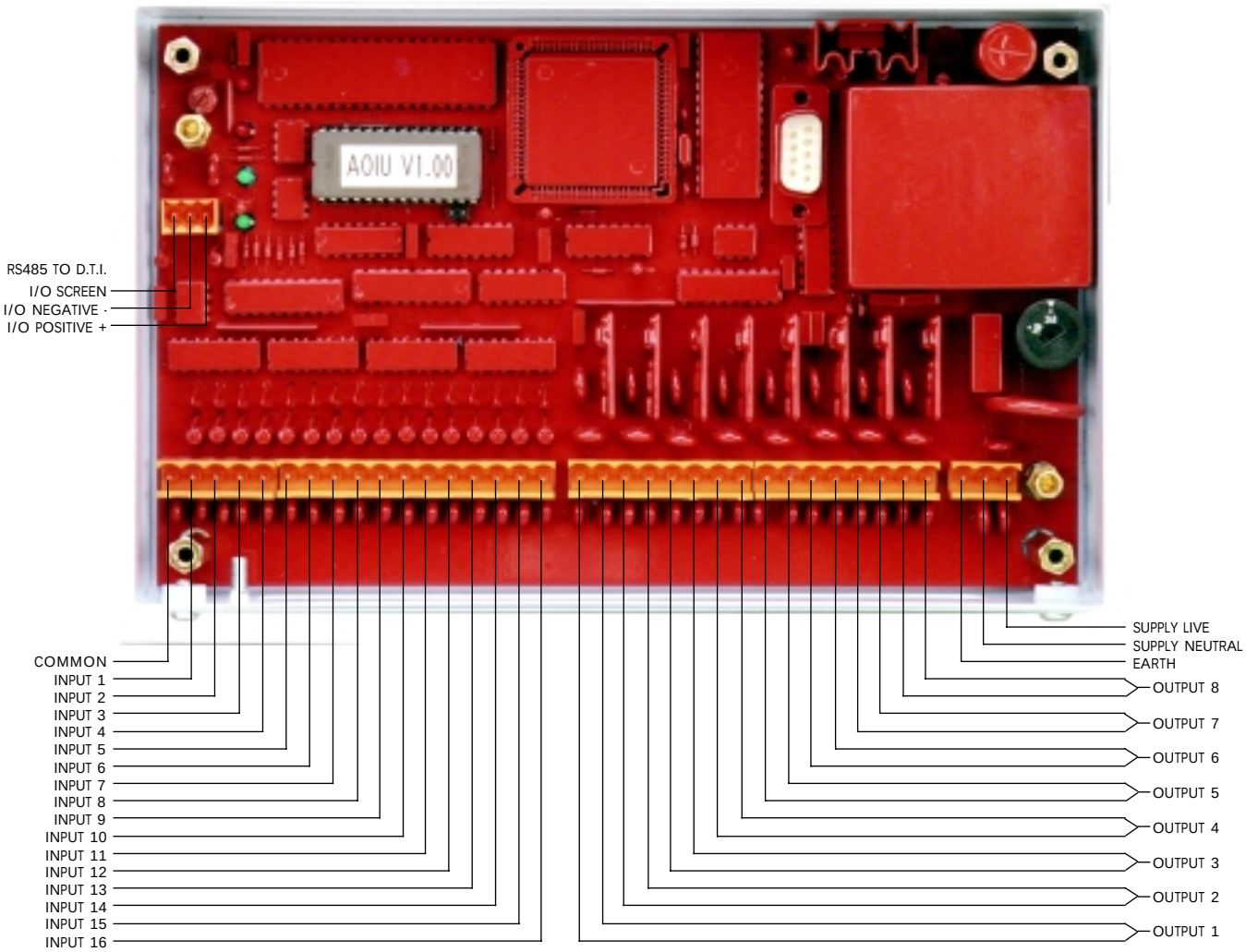

6.15.3 Setup configuration for direct connection to D.T.I. unit

To configure the unit connect a pc serial port to the setup port (use the Autoflame I/O setup lead). The pc must be running a terminal emulation program with the transmit and receive parameters set as follows:

Baud rate:	4800
Data bits	8
Parity	none
Stop bits	1

(Check the COM port is set to the one actually being used).

Pressing the <return> key should bring up the following opening message:

Digital I/O unit setup mode

Pressing the <ESC> key at any time during setup will cause exit from setup. If no keys are pressed for a period of approximately 5 minutes the unit will automatically exit from setup and revert to normal operation. During setup the unit will not carry out its normal functions. A test mode can be invoked during set up so the operation of the inputs and outputs can be checked. Every detail of the setup is not covered here as it is very repetitive. Experience can be quickly gained by working with an actual unit in setup mode. (Note that during normal operation if the pc is connected textual messages are displayed indicating communication between input/output units and the DTI).

If an existing setting is to be left unchanged then just press the <return> key.

The following shows samples of the various items that can be set. Text that is displayed on the screen is shown in bold.

Address is currently set to 1

Press <return> or enter new address(1-10) then <return>:

The address must be set in sequence for each digital I/O unit. e.g. if there are 3 digital I/O units on the system the first should be set address 1, the second to address 2, the third to address 3. Conflicts will occur if addresses are not set correctly

Input number 1:-
Present label : Digital Input 1
Enter new label :
Up to 30 alpha numeric characters can be used for the label

Present Monitor/Alarm status is : Monitor
Enter M/A or <return to proceed>

Present Active High/Low status is : High
Enter H/L or <return> to proceed

The label, M/A status and H/L status are repeated for all 16 inputs.

Output number1:-
Present label : Digital Output 1
Enter new label :
Up to 30 alpha numeric characters can be used for the label.

The label entry is repeated for all eight outputs. After all 8 digital outputs have been covered the setup mode is automatically exited and the screen displays

SETUP TERMINATED !

6.15.4 Front Facia Layout with LED Description

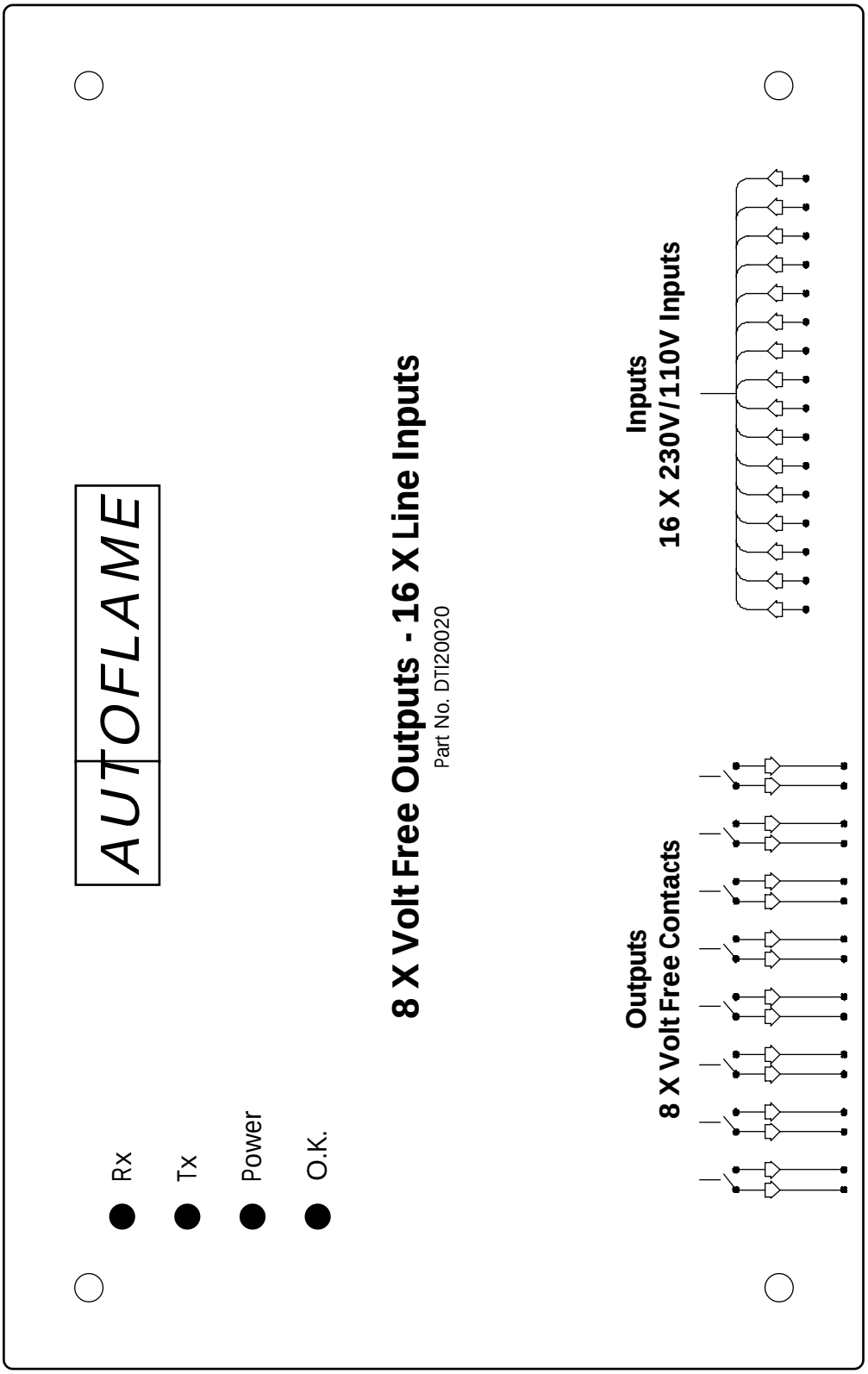

6.15.5 Fixing holes & Dimensional Details

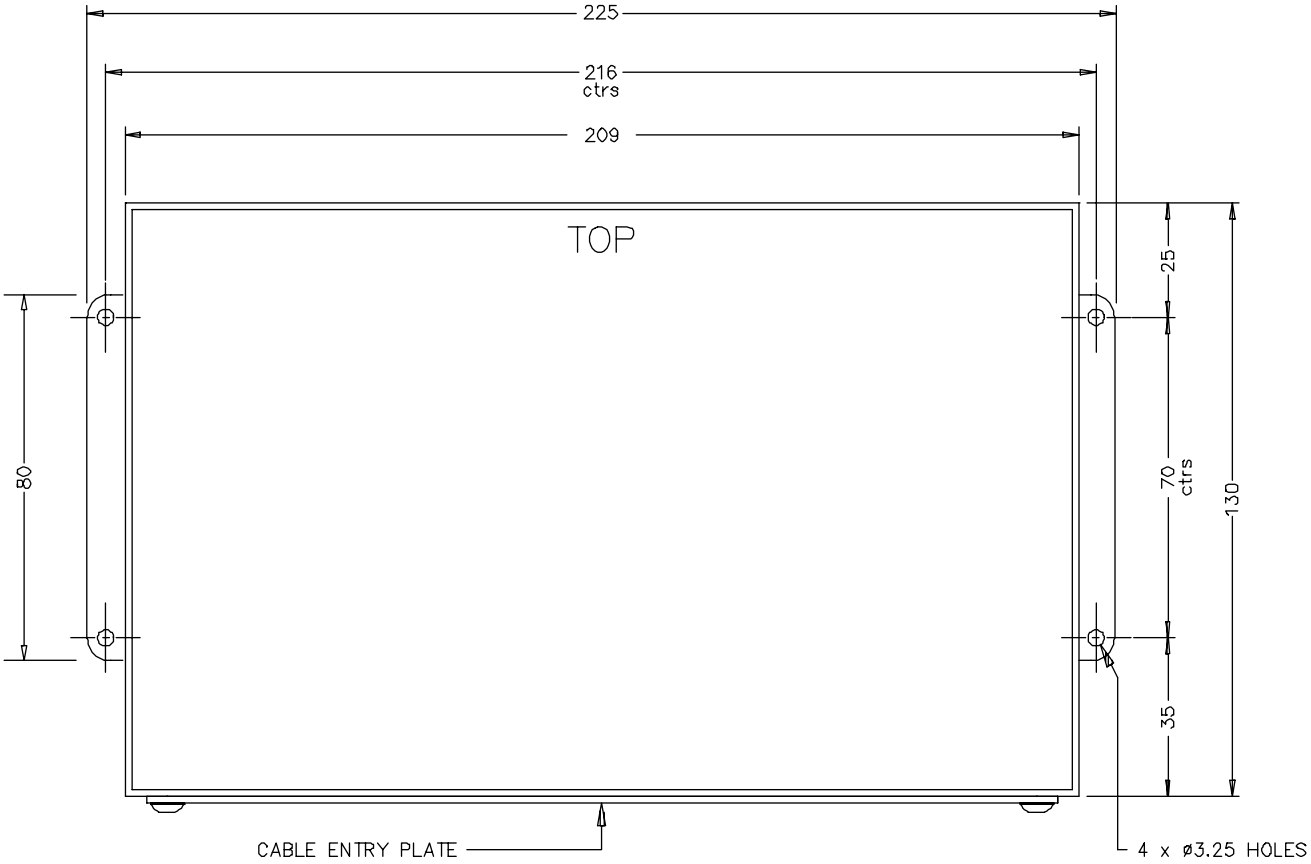

ALL DIMENSIONS IN MILLIMETRES

6.15.6 Wiring Connection Diagram

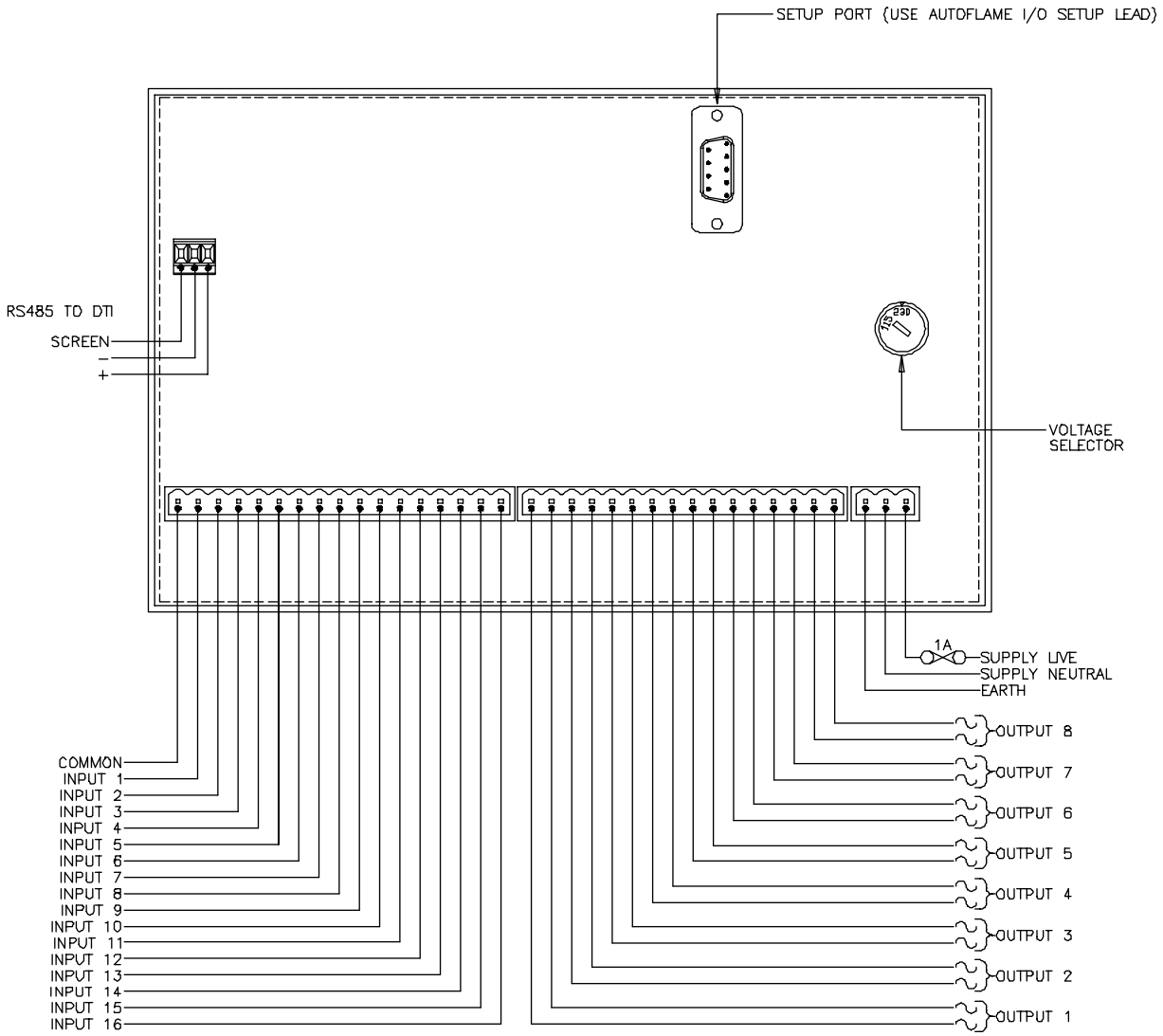

18:10:96/2997/GM

6.15.7 DTI to Digital Input/Output Unit Connection Diagram

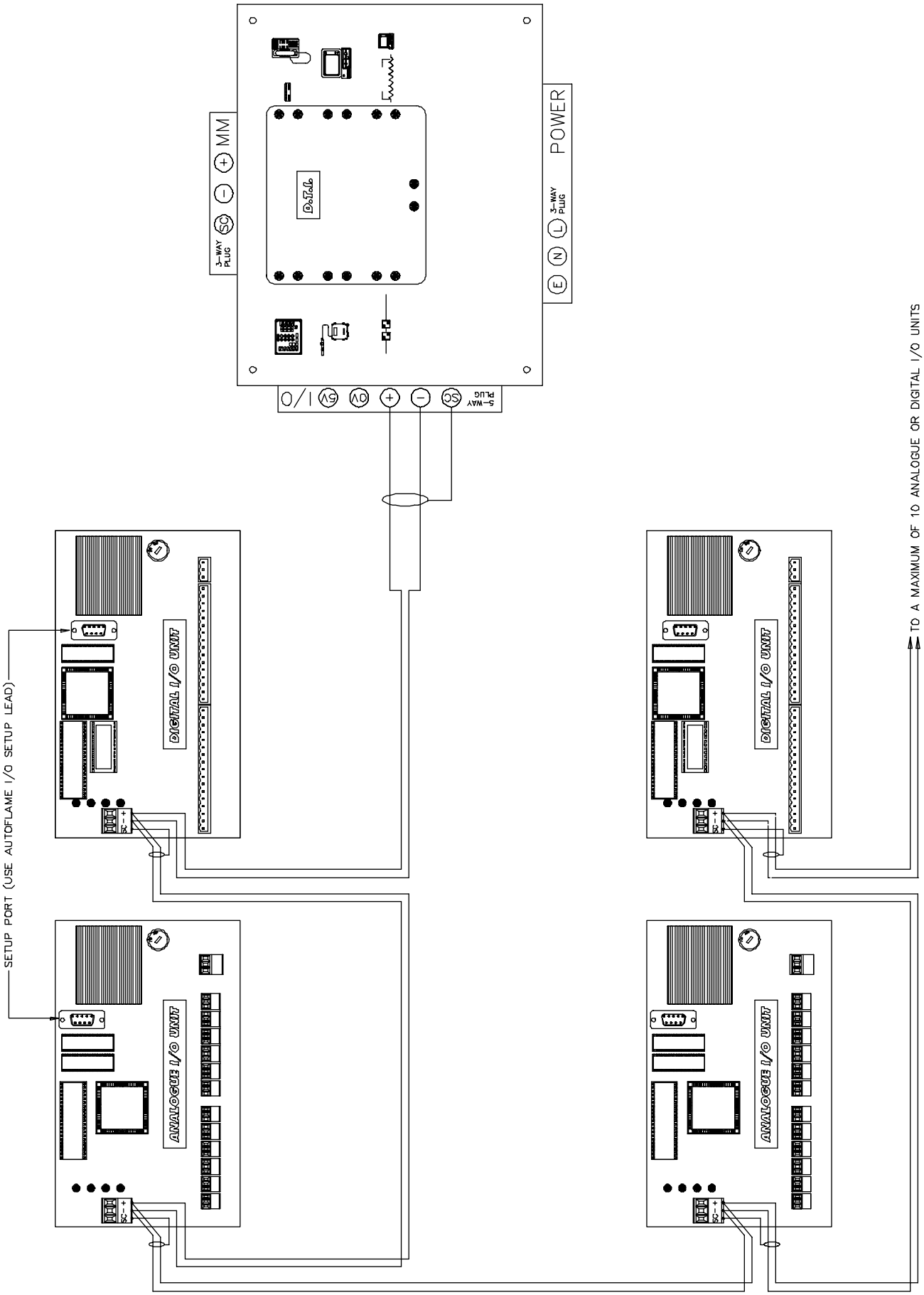

29:5:96/2967/GM

Section 6.17: Modbus Interface Index

6.17.1 Overview

This manual details information regarding the Data Transfer Interface (DTI) 'Modbus' type interface. This interface allows the DTI to simultaneously communicate with the standard Autoflame Windows 95 PCDTI System.

Some knowledge of the Micro Modultion system is necessary to appreciate the meaning of the information contained within this manual.

6.17.2 0X Reference Addresses - Coils

6.17.2.1 Enable/Disable command for each MM

MM	1	00001
MM	2	00002
MM	3	00003
MM	4	00004
MM	5	00005
MM	6	00006
MM	7	00007
MM	8	00008
MM	9	00009
MM	10	00010

6.17.2 0X Reference Addresses - Coils

6.17.2.2 Digital output

Digital I/O Module Number								
1	00017	00018	00019	00020	00021	00022	00023	00024
2	00025	00026	00027	00028	00029	00030	00031	00032
3	00033	00034	00035	00036	00037	00038	00039	00040
4	00041	00042	00043	00044	00045	00046	00047	00048
5	00049	00050	00051	00052	00053	00054	00055	00056
6	00057	00058	00059	00060	00061	00062	00063	00064
7	00065	00066	00067	00068	00069	00070	00071	00072
8	00073	00074	00075	00076	00077	00078	00079	00080
9	00081	00082	00083	00084	00085	00086	00087	00088
10	00089	00090	00091	00092	00093	00094	00095	00096

6.17.3 1X Reference Addresses - Inputs

6.17.3.1 Digital Input

Digital
I/O Module Number

	1	2	3	4	5	6	7	8
1	10001	10002	10003	10004	10005	10006	10007	10008
2	10017	10018	10019	10020	10021	10022	10023	10024
3	10033	10034	10035	10036	10037	10038	10039	10040
4	10049	10050	10051	10052	10053	10054	10055	10056
5	10065	10066	10067	10068	10069	10070	10071	10072
6	10081	10082	10083	10084	10085	10086	10087	10088
7	10097	10098	10099	10100	10101	10102	10103	10104
8	10113	10114	10115	10116	10117	10118	10119	10120
9	10129	10130	10131	10132	10133	10134	10135	10136
10	10145	10146	10147	10148	10149	10150	10151	10152

Digital Input

Digital
I/O Module Number

	9	10	11	12	13	14	15	16
1	10009	10010	10011	10012	10013	10014	10015	10016
2	10025	10026	10027	10028	10029	10030	10031	10032
3	10041	10042	10043	10044	10045	10046	10047	10048
4	10057	10058	10059	10060	10061	10062	10063	10064
5	10073	10074	10075	10076	10077	10078	10079	10080
6	10089	10090	10091	10092	10093	10094	10095	10096
7	10105	10106	10107	10108	10109	10110	10111	10112
8	10121	10122	10123	10124	10125	10126	10127	10128
9	10137	10138	10139	10140	10141	10142	10143	10144
10	10153	10154	10155	10156	10157	10158	10159	10160

6.17.3.2 1X Reference Addresses - inputs

MM Number

	1	2	3	4	5
CR1 Relay status	10193	10273	10353	10433	10513
	10194	10274	10354	10434	10514
	10195	10275	10355	10435	10515
	10196	10276	10356	10436	10516
	10197	10277	10357	10437	10517
	10198	10278	10358	10438	10518
	10199	10279	10359	10439	10519
	10200	10280	10360	10440	10520
Boiler Temp/pressure	10201	10281	10361	10441	10521
	10202	10282	10362	10442	10522
	10203	10283	10363	10443	10523
	10204	10284	10364	10444	10524
	10205	10285	10365	10445	10525
	10206	10286	10366	10446	10526
	10207	10287	10367	10447	10527
	10208	10288	10368	10448	10528
	10209	10289	10369	10449	10529
Flowmetering on	10210	10290	10370	10450	10530
CO displayed on F2/F3	10211	10291	10371	10451	10531
	10212	10292	10372	10452	10532
C or F	10213	10293	10373	10453	10533
Bar or PSI	10214	10294	10374	10454	10534
External Voltage	10215	10295	10375	10455	10535
	10216	10296	10376	10456	10536
EGA optioned	10217	10297	10377	10457	10537
Actual up to trim threshold	10218	10298	10378	10458	10538
Cooler ready	10219	10299	10379	10459	10539
Ambient temp OK	10220	10300	10380	10460	10540
NO optioned	10221	10301	10381	10461	10541
SO2 optioned	10222	10302	10382	10462	10542
Temp HI/LO	10223	10303	10383	10463	10543
OK to Sample	10224	10304	10384	10464	10544
Sequencing optioned	10225	10305	10385	10465	10545
Setpoint/Enable accepted	10226	10306	10386	10466	10546
	10227	10307	10387	10467	10547
	10228	10308	10388	10468	10548
	10229	10309	10389	10469	10549
	10230	10310	10390	10470	10550
	10231	10311	10391	10471	10551
	10232	10312	10392	10472	10552

1X Reference Addressees - inputs

MM Number	1	2	3	4	5
Hand operation	10233	10313	10393	10473	10553
Low Flame Hold	10234	10314	10394	10474	10554
	10235	10315	10395	10475	10555
	10236	10316	10396	10476	10556
	10237	10317	10397	10477	10557
	10238	10318	10398	10478	10558
MM working comms	10239	10319	10399	10479	10559
Input 41 status	10240	10320	10400	10480	10560
Lead boiler status	10241	10321	10401	10481	10561
Disabled status	10242	10322	10402	10482	10562
	10243	10323	10403	10483	10563
	10244	10324	10404	10484	10564
	10245	10325	10405	10485	10565
	10246	10326	10406	10486	10566
	10247	10327	10407	10487	10567
	10248	10328	10408	10488	10568
Slave burner left/right	10249	10329	10409	10489	10569
	10250	10330	10410	10490	10570
	10251	10331	10411	10491	10571
	10252	10332	10412	10492	10572
	10253	10333	10413	10493	10573
	10254	10334	10414	10494	10574
	10255	10335	10415	10495	10575
	10256	10336	10416	10496	10576
	10257	10337	10417	10497	10577
	10258	10338	10418	10498	10578
	10259	10339	10419	10499	10579
	10260	10340	10420	10500	10580
	10261	10341	10421	10501	10581
	10262	10342	10422	10502	10582
	10263	10343	10423	10503	10583
	10264	10344	10424	10504	10584
	10265	10345	10425	10505	10585
	10266	10346	10426	10506	10586
	10267	10347	10427	10507	10587
	10268	10348	10428	10508	10588
	10269	10349	10429	10509	10589
	10270	10350	10430	10510	10590
	10271	10351	10431	10511	10591
	10272	10352	10432	10512	10592

Addresses with no detailed function are unused

1X Reference Addresses - inputs

MM Number	6	7	8	9	10
CR1 Relay status	10593	10673	10753	10833	10913
	10594	10674	10754	10834	10914
	10595	10675	10755	10835	10915
	10596	10676	10756	10836	10916
	10597	10677	10757	10837	10917
	10598	10678	10758	10838	10918
	10599	10679	10759	10839	10919
	10600	10680	10760	10840	10920
Temperature/pressure	10601	10681	10761	10841	10921
	10602	10682	10762	10842	10922
	10603	10683	10763	10843	10923
	10604	10684	10764	10844	10924
	10605	10685	10765	10845	10925
	10606	10686	10766	10846	10926
	10607	10687	10767	10847	10927
	10608	10688	10768	10848	10928
	10609	10689	10769	10849	10929
Flowmetering on	10610	10690	10770	10850	10930
CO displayed on F2/F3	10611	10691	10771	10851	10931
	10612	10692	10772	10852	10932
C or F	10613	10693	10773	10853	10933
Bar or PSI	10614	10694	10774	10854	10934
External Voltage	10615	10695	10775	10855	10935
	10616	10696	10776	10856	10936
EGA optioned	10617	10697	10777	10857	10937
Actual up to trim threshold	10618	10698	10778	10858	10938
Cooler ready	10619	10699	10779	10859	10939
Ambient temp OK	10620	10700	10780	10860	10940
NO optioned	10621	10701	10781	10861	10941
SO2 optioned	10622	10702	10782	10862	10942
Temp HI/LO	10623	10703	10783	10863	10943
OK to Sample	10624	10704	10784	10864	10944
Sequencing optioned	10625	10705	10785	10865	10945
Setpoint/Enable accepted	10626	10706	10786	10866	10946
	10627	10707	10787	10867	10947
	10628	10708	10788	10868	10948
	10629	10709	10789	10869	10949
	10630	10710	10790	10870	10950
	10631	10711	10791	10871	10951
	10632	10712	10792	10872	10952

1X Reference Addresses - inputs

MM Number	6	7	8	9	10
Hand operation	10633	10713	10793	10873	10953
Low Flame Hold	10634	10714	10794	10874	10954
	10635	10715	10795	10875	10955
	10636	10716	10796	10876	10956
	10637	10717	10797	10877	10957
	10638	10718	10798	10878	10958
MM working comms	10639	10719	10799	10879	10959
Input 41 status	10640	10720	10800	10880	10960
Lead boiler status	10641	10721	10801	10881	10961
Disabled status	10642	10722	10802	10882	10962
	10643	10723	10803	10883	10963
	10644	10724	10804	10884	10964
	10645	10725	10805	10885	10965
	10646	10726	10806	10886	10966
	10647	10727	10807	10887	10967
	10648	10728	10808	10888	10968
Slave burner left/right	10649	10729	10809	10889	10969
	10650	10730	10810	10890	10970
	10651	10731	10811	10891	10971
	10652	10732	10812	10892	10972
	10653	10733	10813	10893	10973
	10654	10734	10814	10894	10974
	10655	10735	10815	10895	10975
	10656	10736	10816	10896	10976
	10657	10737	10817	10897	10977
	10658	10738	10818	10898	10978
	10659	10739	10819	10899	10979
	10660	10740	10820	10900	10980
	10661	10741	10821	10901	10981
	10662	10742	10822	10902	10982
	10663	10743	10823	10903	10983
	10664	10744	10824	10904	10984
	10665	10745	10825	10905	10985
	10666	10746	10826	10906	10986
	10667	10747	10827	10907	10987
	10668	10748	10828	10908	10988
	10669	10749	10829	10909	10989
	10670	10750	10830	10910	10990
	10671	10751	10831	10911	10991
	10672	10752	10832	10912	10992

Addresses with no detailed function are unused

1X Reference Addresses - inputs

The information on this page is only relevant to standalone EGAs connected directly to the DTI via the EGA port

EGA Number	1	2	3	4	5
Air Calibration in progress	10993	11009	11025	11041	11057
Gas Calibration in progress	10994	11010	11026	11042	11058
Cooler ready	10995	11011	11027	11043	11059
Ambient temperature ok	10996	11012	11028	11044	11060
Ambient temperature high	10997	11013	11029	11045	11061
Ambient temperature low	10998	11014	11030	11046	11062
	10999	11015	11031	11047	11063
EGA ready	11000	11016	11032	11048	11064
CO optioned	11001	11017	11033	11049	11065
NO optioned	11002	11018	11034	11050	11066
SO_2 optioned	11003	11019	11035	11051	11067
°C (0) or °F (1) optioned	11004	11020	11036	11052	11068
Sampling optioned	11005	11021	11037	11053	11069
2nd thermo couple optioned	11006	11022	11038	11054	11070
Voltage Input optioned	11007	11023	11039	11055	11071
	11008	11024	11040	11056	11072

EGA Number	6	7	8	9	10
Air Calibration in progress	11073	11089	11105	11121	11137
Gas Calibration in progress	11074	11090	11106	11122	11138
Cooler ready	11075	11091	11107	11123	11139
Ambient temperature ok	11076	11092	11108	11124	11140
Ambient temperature high	11077	11093	11109	11125	11141
Ambient temperature low	11078	11094	11110	11126	11142
	11079	11095	11111	11127	11143
EGA ready	11080	11096	11112	11128	11144
CO optioned	11081	11097	11113	11129	11145
NO optioned	11082	11098	11114	11130	11146
SO_2 optioned	11083	11099	11115	11131	11147
°C (0) or °F (1)	11084	11100	11116	11132	11148
Sampling optioned	11085	11101	11117	11133	11149
2nd thermo couple optioned	11086	11102	11118	11134	11150
Voltage Input optioned	11087	11103	11119	11135	11151
	11088	11104	11120	11136	11152

1X Reference Addresses - On line/Off line Status

In all cases, off line is indicated by 0, on line by 1

MM Number	1	2	3	4	5
	11793	11794	11795	11796	11797
MM Number	6	7	8	9	10
	11798	11799	11800	11801	11802
EGA Number	1	2	3	4	5
	11809	11810	11811	11812	11813
EGA Number	6	7	8	9	10
	11814	11815	11816	11817	11818
Digital I/O Number	1	2	3	4	5
	11825	11826	11827	11828	11829
Digital I/O Number	6	7	8	9	10
	11830	11831	11832	11833	11834
Analog I/O Number	1	2	3	4	5
	11841	11842	11843	11844	11845
Analog I/O Number	6	7	8	9	10
	11846	11847	11848	11849	11850

6.17.4 3X Reference Addresses - Input Registers

Analog Inputs

Input Number	1	2	3	4	5	6
Analog I/O Module Number						
1	30017	30018	30019	30020	30021	30022
2	30025	30026	30027	30028	30029	30030
3	30033	30034	30035	30036	30037	30038
4	30041	30042	30043	30044	30045	30046
5	30049	30050	30051	30052	30053	30054
6	30057	30058	30059	30060	30061	30062
7	30065	30066	30067	30068	30069	30070
8	30073	30074	30075	30076	30077	30078
9	30081	30082	30083	30084	30085	30086
10	30089	30090	30091	30092	30093	30094

Software Version

30097	Software Version Number
30098	Software Issue Number

3X Reference Addresses - Input Registers

MM number	1	2	3	4	5
Load index	30101	30151	30201	30251	30301
Startup/Firing status	30102	30152	30202	30252	30302
Sequence status	30103	30153	30203	30253	30303
Boiler Capacity	30104	30154	30204	30254	30304
Actual value	30105	30155	30205	30255	30305
Required value	30106	30156	30206	30256	30306
Fuel selected	30107	30157	30207	30257	30307
Number of channels	30108	30158	30208	30258	30308
Channel 1 position	30109	30159	30209	30259	30309
Channel 2 position	30110	30160	30210	30260	30310
Channel 3 position	30111	30161	30211	30261	30311
Channel 4 position	30112	30162	30212	30262	30312
MM Error number	30113	30163	30213	30263	30313
Single/Twin operation	30114	30164	30214	30264	30314
Run O2	30115	30165	30215	30265	30315
Run CO2	30116	30166	30216	30266	30316
Run CO	30117	30167	30217	30267	30317
Run Exhaust Temperature	30118	30168	30218	30268	30318
Run Efficiency	30119	30169	30219	30269	30319
Run NO	30120	30170	30220	30270	30320
Run SO2	30121	30171	30221	30271	30321
Comm. O2	30122	30172	30222	30272	30322
Comm. CO2	30123	30173	30223	30273	30323
Comm. CO	30124	30174	30224	30274	30324
Comm. Exh. Temp.	30125	30175	30225	30275	30325
Comm. Efficiency	30126	30176	30226	30276	30326
Comm. NO	30127	30177	30227	30277	30327
Comm SO2	30128	30178	30228	30278	30328
EGA error number	30129	30179	30229	30279	30329
Minimum Required value	30130	30180	30230	30280	30330
Maximum Required value	30131	30181	30231	30281	30331
Present flow units	30132	30182	30232	30282	30332
Present flow thousands	30133	30183	30233	30283	30333
Fuel 1 flow total units	30134	30184	30234	30284	30334
Fuel 1 flow total thousands	30135	30185	30235	30285	30335
Fuel 1 flow total millions	30136	30186	30236	30286	30336
Fuel 2 flow total units	30137	30187	30237	30287	30337
Fuel 2 flow total thousands	30138	30188	30238	30288	30338
Fuel 2 flow total millions	30139	30189	30239	30289	30339
Fuel 3 flow total units	30140	30190	30240	30290	30340
Fuel 3 flow total thousands	30141	30191	30241	30291	30341
Fuel 3 flow total millions	30142	30192	30242	30292	30342
Run Ambient	30143	30193	30243	30293	30343
Run ΔT	30144	30194	30244	30294	30344
COM Ambient	30145	30195	30245	30295	30345
COM ΔT	30146	30196	30246	30296	30346
Mk6/Mini6/Mini5 (0,4,5)	30147	30197	30247	30297	30347

3X Reference Addresses - Input Registers

MM number	6	7	8	9	10
Load index	30351	30401	30451	30501	30551
Startup/Firing status	30352	30402	30452	30502	30552
Sequence status	30353	30403	30453	30503	30553
Boiler Capacity	30354	30404	30454	30504	30554
Actual value	30355	30405	30455	30505	30555
Required value	30356	30406	30456	30506	30556
Fuel selected	30357	30407	30457	30507	30557
Number of channels	30358	30408	30458	30508	30558
Channel 1 position	30359	30409	30459	30509	30559
Channel 2 position	30360	30410	30460	30510	30560
Channel 3 position	30361	30411	30461	30511	30561
Channel 4 position	30362	30412	30462	30512	30562
MM Error number	30363	30413	30463	30513	30563
Single/Twin operation	30364	30414	30464	30514	30564
Run O2	30365	30415	30465	30515	30565
Run CO2	30366	30416	30466	30516	30566
Run CO	30367	30417	30467	30517	30567
Run Exhaust Temperature	30368	30418	30468	30518	30568
Run Efficiency	30369	30419	30469	30519	30569
Run NO	30370	30420	30470	30520	30570
Run SO2	30371	30421	30471	30521	30571
Comm. O2	30372	30422	30472	30522	30572
Comm. CO2	30373	30423	30473	30523	30573
Comm. CO	30374	30424	30473	30524	30574
Comm. Exh. Temp.	30375	30425	30475	30525	30575
Comm. Efficiency	30376	30426	30476	30526	30576
Comm. NO	30377	30427	30477	30527	30577
Comm SO2	30378	30428	30478	30528	30578
EGA error number	30379	30429	30479	30529	30579
Minimum Required value	30380	30430	30480	30530	30580
Maximum Required value	30381	30431	30481	30531	30581
Present flow units	30382	30432	30482	30532	30582
Present flow thousands	30383	30433	30483	30533	30583
Fuel 1 flow total units	30384	30434	30484	30534	30584
Fuel 1 flow total thousands	30385	30435	30485	30535	30585
Fuel 1 flow total millions	30386	30436	30486	30536	30586
Fuel 2 flow total units	30387	30437	30487	30537	30587
Fuel 2 flow total thousands	30388	30438	30488	30538	30588
Fuel 2 flow total millions	30389	30439	30489	30539	30589
Fuel 3 flow total units	30390	30440	30490	30540	30590
Fuel 3 flow total thousands	30391	30441	30491	30541	30591
Fuel 3 flow total millions	30392	30442	30492	30542	30592
Run Ambient	30393	30443	30493	30543	30593
Run ΔT	30394	30444	30494	30544	30594
COM Ambient	30395	30445	30495	30545	30595
COM ΔT	30396	30446	30496	30546	30596
Mk6/Mini6/Mini5 (0,4,5)	30397	30447	30497	30547	30597

3X Reference Addresses - Input Registers

The information on this page is only relevant to standalone EGAs connected directly to the DTI via the EGA port.

EGA number	1	2	3	4	5
Fuel Selected	30601	30621	30641	30661	30681
% O2	30602	30622	30642	30662	30682
% CO2	30603	30623	30643	30663	30683
ppm CO	30604	30624	30644	30664	30684
ppm NO	30605	30625	30645	30665	30685
ppm SO2	30606	30626	30646	30666	30686
Exhaust Temperature	30607	30627	30647	30667	30687
Efficiency	30608	30628	30648	30668	30688
Error Number	30609	30629	30649	30669	30689
% Voltage input	30610	30630	30650	30670	30690
Exhaust ΔT	30611	30631	30651	30671	30691
Ambient	30612	30632	30652	30672	30692
Auxiliary Temp.	30613	30633	30653	30673	30693
Service LED's	30614	30634	30654	30674	30694

EGA number	6	7	8	9	10
Fuel Selected	30701	30721	30741	30761	30781
% O2	30702	30722	30742	30762	30782
% CO2	30703	30723	30743	30763	30783
ppm CO	30704	30724	30744	30764	30784
ppm NO	30705	30725	30745	30765	30785
ppm SO2	30706	30726	30746	30766	30786
Exhaust Temperature	30707	30727	30747	30767	30787
Efficiency	30708	30728	30748	30768	30788
Error Number	30709	30729	30749	30769	30789
% Voltage input	30710	30730	30750	30770	30790
Exhaust ΔT	30711	30731	30751	30771	30791
Ambient	30712	30732	30752	30772	30792
Auxiliary Temp.	30713	30733	30753	30773	30793
Service LED's	30714	30734	30754	30774	30794

MM number	1	2	3	4	5
Fuel 4 Flow total units	30801	30851	30901	30951	31001
Fuel 4 Flow total thousands	30802	30852	30902	30952	31002
Fuel 4 Flow total millions	30803	30853	30903	30953	31003
Channel 5 Output 0-255	30804	30854	30904	30954	31004
Channel 5 Input 0-255	30805	30855	30905	30955	31005
Channel 6 Output 0-255	30806	30856	30906	30956	31006
Channel 6 Input 0-255	30807	30857	30907	30957	31007
Option 1	30808	30858	30908	30958	31008
Option 77	30809	30859	30909	30959	31009
Option 90	30810	30860	30910	30960	31010
Option 91	30811	30861	30911	30961	31011
Option 92	30812	30862	30912	30962	31012
Option 93	30813	30863	30913	30963	31013
Option 94	30814	30864	30914	30964	31014
Option 95	30815	30865	30915	30965	31015
Option 96	30816	30866	30916	30966	31016
Option 97	30817	30867	30917	30967	31017
Option 98	30818	30868	30918	30968	31018
Option 99	30819	30869	30919	30969	31019
Option 100	30820	30870	30920	30970	31020
Option 101	30821	30871	30921	30971	31021
Option 102	30822	30872	30922	30972	31022
Option 103	30823	30873	30923	30973	31023
Option 104	30824	30874	30924	30974	31024
Option 105	30825	30875	30925	30975	31025
Option 106	30826	30876	30926	30976	31026
Option 107	30827	30877	30927	30977	31027
Option 108	30828	30878	30928	30978	31028
Option 109	30829	30879	30929	30979	31029
Lockout Code	30830	30880	30930	30980	31030
Option 71 Fuel 1 Type	30831	30881	30931	30981	31031
Option 72 Fuel 2 Type	30832	30882	30932	30982	31032
Option 73 Fuel 3 Type	30833	30883	30933	30983	31033
Option 74 Fuel 4 Type	30834	30884	30934	30984	31034
Option 61 Flow Units Fuel 1	30835	30885	30935	30985	31035
Option 62 Flow Units Fuel 2	30836	30886	30936	30986	31036
Option 63 Flow Units Fuel 3	30837	30887	30937	30987	31037
Option 64 Flow Units Fuel 4	30838	30888	30938	30988	31038
Fuel 1 Hours Run	30839	30889	30939	30989	31039
Fuel 2 Hours Run	30840	30890	30940	30980	31040
Fuel 3 Hours Run	30841	30891	30941	30981	31041
Fuel 4 Hours Run	30842	30892	30942	30982	31042
Fuel 1 Start ups	30843	30893	30943	30983	31043
Fuel 2 Start ups	30844	30894	30944	30984	31044
Fuel 3 Start ups	30845	30895	30945	30985	31045
Fuel 4 Start ups	30846	30896	30946	30986	31046
Air Pressure	30847	30897	30947	30987	31047
Air Pressure Coding	30848	30898	30948	30988	31048
Gas Pressure	30849	30899	30949	30989	31049
Gas Pressure Coding	30850	30900	30950	31000	31050

MM number	6	7	8	9	10
Fuel 4 Flow total units	31051	31101	31151	31201	31251
Fuel 4 Flow total thousands	31052	31102	31152	31202	31252
Fuel 4 Flow total millions	31053	31103	31153	31203	31253
Channel 5 Output 0-255	31054	31104	31154	31204	31254
Channel 5 Input 0-255	31055	31105	31155	31205	31255
Channel 6 Output 0-255	31056	31106	31156	31206	31256
Channel 6 Input 0-255	31057	31107	31157	31207	31257
Option 1	31058	31108	31158	31208	31258
Option 77	31059	31109	31159	31209	31259
Option 90	31060	31110	31160	31210	31260
Option 91	31061	31111	31161	31211	31261
Option 92	31062	31112	31162	31212	31262
Option 93	31063	31113	31163	31213	31263
Option 94	31064	31114	31164	31214	31264
Option 95	31065	31115	31165	31215	31265
Option 96	31066	31116	31166	31216	31266
Option 97	31067	31117	31167	31217	31267
Option 98	31068	31118	31168	31218	31268
Option 99	31069	31119	31169	31219	31269
Option 100	31070	31120	31170	31220	31270
Option 101	31071	31121	31171	31221	31271
Option 102	31072	31122	31172	31222	31272
Option 103	31073	31123	31173	31223	31273
Option 104	31074	31124	31174	31224	31274
Option 105	31075	31125	31175	31225	31275
Option 106	31076	31126	31176	31226	31276
Option 107	31077	31127	31177	31227	31277
Option 110	31078	31128	31178	31228	31278
Option 111	31079	31129	31179	31229	31279
Lockout Code	31080	31130	31180	31230	31280
Option 71 Fuel 1 Type	31081	31131	31181	31231	31281
Option 72 Fuel 2 Type	31082	31132	31182	31232	31282
Option 73 Fuel 3 Type	31083	31133	31183	31233	31283
Option 74 Fuel 4 Type	31084	31134	31184	31234	31284
Option 61 Flow Units Fuel 1	31085	31135	31185	31235	31285
Option 62 Flow Units Fuel 2	31086	31136	31186	31236	31286
Option 63 Flow Units Fuel 3	31087	31137	31187	31237	31287
Option 64 Flow Units Fuel 4	31088	31138	31188	31238	31288
Fuel 1 Hours Run	31089	31139	31189	31239	31289
Fuel 2 Hours Run	31190	31140	31190	31240	31290
Fuel 3 Hours Run	31191	31141	31191	31241	31291
Fuel 4 Hours Run	31192	31142	31192	31242	31292
Fuel 1 Start ups	31193	31143	31193	31243	31293
Fuel 2 Start ups	31194	31144	31194	31244	31294
Fuel 3 Start ups	31195	31145	31195	31245	31295
Fuel 4 Start ups	31196	31146	31196	31246	31296
Air Pressure	31197	31147	31197	31247	31297
Air Pressure Coding	31198	31148	31198	31248	31298
Gas Pressure	31199	31149	31199	31249	31299
Gas Pressure Coding	31100	31150	31200	31250	31300

MM1 Error	31301
MM2 Error	31302
MM3 Error	31303
MM4 Error	31304
MM5 Error	31305
MM6 Error	31306
MM7 Error	31307
MM8 Error	31308
MM9 Error	31309
MM10 Error	31310
MM1 Lockout	31311
MM2 Lockout	31312
MM3 Lockout	31313
MM4 Lockout	31314
MM5 Lockout	31315
MM6 Lockout	31316
MM7 Lockout	31317
MM8 Lockout	31318
MM9 Lockout	31319
MM10 Lockout	31320

Analogue Inputs - Totalised Values

Analogue I/O unit number	Channel	1	2	3	4	5	6
1	byte 7/6	31324	31328	31332	31336	31340	31344
	byte 5/4	31323	31327	31331	31335	31339	31343
	byte 3/2	31322	31326	31330	31334	31338	31342
	byte 1/0	31321	31325	31329	31333	31337	31341
2	byte 7/6	31348	31352	31356	31360	31364	31368
	byte 5/4	31347	31351	31355	31359	31363	31367
	byte 3/2	31346	31350	31354	31358	31362	31366
	byte 1/0	31345	31349	31353	31357	31361	31365
3	byte 7/6	31372	31376	31380	31384	31388	31392
	byte 5/4	31371	31375	31379	31383	31387	31391
	byte 3/2	31370	31374	31378	31382	31386	31390
	byte 1/0	31369	31373	31377	31381	31385	31389
4	byte 7/6	31396	31400	31404	31408	31412	31416
	byte 5/4	31395	31399	31403	31407	31411	31415
	byte 3/2	31394	31398	31402	31406	31410	31414
	byte 1/0	31393	31397	31401	31405	31409	31413
5	byte 7/6	31420	31424	31428	31432	31436	31440
	byte 5/4	31419	31423	31427	31431	31435	31439
	byte 3/2	31418	31422	31426	31430	31434	31438
	byte 1/0	31417	31421	31425	31429	31433	31437
6	byte 7/6	31444	31448	31452	31456	31460	31464
	byte 5/4	31443	31447	31451	31455	31459	31463
	byte 3/2	31442	31446	31450	31454	31458	31462
	byte 1/0	31441	31445	31449	31453	31457	31461
7	byte 7/6	31468	31472	31476	31480	31484	31488
	byte 5/4	31467	31471	31475	31479	31483	31487
	byte 3/2	31466	31470	31474	31478	31482	31486
	byte 1/0	31465	31469	31473	31477	31481	31485
8	byte 7/6	31492	31496	31500	31504	31508	31512
	byte 5/4	31491	31495	31499	31503	31507	31511
	byte 3/2	31490	31494	31498	31502	31506	31510
	byte 1/0	31489	31493	31497	31501	31505	31509
9	byte 7/6	31516	31520	31524	31528	31532	31536
	byte 5/4	31515	31519	31523	31527	31531	31535
	byte 3/2	31514	31518	31522	31526	31530	31534
	byte 1/0	31513	31517	31521	31525	31529	31533
10	byte 7/6	31540	31544	31548	31552	31556	31560
	byte 5/4	31539	31543	31547	31551	31555	31559
	byte 3/2	31538	31542	31546	31550	31554	31558
	byte 1/0	31537	31541	31545	31549	31553	31557

6.17.5 4X Reference Addresses - Holding Registers

Individual Required value for each Micro Modulation unit

MM 1	40001
MM 2	40002
MM 3	40003
MM 4	40004
MM 5	40005
MM 6	40006
MM 7	40007
MM 8	40008
MM 9	40009
MM 10	40010

Global Required Value for all MMs

40011

Lead Boiler selection

40012

Reserved - DO NOT USE

40013 - 40016

4X Reference Addresses - Holding Registers

Analog Outputs

Output Number	1	2	3	4	5	6
Analog I/O Module Number						
1	40017	40018	40019	40020	40021	40022
2	40025	40026	40027	40028	40029	40030
3	40033	40034	40035	40036	40037	40038
4	40041	40042	40043	40044	40045	40046
5	40049	40050	40051	40052	40053	40054
6	40057	40058	40059	40060	40061	40062
7	40065	40066	40067	40068	40069	40070
8	40073	40074	40075	40076	40077	40078
9	40081	40082	40083	40084	40085	40086
10	40089	40090	40091	40092	40093	40094

6.17.6 Switch Settings - Modbus Operation

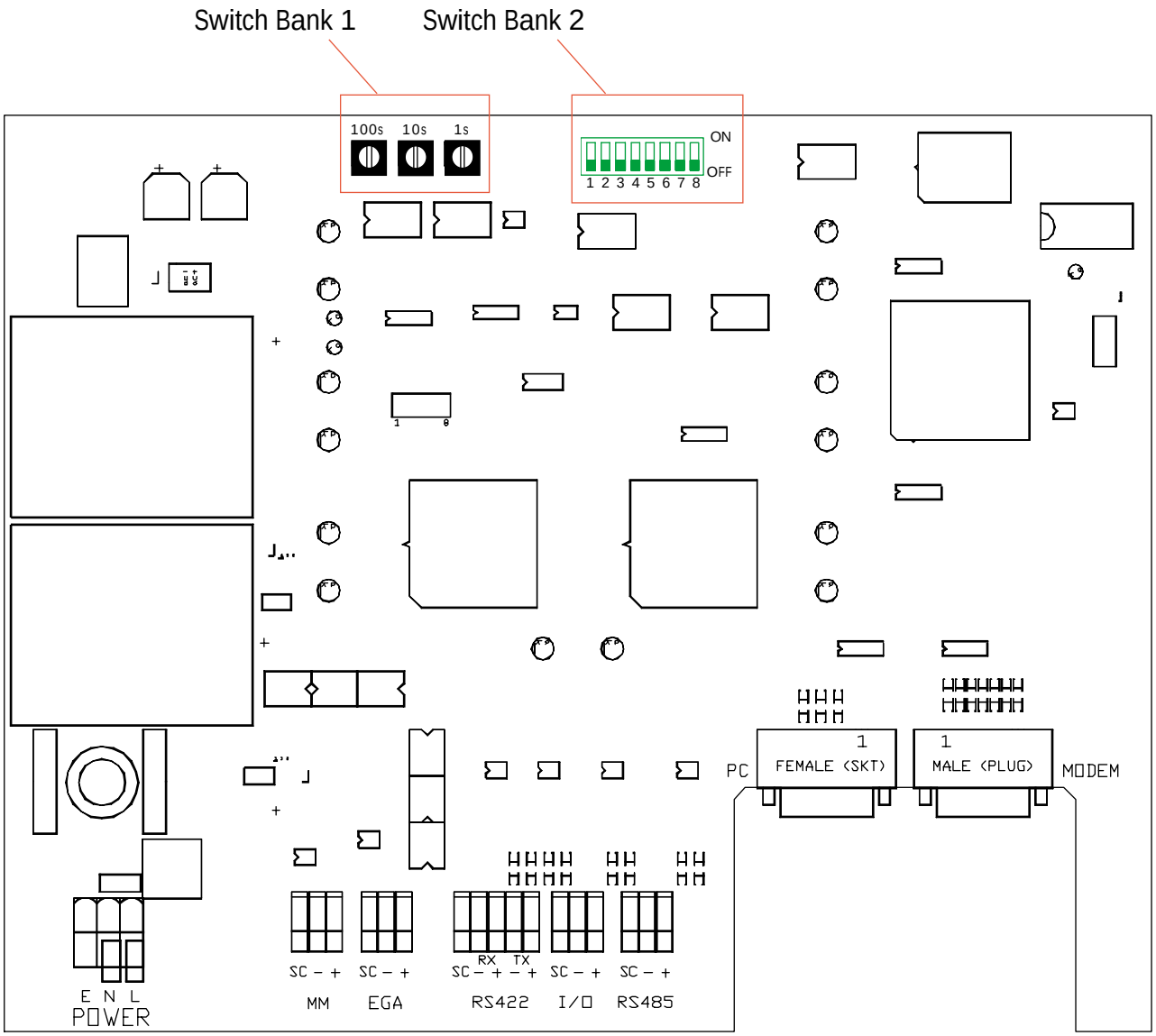

Switch Bank 1

Set the Modbus address accordingly.

For example, to set address number 123:

100s	= 1
10s	= 2
1s	= 3

Switch Bank 2

1	off -	Modbus 'ASCII' mode
	on -	Modbus 'RTU' mode
2	Transmission settings	
	off -	8 data bits, 1 stop bit, no parity.
	on -	8 data bits, 1 stop bit, even parity.
3-5	no user function, must be set off	
6	Windows PCDTI/MODBUS operation	
	off -	422 port set for Windows PCDTI
	on -	422 port set for MODBUS
7	Windows PCDTI/MODBUS operation	
	off -	PC port set for WinPCDTI
	on -	PC port set for MODBUS
8	MM Port Baud Rate	
	off -	9600 (Mk6, Mini Mk6 and Mini Mk5 MMs)
	on -	4800 (Older Mk5 and Mini MMs)*

* Technical Memo: Data Communication Compatibility 3/9/1999

6.17.7 Other Information

Modbus Transmission Interface

There is no hardware or software flow control on any port.

Baud Rate 9600.

Supported MODBUS Commands

1	Read coil status
2	Read input status
3	Read holding registers
4	Read input registers
5	Force single coil
6	Preset single register
15	Force multiple coils
16	Preset multiple registers

6.17.7.3 Supported Exception Responses

Exception responses are not supported. No response is given to an unrecognised request.

6.17.7.4 Serial Port Connections

RS232 'PC' port - 9 Way Female D connector

PIN	Function
2	Data out
3	Data in
5	Signal ground

RS422 port - Screw terminal blocks

Receive and transmit connections are as identified on printed circuit board.

6.17.8 Relevance of MM/EGA data

Each MM/EGA can provide the following information. All values are instantaneous. Each MM/EGA system updates the DTI approximately once every 20 seconds. Certain values and some values under certain conditions may require a decimal point. In these cases the user must add the decimal point accordingly (* only valid if EGA operational on system)

Digital Inputs (1x references)

Command status of M.M. 'CR Relay'	O - Off, 1 - On
Flow detector type	O - Temperature, 1 - Pressure
Optioned for flow metering	O - No, 1 - Yes
CO off/on on fuel 2 (fuel 1 CO always on)	O - Off, 1 - On
Temperature units	O - C, 1 - F
Pressure units	O - bar, 1 - psi
Optioned for voltage input modulation	O - No, 1 - Yes
Optioned for EGA	O - No, 1 - Yes
Boiler up to 'trimming' temperature	O - No, 1 - Yes
EGA cooler temperature ready	O - No, 1 - Yes
EGA ambient temperature OK	O - No, 1 - Yes
Optioned to display NO	O - No, 1 - Yes
Option to display SO	O - No, 1 - Yes
EGA ambient temperature low/high (relevant if bit 3 (ambient temperature) is O)	O - LOW, 1 - HIGH
Optioned for sequencing	O - NO, 1 - YES
Setpoint/Disable commands accepted	O - NO, 1 - YES
Hand operation status	O - Modulating, 1 - Hand Operation
Low flame hold status	O - Modulating 1 - Low Flame Hold
This MM controlling DTI bus communication	O - NO, 1 - YES
Input 41 set (lead boiler select)	O - NO, 1 - YES

Lead boiler status	O - not lead boiler 1 - lead boiler
'Disabled' status	O - enabled 1 - disabled
Slave burner indication status - test bit O	O - master plus one, 1 - master minus one

Analogue Inputs (3x references)

0-100	Firing rate/load index - percentage	
19-26	Indicates burner firing status 19 waiting for stat circuit to complete 20 waiting for command to drive air damper to purge position 21 driving air damper to purge position 22 purging, waiting for command to drive valves to ignition position 23 driving valves to ignition position 24 ignition taking place 25 burner firing and modulating 26 post purge taking place (if O indicated transmission is direct from EGA)	
0-3	Sequencing command status for this boiler Sequence state 0 - ON 1 - STANDBY 2 - WARM 3 - OFF	
0-250	Maximum firing rate - just the number entered in option 34	
0-999	Actual value of boiler flow temperature - degrees C	
0.0-99.9	(Pressure Bar)	
0-999	Desired value of boiler flow temperature - degrees C	
0.0-99.9	(Pressure Bar)	
0-2	Present fuel selected	0 - Fuel 1 (usually GAS) 1 - Fuel 2 (usually OIL) 2 - Fuel 3 (usually OIL)
1-7	Number of Channels in operation (add one to this to get total number)	
-6.0-96.0	CH1 positioning motor position degrees angular	
-6.0-96.0	CH2 positioning motor position degrees angular	
-6.0-96.0	CH3 positioning motor position degrees angular	
-6.0-96.0	Ch4 positioning motor position degrees angular	
0-N	Fatal Error Code	0 - System is OK 1 - N system shut down
	Value is as MM ERR display	
0-2	Single/twin burner operation 0 - single burner 1 - twin burner (both together only) 2 - twin burner (both together/one or the other)	
0-25.5	Present value percentage oxygen in flue gas	
0-25.5	Present value percentage carbon dioxide in flue gas	
0-999	Present value ppm carbon monoxide in flue gas	
0-999	Present value flue gas temperature	
0-99.9	Present value percentage combustion efficiency	

0-999	Actual value NO
0-999	Actual value SO2
0-25.5	Commissioned value percentage oxygen in flue gas
0-25.5	Commissioned value percentage carbon dioxide in flue gas
0-999	Commissioned value ppm carbon monoxide in flue gas
0-999	Commissioned value flue gas temperature
0-99.9	Commissioned value percentage combustion efficiency
0-999	Commission value NO
0-999	Commission value SO2
0-N	EGA error code normal - 0 any other value is error
0-99.9	Minimum setpoint accepted(0-999, 0-99.9)
0-99.9	Minimum setpoint accepted(0-999, 0-99.9)
0-999	Flow value units
0-999	Flow value thousands (multiply thousands value by 1000 then add units value then divide by 100 to get flow value)
0-999	Fuel 1 totalised value units
0-999	Fuel 1 totalised value thousands
0-999	Fuel 1 totalised value millions
0-999	Fuel 2 totalised value units
0-999	Fuel 2 totalised value thousands
0-999	Fuel 2 totalised value millions
0-999	Fuel 3 totalised value units
0-999	Fuel 3 totalised value thousands
0-999	Fuel 3 totalised value millions
-6.0-96.0	Ch5 positioning motor position degrees angular
-6.0-96.0	Ch6 positioning motor position degrees angular
-6.0-96.0	Ch7 positioning motor position degrees angular
-6.0-96.0	Ch8 positioning motor position degrees angular

6.17.9 Further Information

For more detailed information regarding the Modbus protocol, refer to the following publication:

Modicon Modbus Protocol Reference Guide,
PI-MBUS-300

Also visit the website: www.modicon.com

6.18 AUTOFLAME WINPCDTI SOFTWARE

The Autoflame WinPCDTI software runs under Windows 95/98/NT4 and brings together our current range of products.

There are two modes of program operation:

Plant Supervisor for local control
Plant Manager for remote monitoring via modem for a number of sites.

The software is presented in an intuitive graphical format where pictures and buttons are used to lead the operator through all the available functions.

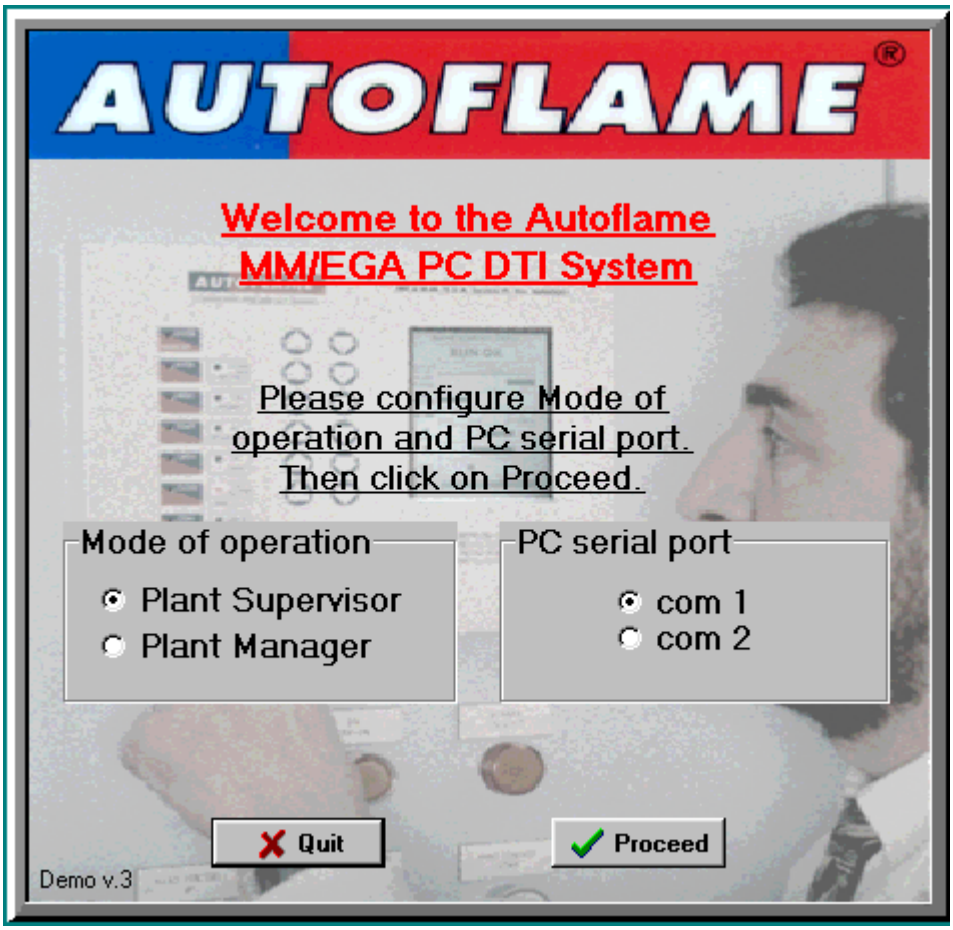

Software Installation

To install WinPCDTI to your computer, follow the instructions supplied with the diskettes.

During the installation, you will be prompted for your serial number. This is the four part code printed on one side of your dongle, e.g. DTI-1111-AAAA-1111.

The dongle must be attached to your PC for WinPCDTI to operate. The first time the program is run, the Welcome screen prompts the user to select the mode of operation, either Plant Manager or Plant Supervisor. You will need to specify which serial port you are using (COM1/COM2).

Section 6.19: Johnson Metasys Interface Index

6.19.1 Overview

Autoflame's DTI unit interfaces with the Autoflame MM/EGA system. In doing so it provides a simple means of gathering information and presenting it to a bus or network. The DTI will interface with up to ten MM/EGA systems and up to ten Analog and/or Digital units. This section details information regarding the Data Transfer Interface (DTI) 'Metasys' interface.

6.19.2 Connecting the DTI to Metasys

The DTI has a port which provides direct access to the Metasys network. The installation engineer must set the Metasys address accordingly.

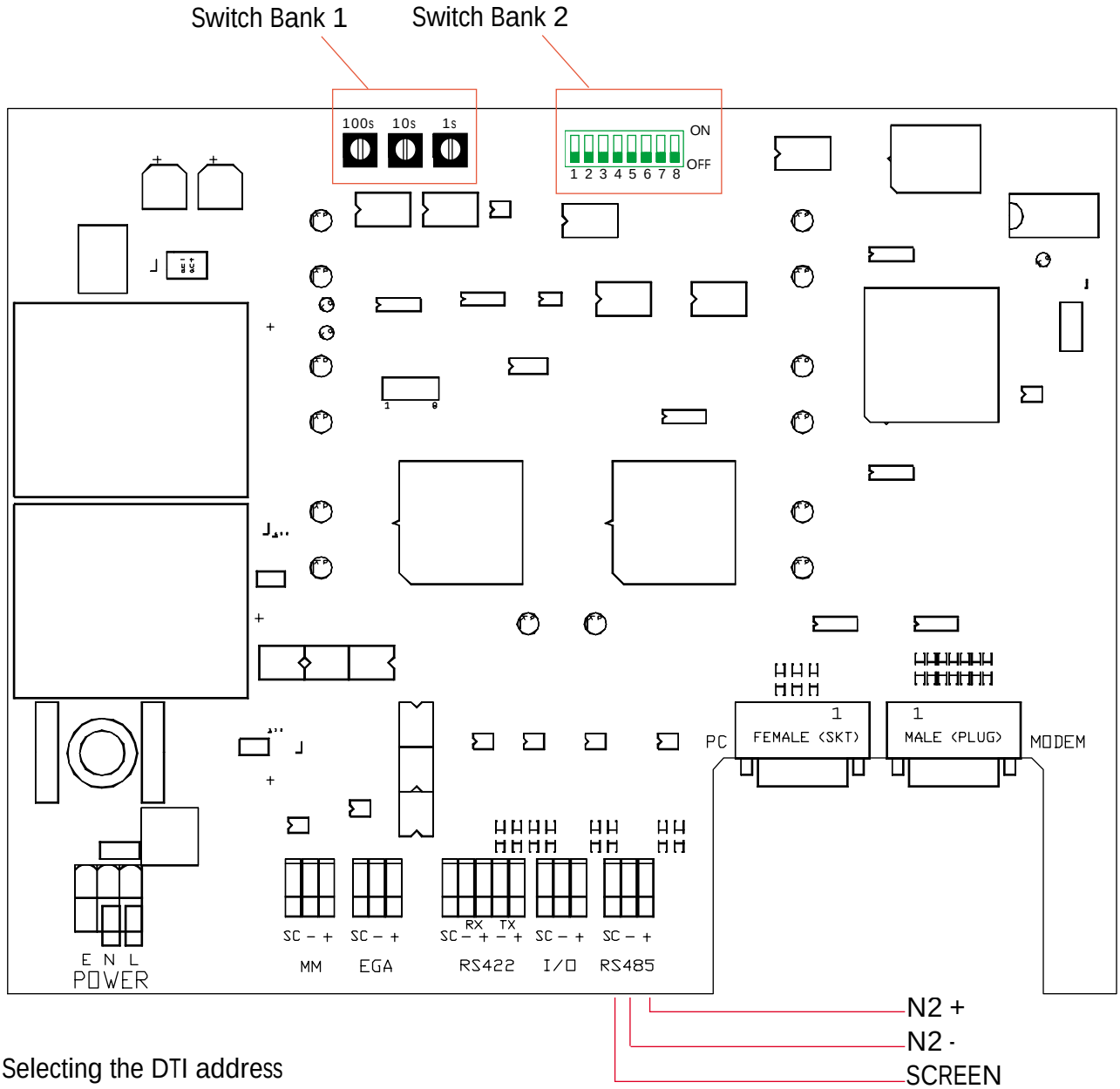

Selecting the DTI address

The DTI N2 address is selected by means of Switch Bank 1. Set the three rotary switches appropriately.
For example, to set address number 123: 100s = 1
10s = 2
1s = 3

The DTI can occupy any address on the Metasys network, however the DTI requires eleven free consecutive address, starting from and including the address selected from SW1. If the DTI is given address 30, 30 is selected on SW1. However addresses 31 to 40 must also be free on the network.

If Metasys operation is required alongside Modbus operation, the Metasys address and Modbus address will have to be the same.

If WinPCDTI/Modbus/Metasys combinations are used, the required value and enable/disable commands can be implemented by any of these three means.

6.19.3 Network Point Table

The DTI occupies 11 (eleven) address on the network. The first 10 address are used to read data from the 10 MM/EGA systems. The last address is used to read and write data to the analog and digital units. This address is also used to read the status of MM/EGA systems and write values to them. To summarize the first 10 addresses are read only and are only used for the MM/EGA's. The last (eleventh) address is used to read and write values to both the analog and digital units as well as the MM's. All of the systems addresses implement internal integer and byte values only. A full network point table follows.

Technical Note

Please be aware that the Change of State feature is not implemented on the DTI/Metasys interface. Therefore, normal Metasys COS (Alarm Limits for analog values and normal condition for Binary) notification will be defeated. If COS notification is required, then it is necessary for the operator to:

- map the specific object(s) requiring COS to a CS Object
- define a AD or BD object with the CS object of the required COS point as the Associated In
- assign Alarm Limits to the AD
- The AD or BD point will only be scanned at a minimum of 30 seconds
- The normal state of the BO must be updated (written to) by GPL.

Analog/Binary Input points that are mapped in directly that do not support COS will never report a change of state condition. They will report the current value when read but no alarm notification will occur. A read will only occur if a focus window is open or a feature requires the current value.

6.19.3.1 Network Point Table - First Ten Addresses (MM/EGA values)

NPT	NPA	UNITS	DESCRIPTION	RANGE	NOTE
AI	Not used				
BI	Not used				
AO	Not used				
BO	Not used				
ADF	Not used				
ADI	01	%	Load index	0 to 100	
	02		Startup/Firing status	19 - 28	19 = Waiting for stat. circuit to complete. 20 = Waiting for command to drive air damper to purge position. 21 = Driving air damper to purge position. 22 = Purging, waiting for command to drive values to ignition position. 23 = Driving valves to ignition position. 24 = Ignition taking place. 25 = Burner firing and modulating. 26 = Post purge taking place. 27 = Not used. 28 = Golden start.
	03		Sequence status	1 to 10	
	04		Boiler capacity		see option 34 on MM
	05		Actual value		see option 1 on MM
	06		Required value		see option 1 on MM
	07		Fuel selected	0 to 3	0 = Fuel 1 (usually gas) 1 = Fuel 2 (usually oil) 2 = Fuel 3 (usually oil) 3 = Fuel 4 (Aux.)
	08		Number of channels	0 to 8	
	09		Channel 1 position	-6.0 to 96.0	Displayed as -60 to 960
	10		Channel 2 position	-6.0 to 96.0	Displayed as -60 to 960
	11		Channel 3 position	-6.0 to 96.0	Displayed as -60 to 960
	12		Channel 4 position	-6.0 to 96.0	Displayed as -60 to 960
	13		MM error number	00 to 73	see section 2.3.1.2 of manual
	14		Single/Twin operation	0 to 1	0 = single 1 = twin burner
	15	%	Run O_2	0 to 20.9	Displayed as 0 to 209
	16	%	Run CO_2	0 to 15	
	17	ppm	Run CO	0 to 999	
	18		Run exhaust temperature	0 to 999	for units see option 51 on MM
	19	%	Run efficiency	0 to 100	
	20	ppm	Run NO	0 to 999	
	21	ppm	Run SO_2	0 to 999	
	22	%	Comm. O_2	0 to 20.9	Displayed as 0 to 209
	23	%	Comm. CO_2	0 to 15	
	24	ppm	Comm. CO	0 to 999	
	25		Comm. exhaust temp	0 to 999	for units see option 51 on MM
	26	%	Comm. efficiency	0 to 100	
	27	ppm	Comm. NO	0 to 999	
	28	ppm	Comm. SO_2	0 to 999	
	29		EGA error number	0 to 25	see section 3.4.1 of manual
	30		Minimum required value		see option 30 on MM
	31		Maximum required value		see option 31 on MM
	32		Present flow units	0 to 999	
	33		Present flow thousands	0 to 999	
	34		Fuel 1 flow total units	0 to 999	
	35		Fuel 1 flow total units	0 to 999	
	36		Fuel 1 flow total thousands	0 to 999	
	37		Fuel 1 flow total millions	0 to 999	
	38		Fuel 2 flow total units	0 to 999	
	39		Fuel 2 flow total thousands	0 to 999	
	40		Fuel 2 flow total millions	0 to 999	
	41		Fuel 3 flow total units	0 to 999	
	42		Fuel 3 flow total thousands	0 to 999	

NPT	NPA	UNITS	DESCRIPTION	RANGE	NOTE
	43		Fuel 3 flow total millions	0 to 999	
	44		Channel 5 position	-6.0 to 96.0	Displayed as -60 to 960
	45		Channel 6 position	-6.0 to 96.0	Displayed as -60 to 960
	46		Channel 7 position	-6.0 to 90.0	Displayed as -60 to 960
	47		Channel 8 position	-6.0 to 96.0	Displayed as -60 to 960
	48		Not Used		
	49		Not Used		
	50		Not Used		
	51		Fuel 4 flow total units	0 to 999	
	52		Fuel 4 flow total thousands	0 to 999	
	53		Fuel 4 flow total millions	0 to 999	
	54		Channel 5 output	0 to 255	
	55		Channel 5 input	0 to 255	
	56		Channel 6 output	0 to 255	
	57		Channel 6 input	0 to 255	
	58		Option 1	3 to 8	See option table in manual
	59		Option 77	0 to 5	See option table in manual
	60		Option 90	0 to 1	See option table in manual
	61		Option 91	0 to 2	See option table in manual
	62		Option 92	1 to 200	See option table in manual
	63		Option 93	1 to 200	See option table in manual
	64		Option 94	0 to 2	See option table in manual
	65		Option 95	0 to 1	See option table in manual
	66		Option 96	0 to 200	See option table in manual
	67		Option 97	0 to 200	See option table in manual
	68		Not Used		
	69 70		Not Used Option 100	 0 to 1	 See option table in manual
	71		Option 101	0 to 2	See option table in manual
	72		Option 102	1 to 200	See option table in manual
	73		Option 103	1 to 200	See option table in manual
	74		Option 104	0 to 2	See option table in manual
	75		Option 105	0 to 1	See option table in manual
	76		Option 106	0 to 200	See option table in manual
	77		Option 107	0 to 200	See option table in manual
	78		Not Used		
	79		Not Used		
	80		Lockout Code	0 to 255	See option table in manual
	81		Option 71 Fuel 1 Type	0 to 3	0 = Fuel 1 (usually gas) 1 = Fuel 2 (usually oil) 2 = Fuel 3 (usually oil) 3 = Fuel 4 (Aux.)
	82		Option 72 Fuel 2 Type	0 to 3	0 = Fuel 1 (usually gas) 1 = Fuel 2 (usually oil) 2 = Fuel 3 (usually oil) 3 = Fuel 4 (Aux.)
	83		Option 73 Fuel 3 Type	0 to 3	0 = Fuel 1 (usually gas) 1 = Fuel 2 (usually oil) 2 = Fuel 3 (usually oil) 3 = Fuel 4 (Aux.)
	84		Option 74 Fuel 4 Type	0 to 3	0 = Fuel 1 (usually gas) 1 = Fuel 2 (usually oil) 2 = Fuel 3 (usually oil) 3 = Fuel 4 (Aux.)
	85		Option 61 Flow Units Fuel 1	0 to 4	0 = Cubic Feet 1 = Cubic Meters 2 = Kilograms 3 = Litres 4 = US Gallons

NPT	NPA	UNITS	DESCRIPTION	RANGE	NOTE
	86		Option 62 Flow Units Fuel 2	0 to 4	0 = Cubic Feet 1 = Cubic Meters 2 = Kilograms 3 = Litres 4 = US Gallons
	87		Option 63 Flow Units Fuel 3	0 to 4	0 = Cubic Feet 1 = Cubic Meters 2 = Kilograms 3 = Litres 4 = US Gallons
	88		Option 64 Flow Units Fuel 4	0 to 4	0 = Cubic Feet 1 = Cubic Meters 2 = Kilograms 3 = Litres 4 = US Gallons
	89		Fuel 1 Hours Run	0 to 9999	
	90		Fuel 2 Hours Run	0 to 9999	
	91		Fuel 3 Hours Run	0 to 9999	
	92		Fuel 4 Hours Run	0 to 9999	
	93		Fuel 1 Startups	0 to 999	
	94		Fuel 2 Startups	0 to 999	
	95		Fuel 3 Startups	0 to 999	
	96		Fuel 4 Startups	0 to 999	
	97		Air Pressure	0 to 999	See point 98 for units
	98		Air Pressure Coding	8 Bit Pattern	Bit_0 = 0 = off 1 = on Bit_1 = 0 = "WG 1 = mbar Bit_2 + Bit_3 = 00 = 0 decimal places 01 = 1 decimal places 10 = 2 decimal places 11 = 3 decimal places Bit_4 = unused Bit_5 = unused Bit_6 = unused Bit_7 = unused
	99		Gas Pressure	0 to 999	See point 100 for units
	100		Gas Pressure Coding	8 Bit Pattern	Bit_0 = 0 = off 1 = on Bit_1 + Bit_4 = 00 = "WG 10 = mbar 01 = BAR 11 = PSI Bit_2 + Bit_3 = 00 = 0 decimal places 01 = 1 decimal places 10 = 2 decimal places 11 = 3 decimal places Bit_5 = unused Bit_6 = unused Bit_7 = unused

NPT	NPA	UNITS	DESCRIPTION	RANGE	NOTE
	101		Fuel Selected	0 to 3	0 = Fuel 1 (usually gas) 1 = Fuel 2 (usually oil) 2 = Fuel 3 (usually oil) 3 = Fuel 4 (Aux.)
	102	%	E.G.A. O_2	0 to 20.9	Displayed as 0 to 209
	103	%	E.G.A. CO_2	0 to 15	
	104	ppm	E.G.A. CO	0 to 999	
	105	ppm	E.G.A. NO	0 to 999	
	106	ppm	E.G.A. SO_2	0 to 999	
	107		E.G.A. Exhaust temp	0 to 999	
	108	%	E.G.A. Efficiency	0 to 100	
	109		E.G.A. Error Number	0 to 25	
	110	%	E.G.A. Voltage Input	0 to 100	
	111		E.G.A. Exhaust ΔT	0 to 999	
	112		E.G.A. Ambient	0 to 50	
	113		E.G.A. Auxiliary Temp	0 to 9999	
	114		Service LEDS	8 Bit Pattern	Bit_0 to Bit_5 = 000000 = EGA requires servicing 000001 = 2 Months to service 000011 = 4 Months “” 000111 = 6 Months “” 001111 = 8 Months “” 011111 = 10 Months “” 111111 = 1 Year “” Bit_6 = 1 = System Fault Bit_7 = 1 = O.K. System Operates Correctly
BD	01		CR Relay status	1 = burner run 0 = burner off	
	02		Not used		
	03		Not used		
	04		Not used		
	05		Not used		
	06		Not used		
	07		Not used		
	08		Not used		
	09		Temp./Pressure	0 = Temp. 1 = Press.	
	10		Not used		
	11		Not used		
	12		Not used		
	13		Not used		
	14		Not used		
	15		Not used		
	16		Not used		
	17		Not used		
	18		Flow metering on	1 = yes 0 = no	
	19		CO displayed on F2/F3	1 = Displayed 0 = not displayed	
	20		Not used		
	21		°C or °F	1 = F 0 = C	
	22		Bar or PSI	1 = PSI 0 = Bar	
	23		External Voltage	1 = yes 0 = no	

NPT	NPA	UNITS	DESCRIPTION	RANGE	NOTE
	24		Not used		
	25		EGA optioned	1 = yes 0 = no	
	26		Actual up to trim threshold	1 = yes 0 = no	
	27		E.G.A. cooler ready	1 = yes 0 = no	
	28		E.G.A ambient temp OK	1 = yes 0 = no	
	29		Optioned to display NO	1 = yes 0 = no	
	30		Optioned to display SO_2	1 = yes 0 = no	
	31		E.G.A. ambient temp. low/high	1 = Hi 0 = Lo	
	32		Not used		
	33		Sequencing optioned	1 = yes 0 = no	
	34		Setpoint/Enable commands accepted	1 = yes 0 = no	
	35		Not used		
	36		Not used		
	37		Not used		
	38		Not used		
	39		Not used		
	40		Not used		
	41		Hand operation status	1 = Hand operation 0 = Modulating	
	42		Low flame hold status	1 = Low flame hold 0 = Modulating	
	43		Not used		
	44		Not used		
	45		Not used		
	46		Not used		
	47		MM working comms	1 = yes 0 = no	
	48		Input 41 set (lead boiler select)	1 = yes 0 = no	
	49		Lead boiler status	1 = Lead boiler. 0 = Not lead boiler.	
	50		'Disabled' status	1 = Disabled 0 = Enabled	
	57		Slave burner left/right	1 = 0 =	

In the case of ADI points 101 through 114, values correspond to an EGA address rather than an MM address. For example, address 1 would correspond to E.G.A. #1.

6.21.3.2 Network Point Table - Last/Eleventh Address (I/O values)

NPT	NPA	UNITS	DESCRIPTION	RANGE	NOTE
AI	Not used				
BI	Not used				
AO	Not used				
BO	Not used				
ADF	Not used				
ADI	01		MM 1 new required value	MM option 30/31	write only
	02		MM 2 new required value	MM option 30/31	write only
	03		MM 3 new required value	MM option 30/31	write only
	04		MM 4 new required value	MM option 30/31	write only
	05		MM 5 new required value	MM option 30/31	write only
	06		MM 6 new required value	MM option 30/31	write only
	07		MM 7 new required value	MM option 30/31	write only
	08		MM 8 new required value	MM option 30/31	write only
	09		MM 9 new required value	MM option 30/31	write only
	10		MM 10 new required value	MM option 30/31	write only
	11		Global required value		write only
	12		Lead boiler select	1 to 10	write only
	13		Number of MM's on system	1 to 10	write only
	14		Not used		
	15		Not used		
	16		Not used		
	17		Analog unit 1 output 1	0 to 255	read and write
	18		Analog unit 1 output 2	0 to 255	read and write
	19		Analog unit 1 output 3	0 to 255	read and write
	20		Analog unit 1 output 4	0 to 255	read and write
	21		Analog unit 1 output 5	0 to 255	read and write
	22		Analog unit 1 output 6	0 to 255	read and write
	23		Not used		
	24		Not used		
	25		Analog unit 2 output 1	0 to 255	read and write
	26		Analog unit 2 output 2	0 to 255	read and write
	27		Analog unit 2 output 3	0 to 255	read and write
	28		Analog unit 2 output 4	0 to 255	read and write
	29		Analog unit 2 output 5	0 to 255	read and write
	30		Analog unit 2 output 6	0 to 255	read and write
	31		Not used		
	32		Not used		
	33		Analog unit 3 output 1	0 to 255	read and write
	34		Analog unit 3 output 2	0 to 255	read and write
	35		Analog unit 3 output 3	0 to 255	read and write
	36		Analog unit 3 output 4	0 to 255	read and write
	37		Analog unit 3 output 5	0 to 255	read and write
	38		Analog unit 3 output 6	0 to 255	read and write
	39		Not used		
	40		Not used		
	41		Analog unit 4 output 1	0 to 255	read and write
	42		Analog unit 4 output 2	0 to 255	read and write
	43		Analog unit 4 output 3	0 to 255	read and write
	44		Analog unit 4 output 4	0 to 255	read and write
	45		Analog unit 4 output 5	0 to 255	read and write
	46		Analog unit 4 output 6	0 to 255	read and write
	47		Not used		
	48		Not used		
	49		Analog unit 5 output 1	0 to 255	read and write
	50		Analog unit 5 output 2	0 to 255	read and write
	51		Analog unit 5 output 3	0 to 255	read and write
	52		Analog unit 5 output 4	0 to 255	read and write

NPT	NPA	UNITS	DESCRIPTION	RANGE	NOTE
	53		Analog unit 5 output 5	0 to 255	read and write
	54		Analog unit 5 output 6	0 to 255	read and write
	55		Not used		
	56		Not used		
	57		Analog unit 6 output 1	0 to 255	read and write
	58		Analog unit 6 output 2	0 to 255	read and write
	59		Analog unit 6 output 3	0 to 255	read and write
	60		Analog unit 6 output 4	0 to 255	read and write
	61		Analog unit 6 output 5	0 to 255	read and write
	62		Analog unit 6 output 6	0 to 255	read and write
	63		Not used		
	64		Not used		
	65		Analog unit 7 output 1	0 to 255	read and write
	66		Analog unit 7 output 2	0 to 255	read and write
	67		Analog unit 7 output 3	0 to 255	read and write
	68		Analog unit 7 output 4	0 to 255	read and write
	69		Analog unit 7 output 5	0 to 255	read and write
	70		Analog unit 7 output 6	0 to 255	read and write
	71		Not used		
	72		Not used		
	73		Analog unit 8 output 1	0 to 255	read and write
	74		Analog unit 8 output 2	0 to 255	read and write
	75		Analog unit 8 output 3	0 to 255	read and write
	76		Analog unit 8 output 4	0 to 255	read and write
	77		Analog unit 8 output 5	0 to 255	read and write
	78		Analog unit 8 output 6	0 to 255	read and write
	79		Not used		
	80		Not used		
	81		Analog unit 9 output 1	0 to 255	read and write
	82		Analog unit 9 output 2	0 to 255	read and write
	83		Analog unit 9 output 3	0 to 255	read and write
	84		Analog unit 9 output 4	0 to 255	read and write
	85		Analog unit 9 output 5	0 to 255	read and write
	86		Analog unit 9 output 6	0 to 255	read and write
	87		Not used		
	88		Not used		
	89		Analog unit 10 output 1	0 to 255	read and write
	90		Analog unit 10 output 2	0 to 255	read and write
	91		Analog unit 10 output 3	0 to 255	read and write
	92		Analog unit 10 output 4	0 to 255	read and write
	93		Analog unit 10 output 5	0 to 255	read and write
	94		Analog unit 10 output 6	0 to 255	read and write
	95		Not used		
	96		Not used		
	97		Not used		
	98		Not used		
	99		Not used		
	100		Not used		
	101		Not used		
	102		Not used		
	103		Not used		
	104		Not used		
	105		Not used		
	106		Not used		
	107		Not used		
	108		Not used		
	109		Not used		

NPT	NPA	UNITS	DESCRIPTION	RANGE	NOTE
	110		Not used		
	111		Not used		
	112		Analog unit 1 input 1	0 to 255	read only
	113		Analog unit 1 input 2	0 to 255	read only
	114		Analog unit 1 input 3	0 to 255	read only
	115		Analog unit 1 input 4	0 to 255	read only
	116		Analog unit 1 input 5	0 to 255	read only
	117		Analog unit 1 input 6	0 to 255	read only
	118		Not used		
	119		Not used		
	120		Analog unit 2 input 1	0 to 255	read only
	121		Analog unit 2 input 2	0 to 255	read only
	122		Analog unit 2 input 3	0 to 255	read only
	123		Analog unit 2 input 4	0 to 255	read only
	124		Analog unit 2 input 5	0 to 255	read only
	125		Analog unit 2 input 6	0 to 255	read only
	126		Not used		
	127		Not used		
	128		Analog unit 3 input 1	0 to 255	read only
	129		Analog unit 3 input 2	0 to 255	read only
	130		Analog unit 3 input 3	0 to 255	read only
	131		Analog unit 3 input 4	0 to 255	read only
	132		Analog unit 3 input 5	0 to 255	read only
	133		Analog unit 3 input 6	0 to 255	read only
	134		Not used		
	135		Not used		
	136		Analog unit 4 input 1	0 to 255	read only
	137		Analog unit 4 input 2	0 to 255	read only
	138		Analog unit 4 input 3	0 to 255	read only
	139		Analog unit 4 input 4	0 to 255	read only
	140		Analog unit 4 input 5	0 to 255	read only
	141		Analog unit 4 input 6	0 to 255	read only
	142		Not used		
	143		Not used		
	144		Analog unit 5 input 1	0 to 255	read only
	145		Analog unit 5 input 2	0 to 255	read only
	146		Analog unit 5 input 3	0 to 255	read only
	147		Analog unit 5 input 4	0 to 255	read only
	148		Analog unit 5 input 5	0 to 255	read only
	149		Analog unit 5 input 6	0 to 255	read only
	150		Not used		
	151		Not used		
	152		Analog unit 6 input 1	0 to 255	read only
	153		Analog unit 6 input 2	0 to 255	read only
	154		Analog unit 6 input 3	0 to 255	read only
	155		Analog unit 6 input 4	0 to 255	read only
	156		Analog unit 6 input 5	0 to 255	read only
	157		Analog unit 6 input 6	0 to 255	read only
	158		Not used		
	159		Not used		
	160		Analog unit 7 input 1	0 to 255	read only
	161		Analog unit 7 input 2	0 to 255	read only
	162		Analog unit 7 input 3	0 to 255	read only
	163		Analog unit 7 input 4	0 to 255	read only
	164		Analog unit 7 input 5	0 to 255	read only
	165		Analog unit 7 input 6	0 to 255	read only
	166		Not used		

NPT	NPA	UNITS	DESCRIPTION	RANGE	NOTE
	167		Not used		
	168		Analog unit 8 input 1	0 to 255	read only
	169		Analog unit 8 input 2	0 to 255	read only
	170		Analog unit 8 input 3	0 to 255	read only
	171		Analog unit 8 input 4	0 to 255	read only
	172		Analog unit 8 input 5	0 to 255	read only
	173		Analog unit 8 input 6	0 to 255	read only
	174		Not used		
	175		Not used		
	176		Analog unit 9 input 1	0 to 255	read only
	177		Analog unit 9 input 2	0 to 255	read only
	178		Analog unit 9 input 3	0 to 255	read only
	179		Analog unit 9 input 4	0 to 255	read only
	180		Analog unit 9 input 5	0 to 255	read only
	181		Analog unit 9 input 6	0 to 255	read only
	182		Not used		
	183		Not used		
	184		Analog unit 10 input 1	0 to 255	read only
	185		Analog unit 10 input 2	0 to 255	read only
	186		Analog unit 10 input 3	0 to 255	read only
	187		Analog unit 10 input 4	0 to 255	read only
	188		Analog unit 10 input 5	0 to 255	read only
	189		Analog unit 10 input 6	0 to 255	read only
BD	01		Digital unit 1 input 1	0 or 1	see digital unit setup
	02		Digital unit 1 input 2	0 or 1	see digital unit setup
	03		Digital unit 1 input 3	0 or 1	see digital unit setup
	04		Digital unit 1 input 4	0 or 1	see digital unit setup
	05		Digital unit 1 input 5	0 or 1	see digital unit setup
	06		Digital unit 1 input 6	0 or 1	see digital unit setup
	07		Digital unit 1 input 7	0 or 1	see digital unit setup
	08		Digital unit 1 input 8	0 or 1	see digital unit setup
	09		Digital unit 1 input 9	0 or 1	see digital unit setup
	10		Digital unit 1 input 10	0 or 1	see digital unit setup
	11		Digital unit 1 input 11	0 or 1	see digital unit setup
	12		Digital unit 1 input 12	0 or 1	see digital unit setup
	13		Digital unit 1 input 13	0 or 1	see digital unit setup
	14		Digital unit 1 input 14	0 or 1	see digital unit setup
	15		Digital unit 1 input 15	0 or 1	see digital unit setup
	16		Digital unit 1 input 16	0 or 1	see digital unit setup
	17		Digital unit 2 input 1	0 or 1	see digital unit setup
	18		Digital unit 2 input 2	0 or 1	see digital unit setup
	19		Digital unit 2 input 3	0 or 1	see digital unit setup
	20		Digital unit 2 input 4	0 or 1	see digital unit setup
	21		Digital unit 2 input 5	0 or 1	see digital unit setup
	22		Digital unit 2 input 6	0 or 1	see digital unit setup
	23		Digital unit 2 input 7	0 or 1	see digital unit setup
	24		Digital unit 2 input 8	0 or 1	see digital unit setup
	25		Digital unit 2 input 9	0 or 1	see digital unit setup
	26		Digital unit 2 input 10	0 or 1	see digital unit setup
	27		Digital unit 2 input 11	0 or 1	see digital unit setup
	28		Digital unit 2 input 12	0 or 1	see digital unit setup
	29		Digital unit 2 input 13	0 or 1	see digital unit setup
	30		Digital unit 2 input 14	0 or 1	see digital unit setup
	31		Digital unit 2 input 15	0 or 1	see digital unit setup
	32		Digital unit 2 input 16	0 or 1	see digital unit setup
	33		Digital unit 3 input 1	0 or 1	see digital unit setup
	34		Digital unit 3 input 2	0 or 1	see digital unit setup

NPT	NPA	UNITS	DESCRIPTION	RANGE	NOTE
	35		Digital unit 3 input 3	0 or 1	see digital unit setup
	36		Digital unit 3 input 4	0 or 1	see digital unit setup
	37		Digital unit 3 input 5	0 or 1	see digital unit setup
	38		Digital unit 3 input 6	0 or 1	see digital unit setup
	39		Digital unit 3 input 7	0 or 1	see digital unit setup
	40		Digital unit 3 input 8	0 or 1	see digital unit setup
	41		Digital unit 3 input 9	0 or 1	see digital unit setup
	42		Digital unit 3 input 10	0 or 1	see digital unit setup
	43		Digital unit 3 input 11	0 or 1	see digital unit setup
	44		Digital unit 3 input 12	0 or 1	see digital unit setup
	45		Digital unit 3 input 13	0 or 1	see digital unit setup
	46		Digital unit 3 input 14	0 or 1	see digital unit setup
	47		Digital unit 3 input 15	0 or 1	see digital unit setup
	48		Digital unit 3 input 16	0 or 1	see digital unit setup
	49		Digital unit 4 input 1	0 or 1	see digital unit setup
	50		Digital unit 4 input 2	0 or 1	see digital unit setup
	51		Digital unit 4 input 3	0 or 1	see digital unit setup
	52		Digital unit 4 input 4	0 or 1	see digital unit setup
	53		Digital unit 4 input 5	0 or 1	see digital unit setup
	54		Digital unit 4 input 6	0 or 1	see digital unit setup
	55		Digital unit 4 input 7	0 or 1	see digital unit setup
	56		Digital unit 4 input 8	0 or 1	see digital unit setup
	57		Digital unit 4 input 9	0 or 1	see digital unit setup
	58		Digital unit 4 input 10	0 or 1	see digital unit setup
	59		Digital unit 4 input 11	0 or 1	see digital unit setup
	60		Digital unit 4 input 12	0 or 1	see digital unit setup
	61		Digital unit 4 input 13	0 or 1	see digital unit setup
	62		Digital unit 4 input 14	0 or 1	see digital unit setup
	63		Digital unit 4 input 15	0 or 1	see digital unit setup
	64		Digital unit 4 input 16	0 or 1	see digital unit setup
	65		Digital unit 5 input 1	0 or 1	see digital unit setup
	66		Digital unit 5 input 2	0 or 1	see digital unit setup
	67		Digital unit 5 input 3	0 or 1	see digital unit setup
	68		Digital unit 5 input 4	0 or 1	see digital unit setup
	69		Digital unit 5 input 5	0 or 1	see digital unit setup
	70		Digital unit 5 input 6	0 or 1	see digital unit setup
	71		Digital unit 5 input 7	0 or 1	see digital unit setup
	72		Digital unit 5 input 8	0 or 1	see digital unit setup
	73		Digital unit 5 input 9	0 or 1	see digital unit setup
	74		Digital unit 5 input 10	0 or 1	see digital unit setup
	75		Digital unit 5 input 11	0 or 1	see digital unit setup
	76		Digital unit 5 input 12	0 or 1	see digital unit setup
	77		Digital unit 5 input 13	0 or 1	see digital unit setup
	78		Digital unit 5 input 14	0 or 1	see digital unit setup
	79		Digital unit 5 input 15	0 or 1	see digital unit setup
	80		Digital unit 5 input 16	0 or 1	see digital unit setup
	81		Digital unit 6 input 1	0 or 1	see digital unit setup
	82		Digital unit 6 input 2	0 or 1	see digital unit setup
	83		Digital unit 6 input 3	0 or 1	see digital unit setup
	84		Digital unit 6 input 4	0 or 1	see digital unit setup
	85		Digital unit 6 input 5	0 or 1	see digital unit setup
	86		Digital unit 6 input 6	0 or 1	see digital unit setup
	87		Digital unit 6 input 7	0 or 1	see digital unit setup
	88		Digital unit 6 input 8	0 or 1	see digital unit setup
	89		Digital unit 6 input 9	0 or 1	see digital unit setup
	90		Digital unit 6 input 10	0 or 1	see digital unit setup
	91		Digital unit 6 input 11	0 or 1	see digital unit setup

NPT	NPA	UNITS	DESCRIPTION	RANGE	NOTE
	92		Digital unit 6 input 12	0 or 1	see digital unit setup
	93		Digital unit 6 input 13	0 or 1	see digital unit setup
	94		Digital unit 6 input 14	0 or 1	see digital unit setup
	95		Digital unit 6 input 15	0 or 1	see digital unit setup
	96		Digital unit 6 input 16	0 or 1	see digital unit setup
	97		Digital unit 7 input 1	0 or 1	see digital unit setup
	98		Digital unit 7 input 2	0 or 1	see digital unit setup
	99		Digital unit 7 input 3	0 or 1	see digital unit setup
	100		Digital unit 7 input 4	0 or 1	see digital unit setup
	101		Digital unit 7 input 5	0 or 1	see digital unit setup
	102		Digital unit 7 input 6	0 or 1	see digital unit setup
	103		Digital unit 7 input 7	0 or 1	see digital unit setup
	104		Digital unit 7 input 8	0 or 1	see digital unit setup
	105		Digital unit 7 input 9	0 or 1	see digital unit setup
	106		Digital unit 7 input 10	0 or 1	see digital unit setup
	107		Digital unit 7 input 11	0 or 1	see digital unit setup
	108		Digital unit 7 input 12	0 or 1	see digital unit setup
	109		Digital unit 7 input 13	0 or 1	see digital unit setup
	110		Digital unit 7 input 14	0 or 1	see digital unit setup
	111		Digital unit 7 input 15	0 or 1	see digital unit setup
	112		Digital unit 7 input 16	0 or 1	see digital unit setup
	113		Digital unit 8 input 1	0 or 1	see digital unit setup
	114		Digital unit 8 input 2	0 or 1	see digital unit setup
	115		Digital unit 8 input 3	0 or 1	see digital unit setup
	116		Digital unit 8 input 4	0 or 1	see digital unit setup
	117		Digital unit 8 input 5	0 or 1	see digital unit setup
	118		Digital unit 8 input 6	0 or 1	see digital unit setup
	119		Digital unit 8 input 7	0 or 1	see digital unit setup
	120		Digital unit 8 input 8	0 or 1	see digital unit setup
	121		Digital unit 8 input 9	0 or 1	see digital unit setup
	122		Digital unit 8 input 10	0 or 1	see digital unit setup
	123		Digital unit 8 input 11	0 or 1	see digital unit setup
	124		Digital unit 8 input 12	0 or 1	see digital unit setup
	125		Digital unit 8 input 13	0 or 1	see digital unit setup
	126		Digital unit 8 input 14	0 or 1	see digital unit setup
	127		Digital unit 8 input 15	0 or 1	see digital unit setup
	128		Digital unit 8 input 16	0 or 1	see digital unit setup
	129		Digital unit 9 input 1	0 or 1	see digital unit setup
	130		Digital unit 9 input 2	0 or 1	see digital unit setup
	131		Digital unit 9 input 3	0 or 1	see digital unit setup
	132		Digital unit 9 input 4	0 or 1	see digital unit setup
	133		Digital unit 9 input 5	0 or 1	see digital unit setup
	134		Digital unit 9 input 6	0 or 1	see digital unit setup
	135		Digital unit 9 input 7	0 or 1	see digital unit setup
	136		Digital unit 9 input 8	0 or 1	see digital unit setup
	137		Digital unit 9 input 9	0 or 1	see digital unit setup
	138		Digital unit 9 input 10	0 or 1	see digital unit setup
	139		Digital unit 9 input 11	0 or 1	see digital unit setup
	140		Digital unit 9 input 12	0 or 1	see digital unit setup
	141		Digital unit 9 input 13	0 or 1	see digital unit setup
	142		Digital unit 9 input 14	0 or 1	see digital unit setup
	143		Digital unit 9 input 15	0 or 1	see digital unit setup
	144		Digital unit 9 input 16	0 or 1	see digital unit setup
	145		Digital unit 10 input 1	0 or 1	see digital unit setup
	146		Digital unit 10 input 2	0 or 1	see digital unit setup
	147		Digital unit 10 input 3	0 or 1	see digital unit setup
	148		Digital unit 10 input 4	0 or 1	see digital unit setup

NPT	NPA	UNITS	DESCRIPTION	RANGE	NOTE
	149		Digital unit 10 input 5	0 or 1	see digital unit setup
	150		Digital unit 10 input 6	0 or 1	see digital unit setup
	151		Digital unit 10 input 7	0 or 1	see digital unit setup
	152		Digital unit 10 input 8	0 or 1	see digital unit setup
	153		Digital unit 10 input 9	0 or 1	see digital unit setup
	154		Digital unit 10 input 10	0 or 1	see digital unit setup
	155		Digital unit 10 input 11	0 or 1	see digital unit setup
	156		Digital unit 10 input 12	0 or 1	see digital unit setup
	157		Digital unit 10 input 13	0 or 1	see digital unit setup
	158		Digital unit 10 input 14	0 or 1	see digital unit setup
	159		Digital unit 10 input 15	0 or 1	see digital unit setup
	160		Digital unit 10 input 16	0 or 1	see digital unit setup
	161		MM 1 on/off line status	0 = off line 1 = on line	
	162		MM 2 on/off line status	0 = off line 1 = on line	
	163		MM 3 on/off line status	0 = off line 1 = on line	
	164		MM 4 on/off line status	0 = off line 1 = on line	
	165		MM 5 on/off line status	0 = off line 1 = on line	
	166		MM 6 on/off line status	0 = off line 1 = on line	
	167		MM 7 on/off line status	0 = off line 1 = on line	
	168		MM 8 on/off line status	0 = off line 1 = on line	
	169		MM 9 on/off line status	0 = off line 1 = on line	
	170		MM 10 on/off line status	0 = off line 1 = on line	
	171		Not used		
	172		Not used		
	173		Not used		
	174		Not used		
	175		Not used		
	176		Not used		
	177		Not used		
	178		Not used		
	179		Not used		
	180		Not used		
	181		Not used		
	182		Not used		
	183		Not used		
	184		Not used		
	185		Not used		
	186		Not used		
	187		Not used		
	188		Not used		
	189		Not used		
	190		Not used		
	191		Not used		
	192		Not used		
	193		Digital unit 1 on/off line status	0 = off line 1 = on line	read only
	194		Digital unit 2 on/off line status	0 = off line 1 = on line	read only

NPT	NPA	UNITS	DESCRIPTION	RANGE	NOTE
	195		Digital unit 3 on/off line status	0 = off line 1 = on line	read only
	196		Digital unit 4 on/off line status	0 = off line 1 = on line	read only
	197		Digital unit 5 on/off line status	0 = off line 1 = on line	read only
	198		Digital unit 6 on/off line status	0 = off line 1 = on line	read only
	199		Digital unit 7 on/off line status	0 = off line 1 = on line	read only
	200		Digital unit 8 on/off line status	0 = off line 1 = on line	read only
	201		Digital unit 9 on/off line status	0 = off line 1 = on line	read only
	202		Digital unit 10 on/off line status	0 = off line 1 = on line	read only
	203		Not used		
	204		Not used		
	205		Not used		
	206		Not used		
	207		Not used		
	208		Not used		
	209		Analog unit 1 on/off line status	0 = off line 1 = on line	read only
	210		Analog unit 2 on/off line status	0 = off line 1 = on line	read only
	211		Analog unit 3 on/off line status	0 = off line 1 = on line	read only
	212		Analog unit 4 on/off line status	0 = off line 1 = on line	read only
	213		Analog unit 5 on/off line status	0 = off line 1 = on line	read only
	214		Analog unit 6 on/off line status	0 = off line 1 = on line	read only
	215		Analog unit 7 on/off line status	0 = off line 1 = on line	read only
	216		Analog unit 8 on/off line status	0 = off line 1 = on line	read only
	217		Analog unit 9 on/off line status	0 = off line 1 = on line	read only
	218		Analog unit 10 on/off line status	0 = off line 1 = on line	read only
	1		MM 1 Enable/disable	1 = off line 0 = on line	write only
	2		MM 2 Enable/disable	1 = off line 0 = on line	write only
	3		MM 3 Enable/disable	1 = off line 0 = on line	write only
	4		MM 4 Enable/disable	1 = off line 0 = on line	write only
	5		MM 5 Enable/disable	1 = off line 0 = on line	write only
	6		MM 6 Enable/disable	1 = off line 0 = on line	write only
	7		MM 7 Enable/disable	1 = off line 0 = on line	writ only
	8		MM 8 Enable/disable	1 = off line 0 = on line	write only

NPT	NPA	UNITS	DESCRIPTION	RANGE	NOTE
	9		MM 9 Enable/disable	1 = off line 0 = on line	write only
	10		MM 10 Enable/disable	1 = off line 0 = on line	write only
	11		Not used		
	12		Not used		
	13		Not used		
	14		Not used		
	15		Not used		
	16		Not used		
	17		Digital unit 1 output 1	0 = off, 1 = on	write only
	18		Digital unit 1 output 2	0 = off, 1 = on	write only
	19		Digital unit 1 output 3	0 = off, 1 = on	write only
	20		Digital unit 1 output 4	0 = off, 1 = on	write only
	21		Digital unit 1 output 5	0 = off, 1 = on	write only
	22		Digital unit 1 output 6	0 = off, 1 = on	write only
	23		Digital unit 1 output 7	0 = off, 1 = on	write only
	24		Digital unit 1 output 8	0 = off, 1 = on	write only
	25		Digital unit 2 output 1	0 = off, 1 = on	write only
	26		Digital unit 2 output 2	0 = off, 1 = on	write only
	27		Digital unit 2 output 3	0 = off, 1 = on	write only
	28		Digital unit 2 output 4	0 = off, 1 = on	write only
	29		Digital unit 2 output 5	0 = off, 1 = on	write only
	30		Digital unit 2 output 6	0 = off, 1 = on	write only
	31		Digital unit 2 output 7	0 = off, 1 = on	write only
	32		Digital unit 2 output 8	0 = off, 1 = on	write only
	33		Digital unit 3 output 1	0 = off, 1 = on	write only
	34		Digital unit 3 output 2	0 = off, 1 = on	write only
	35		Digital unit 3 output 3	0 = off, 1 = on	write only
	36		Digital unit 3 output 4	0 = off, 1 = on	write only
	37		Digital unit 3 output 5	0 = off, 1 = on	write only
	38		Digital unit 3 output 6	0 = off, 1 = on	write only
	39		Digital unit 3 output 7	0 = off, 1 = on	write only
	40		Digital unit 3 output 8	0 = off, 1 = on	write only
	41		Digital unit 4 output 1	0 = off, 1 = on	write only
	42		Digital unit 4 output 2	0 = off, 1 = on	write only
	43		Digital unit 4 output 3	0 = off, 1 = on	write only
	44		Digital unit 4 output 4	0 = off, 1 = on	write only
	45		Digital unit 4 output 5	0 = off, 1 = on	write only
	46		Digital unit 4 output 6	0 = off, 1 = on	write only
	47		Digital unit 4 output 7	0 = off, 1 = on	write only
	48		Digital unit 4 output 8	0 = off, 1 = on	write only
	49		Digital unit 5 output 1	0 = off, 1 = on	write only
	50		Digital unit 5 output 2	0 = off, 1 = on	write only
	51		Digital unit 5 output 3	0 = off, 1 = on	write only
	52		Digital unit 5 output 4	0 = off, 1 = on	write only
	53		Digital unit 5 output 5	0 = off, 1 = on	write only
	54		Digital unit 5 output 6	0 = off, 1 = on	write only
	55		Digital unit 5 output 7	0 = off, 1 = on	write only
	56		Digital unit 5 output 8	0 = off, 1 = on	write only
	57		Digital unit 6 output 1	0 = off, 1 = on	write only
	58		Digital unit 6 output 2	0 = off, 1 = on	write only
	59		Digital unit 6 output 3	0 = off, 1 = on	write only
	60		Digital unit 6 output 4	0 = off, 1 = on	write only
	61		Digital unit 6 output 5	0 = off, 1 = on	write only
	62		Digital unit 6 output 6	0 = off, 1 = on	write only
	63		Digital unit 6 output 7	0 = off, 1 = on	write only

NPT	NPA	UNITS	DESCRIPTION	RANGE	NOTE
	64		Digital unit 6 output 8	0 = off, 1 = on	write only
	65		Digital unit 7 output 1	0 = off, 1 = on	write only
	66		Digital unit 7 output 2	0 = off, 1 = on	write only
	67		Digital unit 7 output 3	0 = off, 1 = on	write only
	68		Digital unit 7 output 4	0 = off, 1 = on	write only
	69		Digital unit 7 output 5	0 = off, 1 = on	write only
	70		Digital unit 7 output 6	0 = off, 1 = on	write only
	71		Digital unit 7 output 7	0 = off, 1 = on	write only
	72		Digital unit 7 output 8	0 = off, 1 = on	write only
	73		Digital unit 8 output 1	0 = off, 1 = on	write only
	74		Digital unit 8 output 2	0 = off, 1 = on	write only
	75		Digital unit 8 output 3	0 = off, 1 = on	write only
	76		Digital unit 8 output 4	0 = off, 1 = on	write only
	77		Digital unit 8 output 5	0 = off, 1 = on	write only
	78		Digital unit 8 output 6	0 = off, 1 = on	write only
	79		Digital unit 8 output 7	0 = off, 1 = on	write only
	80		Digital unit 8 output 8	0 = off, 1 = on	write only
	81		Digital unit 9 output 1	0 = off, 1 = on	write only
	82		Digital unit 9 output 2	0 = off, 1 = on	write only
	83		Digital unit 9 output 3	0 = off, 1 = on	write only
	84		Digital unit 9 output 4	0 = off, 1 = on	write only
	85		Digital unit 9 output 5	0 = off, 1 = on	write only
	86		Digital unit 9 output 6	0 = off, 1 = on	write only
	87		Digital unit 9 output 7	0 = off, 1 = on	write only
	88		Digital unit 9 output 8	0 = off, 1 = on	write only
	89		Digital unit 10 output 1	0 = off, 1 = on	write only
	90		Digital unit 10 output 2	0 = off, 1 = on	write only
	91		Digital unit 10 output 3	0 = off, 1 = on	write only
	92		Digital unit 10 output 4	0 = off, 1 = on	write only
	93		Digital unit 10 output 5	0 = off, 1 = on	write only
	94		Digital unit 10 output 6	0 = off, 1 = on	write only
	95		Digital unit 10 output 7	0 = off, 1 = on	write only
	96		Digital unit 10 output 8	0 = off, 1 = on	write only

6.20 OTHER INFORMATION AND ILLUSTRATIONS

6.20.1 Loop Back Test

A facility exists which enables the hardware connection to the RS-232 PC port and the RS-422 port to be checked.

On the dual inline switch (switch bank 2) set way 5 on and all other ways off.

Any character on the receive line is then echoed back immediately on the transmit line.

This facility is intended to be used in conjunction with a terminal emulator, such Hyperterminal (hypertrm.exe) which is included with Windows.

The communications settings should be as follows:

Bits per second: 9600
Data bits: 8
Parity: none
Stop bits: 1
Flow control: None (i.e. no hardware or software flow control)

Full duplex.

6.20.2 Communication Interfaces

This page is for information only.

RS 232

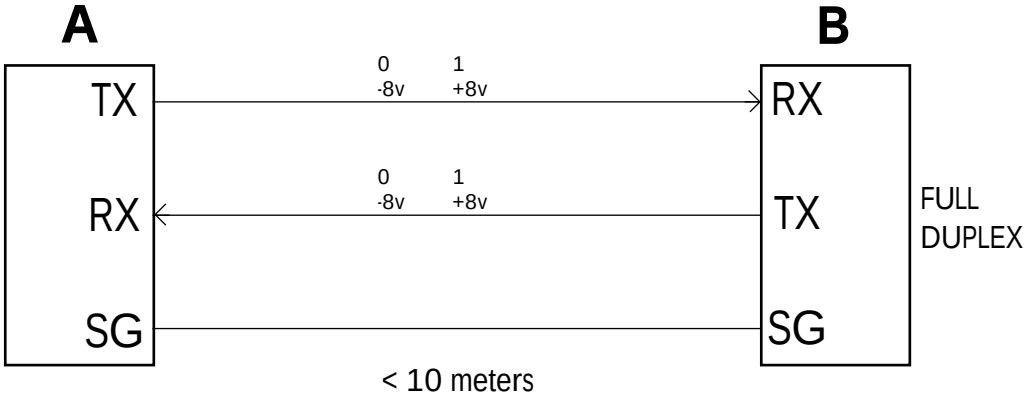

RS 422

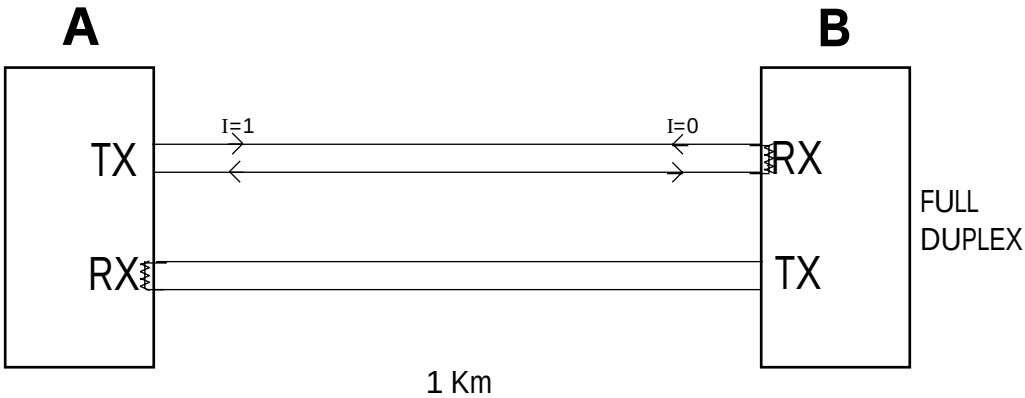

RS 485

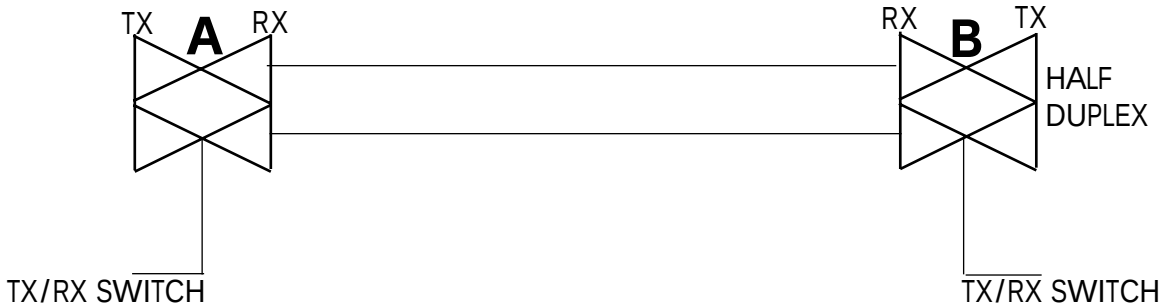

Example of a network

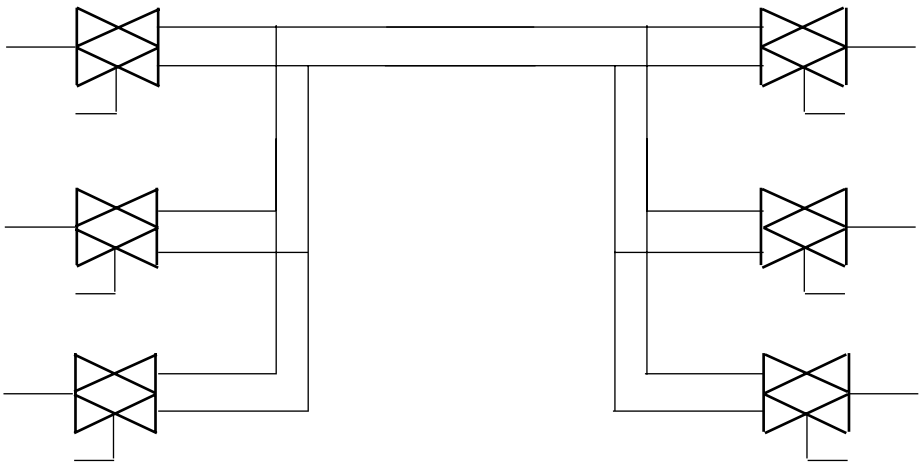

Section 7: Application Possibilities for M.M./E.G.A.

7.1 APPLICATION POSSIBILITIES FOR M.M. /E.G.A. SYSTEM

The M.M. system is basically an air/fuel ratio control designed to improve the energy efficiency and control of a standard pressure jet or rotary burner. The ability to control up to 6 channels however greatly expands the areas in which it can be used and any application in which it is necessary to precisely mix fuel and air from up to 6 sources is a possibility.

Pressure Jet/Gun Type Burners

The simplest system requiring only two servo motors for control. The energy saving benefits come from four sources:

a.) Elimination of mechanical hysteresis due to cams and linkages;

b.) Precise control of the air/fuel ratio throughout the combustion range without the compromises which limit a cam.

c.) Control of the output to ±1 degree C. (± 2 degrees F.) or ±1.5 psi via the PID controller, eliminating the wastage or pressure higher than required.

d.) No compromise required when changing between fuels since the air/fuel ratio for each are completely seperate.

7.2 APPLICATION POSSIBILITIES FOR M.M. /E.G.A. SYSTEM

Rotary Burners

The M.M. system is basically an air/fuel ratio control designed to improve the energy efficiency and control of a standard pressure jet or rotary burner.

The ability to control up to 6 channels however greatly expands the areas in which it can be used. Any application in which it is necessary to precisely mix fuel and air from up to 8 sources is a possibility and one of the possible applications is the use of rotary burners.

The benefits of this system are similar to that of pressure jet/gun burners but by utilising the third channel , to control the primary air supply, the best possible mixing is achieved. The energy saving benefits are as follows:

a.) Elimination of mechanical hysteresis due to cams and linkages;

b.) Precise control of the air/fuel ratio throughout the combustion range without the compromises which limit a cam.

c.) Control of the output to ±1 degree C. (± 2 degrees F.) or ± 1.5 psi via the P.I.D. controller, eliminating the wastage or pressure higher than required.

d.) No compromise required when changing between fuels since the air/fuel ratio for each are completely seperate.

LAYOUT OF DUAL FUEL ROTARY CUP
BURNER CONTROLS & M.M. SYSTEM

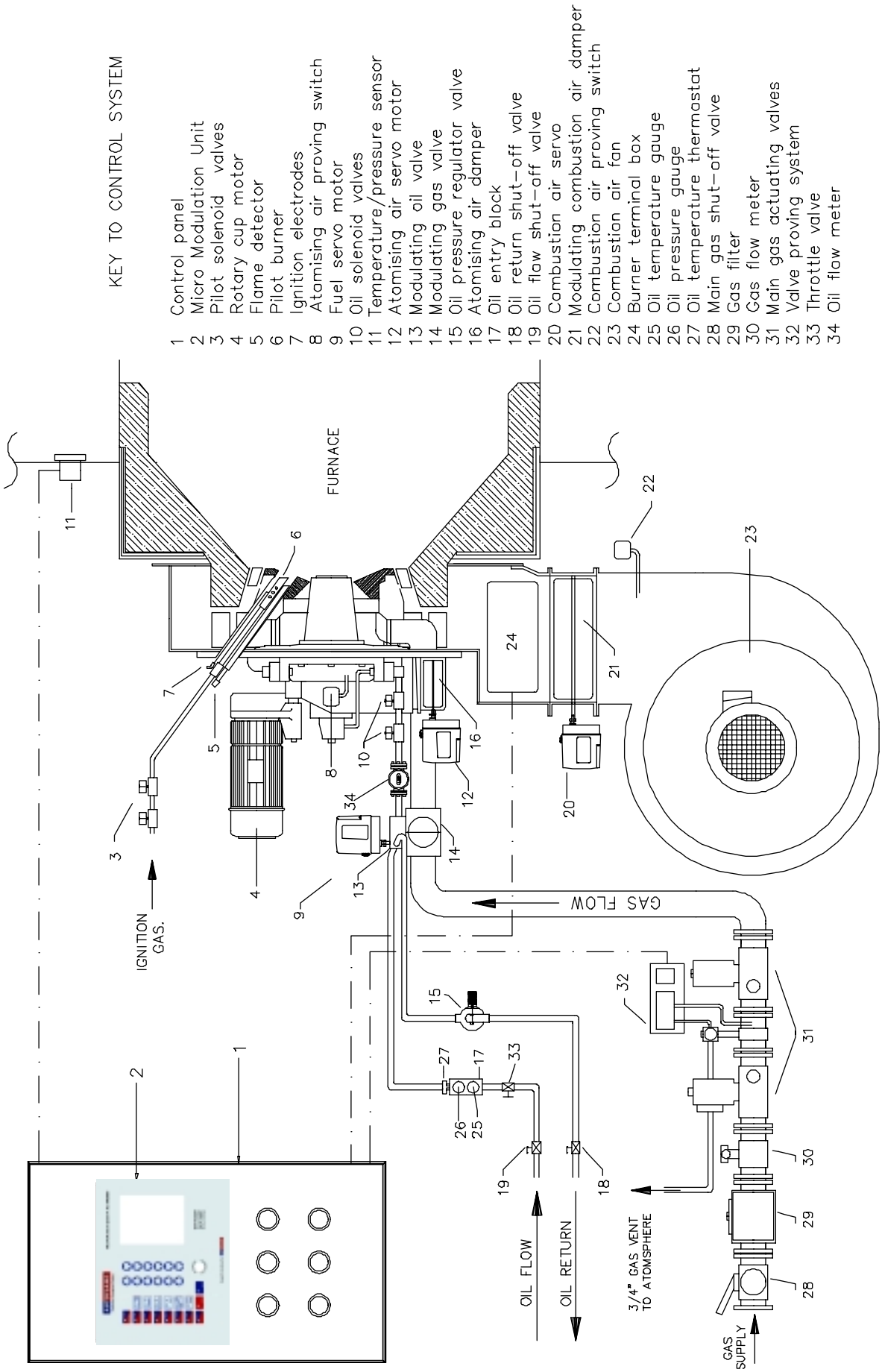

7.3 APPLICATION POSSIBILITIES FOR M.M. /E.G.A. SYSTEM

Flue Gas Re-Circulation Control (NOx)

The M.M. system is basically an air/fuel ratio control designed to improve the energy efficiency and control of a standard pressure jet or rotary burner. The ability to control up to 8 channels however greatly expands the areas in which it can be used and any application in which it is necessary to precisely mix fuel and air from up to 6 sources is a possibility.

The additional channels can be used to control a recirculation damper which is a common method in the control of NOX production. As with most forms of NOX control this method reduces the temperature in the combustion chamber and hence reduces thermal efficiency. Use of the M.M./E.G.A. will minimise the excess air to the burner which itself reduces NOX and will also affect some of this loss of efficiency.

7.4 APPLICATION POSSIBILITIES FOR M.M. /E.G.A. SYSTEM

Steam Generator Feed Water Control

The M.M. system is basically an air/fuel ratio control designed to improve the energy efficiency and control of a standard pressure jet or rotary burner. The ability to control up to 8 channels however greatly expands the areas in which it can be used and any application in which it is necessary to precisely mix fuel and air from up to 6 sources is a possibility.

7.5 APPLICATION POSSIBILITIES FOR M.M. /E.G.A. SYSTEM

Water Injection

The M.M. system is basically an air/fuel ratio control designed to improve the energy efficiency and control of a standard pressure jet or rotary burner. The ability to control up to 8 channels however greatly expands the areas in which it can be used and any application in which it is necessary to precisely mix fuel and air from up to 6 sources is a possibility.

The 3rd channel can be used in this instance to control the water injection.

7.7.1 MK6 MM/EGA

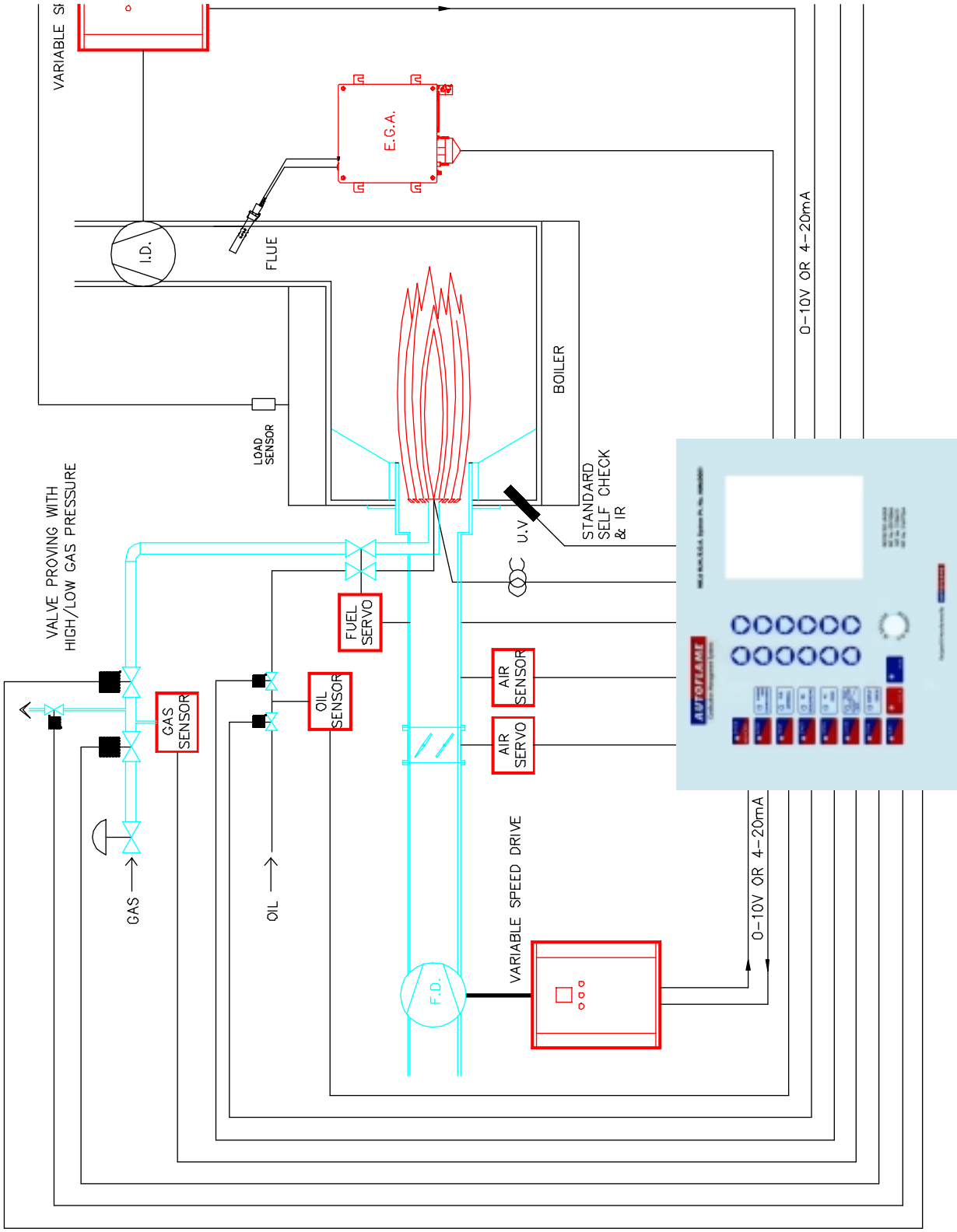

7.7.2 MINI MK6 MM/EGA

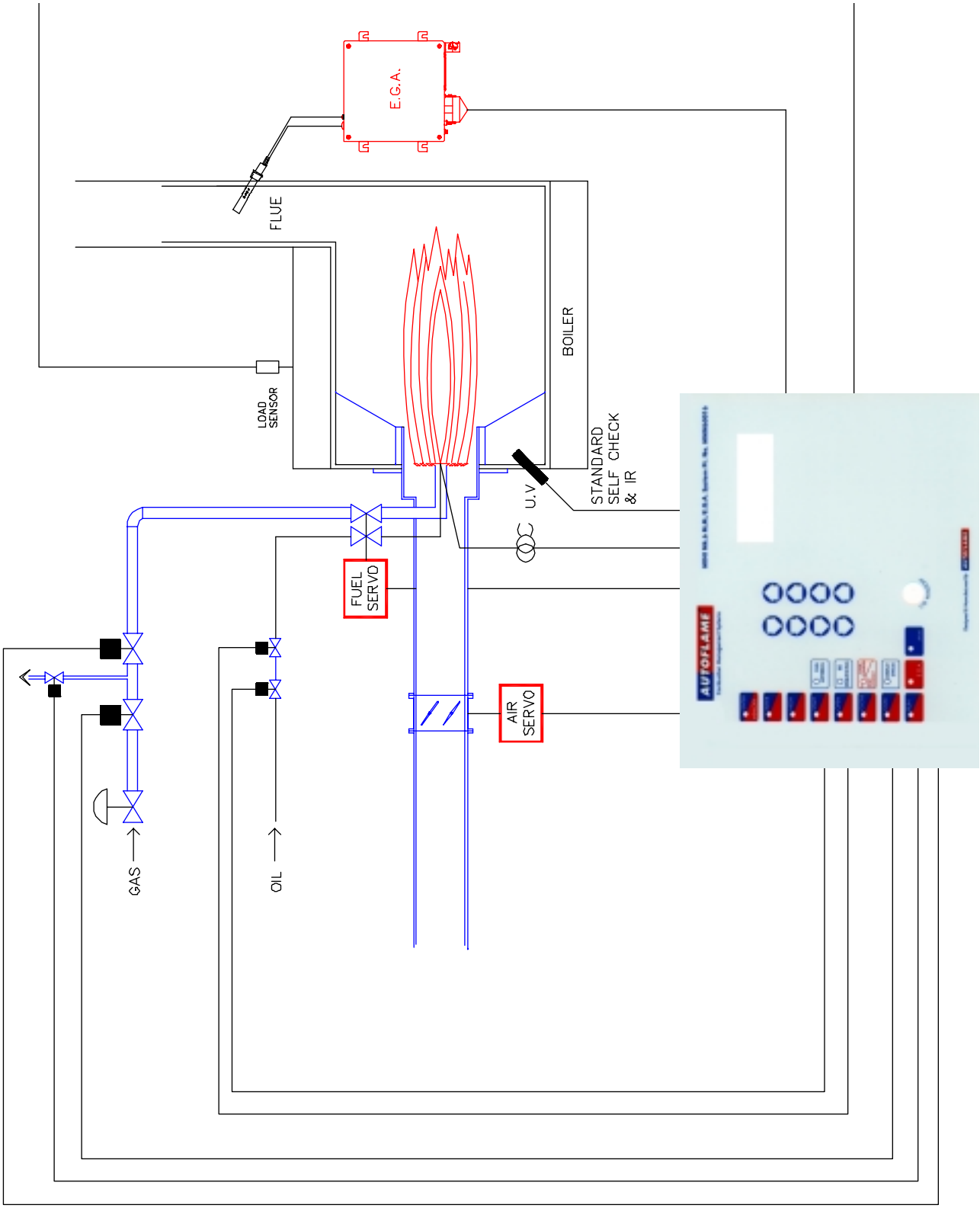

7.7.3 MINI MK5 MM/EGA

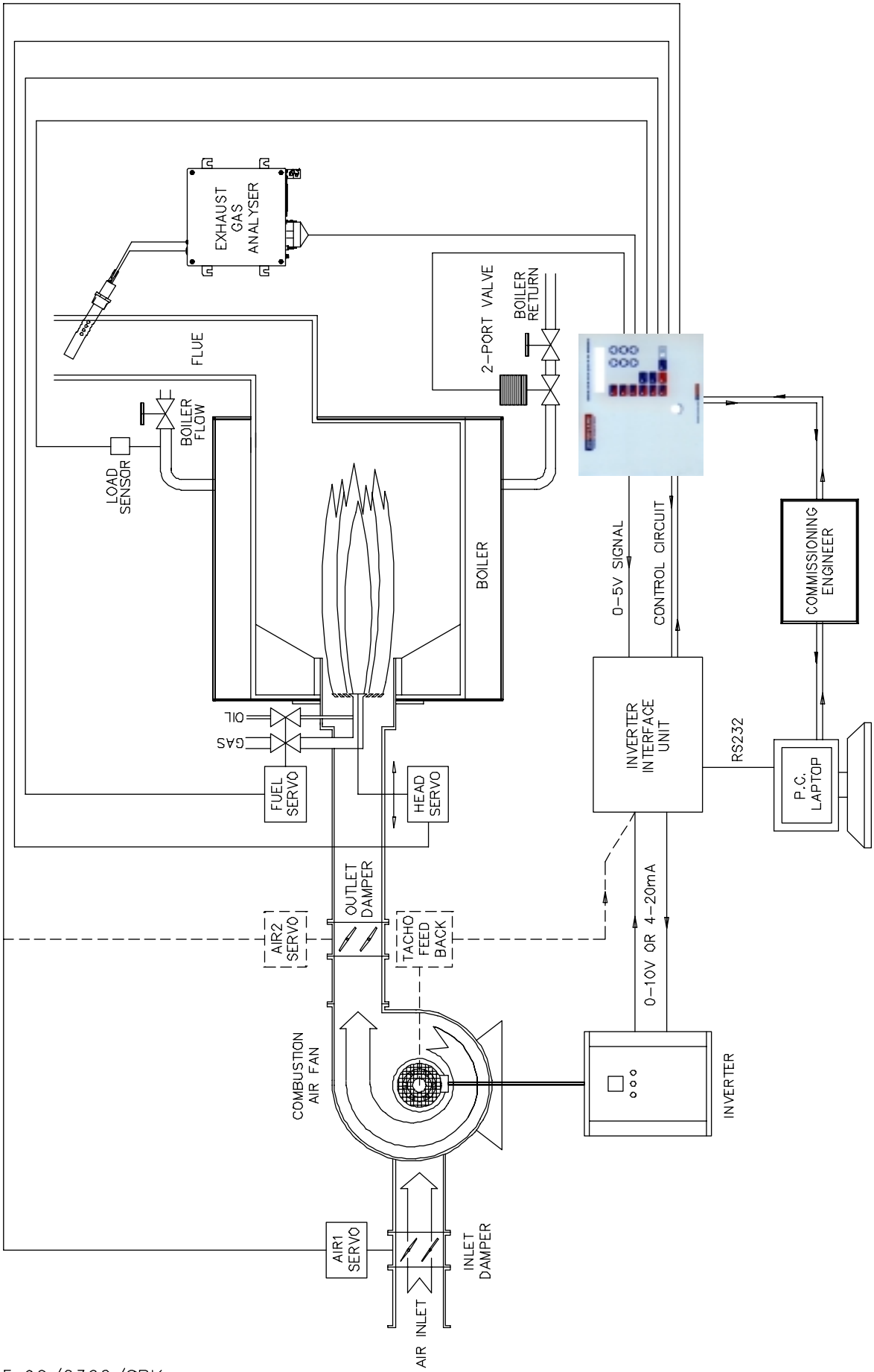

2: 5: 96/2362/SBK

Section 8: Ancillary & Peripheral Equipment.

8.0 VALVE SPECIFICATIONS

When using high viscosity low temperature fuel oils through smaller valves, turbulent flow characteristics can reduce volume throughput significantly.

All flow pressure graphs published for oil valves are using Light distillate oil @ 20°C and a viscosity of 5 centistokes.

Autoflame will carry out flow characteristic tests on specific valves against customer fuel/viscosity and temperature specifications. Price on application.

Standard oil valve build execution is mild steel valve body with cast bronze metering bobbin.

All valves can be supplied in nonstandard material at extra cost, price on application.

For very heavy fuel oil or contaminated fuels it is recommended that execution is stainless steel body and bobbin. The cost for all stainless steel construction is standard price x3.

Gas Valve's standard execution is Nickel Plate mild steel body with stainless steel metering disk. Gas valves can also be supplied for corrosive/contaminated fuels in all stainless steel construction at standard price x4.

For further information please contact your supplier.

8.0.1 OIL VALVE SELECTION

8.0.1.1 Spillback/Bypass Application

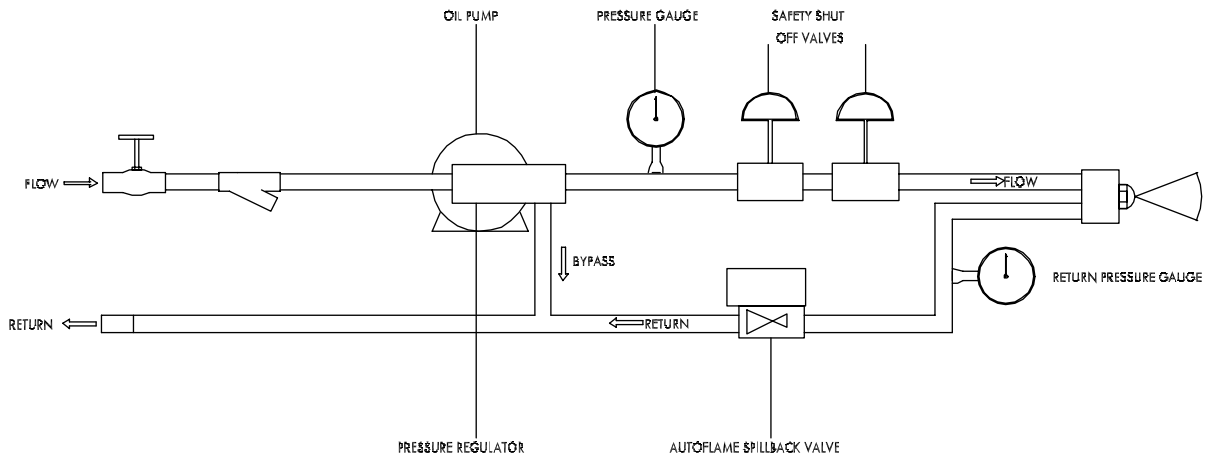

INFORMATION REQUIRED	ACTUAL DATA	TYPICAL DATA
OIL PUMP FLOW:		1.6X NOZZLE SIZE
OIL PUMP PRESSURE::		350 - 400 PSI
SOLENOID DETA P. (BOTH VALVES):		4 TO 20 PSI
NOZZLE MAXIMUM WORKING PRESSURE:		300 PSI
NOZZLE SIZE (IBS/HR)		1000 IB/HR
RETURN OIL PRESSURE AT LOW FIRE:		80 TO 120 PSI
OIL TYPE: #2,#4 OR #6		#2

WHEN SIZING THE OIL VALVE FOR BYPASS SYSTEMS. WE HAVE TO DETERMINE THE AMOUNT OF OIL BEING RETURNED TO THE PUMP/TANK AT LOW FIRE AND AT WHAT PRESSURE. THIS INFORMATION IS THEN USED AGAINST THE VALVE CHARTS IN THE AUTOFLAME MANUAL.
AT LOW FIRE IS WHEN THE VALVE IS MOST OPEN AND PRODUCING MAXIMUM FLOW.

BASED ON THE ABOVE EXAMPLE:

1000 IB/HR X 1.6	=	1600 IB/HR
LOW FIRE OIL REQUIREMENT	=	250 IB/HR (BASED AT 4 : 1 TURN DOWN. 1000 / 4)
1600 IB/HR - 250 IB/HR	=	1350 IB/HR
SPILLBACK OIL FLOW	=	1350 IB/HR @ 100 PSI

THEREFORE THE CORRECT VALVE WILL BE THE TYPE: 5

For assistance, fill in the actual data and return to Autoflame.

8.0.1.2 Metering/Simplex Application

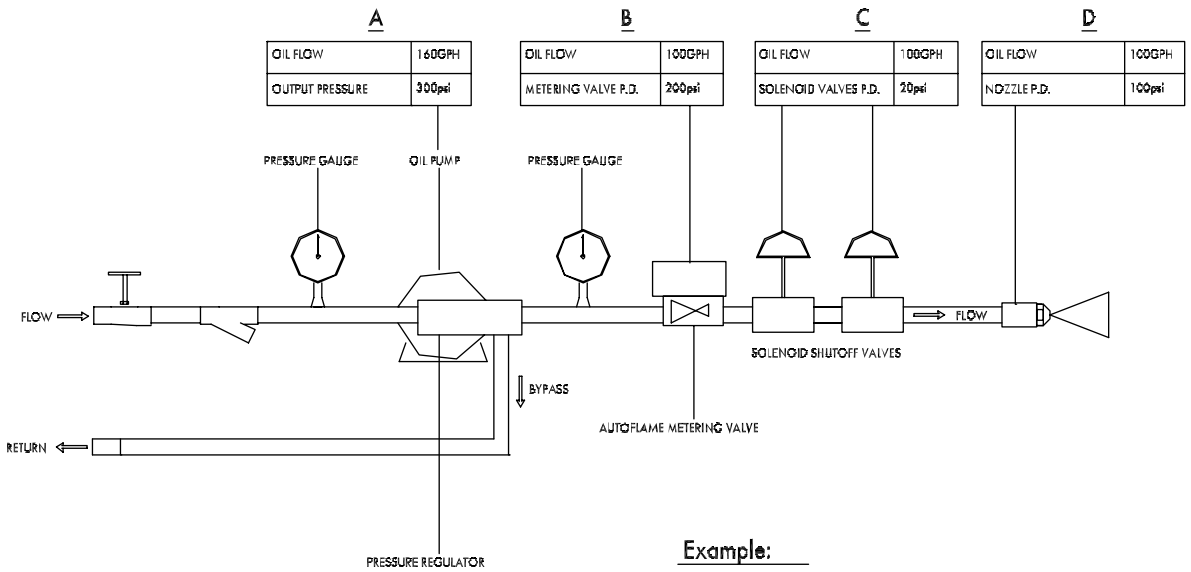

Example:

Known parameters are pump max flow and pressure output

Now determine the flow and pressure drop across the nozzle

The difference between VALUE A, C and D
is what is applied to the autoflame charts

From above example 300 - 100 - 20 = 180

From Autoflame charts in section 8.6.1 - 8.6.8
select valve that gives flow of 100GPH @ 180psi P.D.

VALVE SIZING METHOD

THE FOLLOWING INFORMATION MUST BE COMPLETED BEFORE THE OIL VALVE CAN BE CORRECTLY SIZED

FILL IN BOX "A" ABOVE
FILL IN BOX "C" ABOVE
FILL IN BOX "D" ABOVE

A - C - D = B

THE RESULTS OF BOX B NOW MUST BE APPLIED TO THE CHARTS IN THE AUTOFLAME MANUAL

For assistance, fill in the fields below and return to Autoflame:

A: _____

C: _____

D: _____

GAS CONTROL VALVES SCREWED TYPE
(SMALL POSITIONING MOTOR)

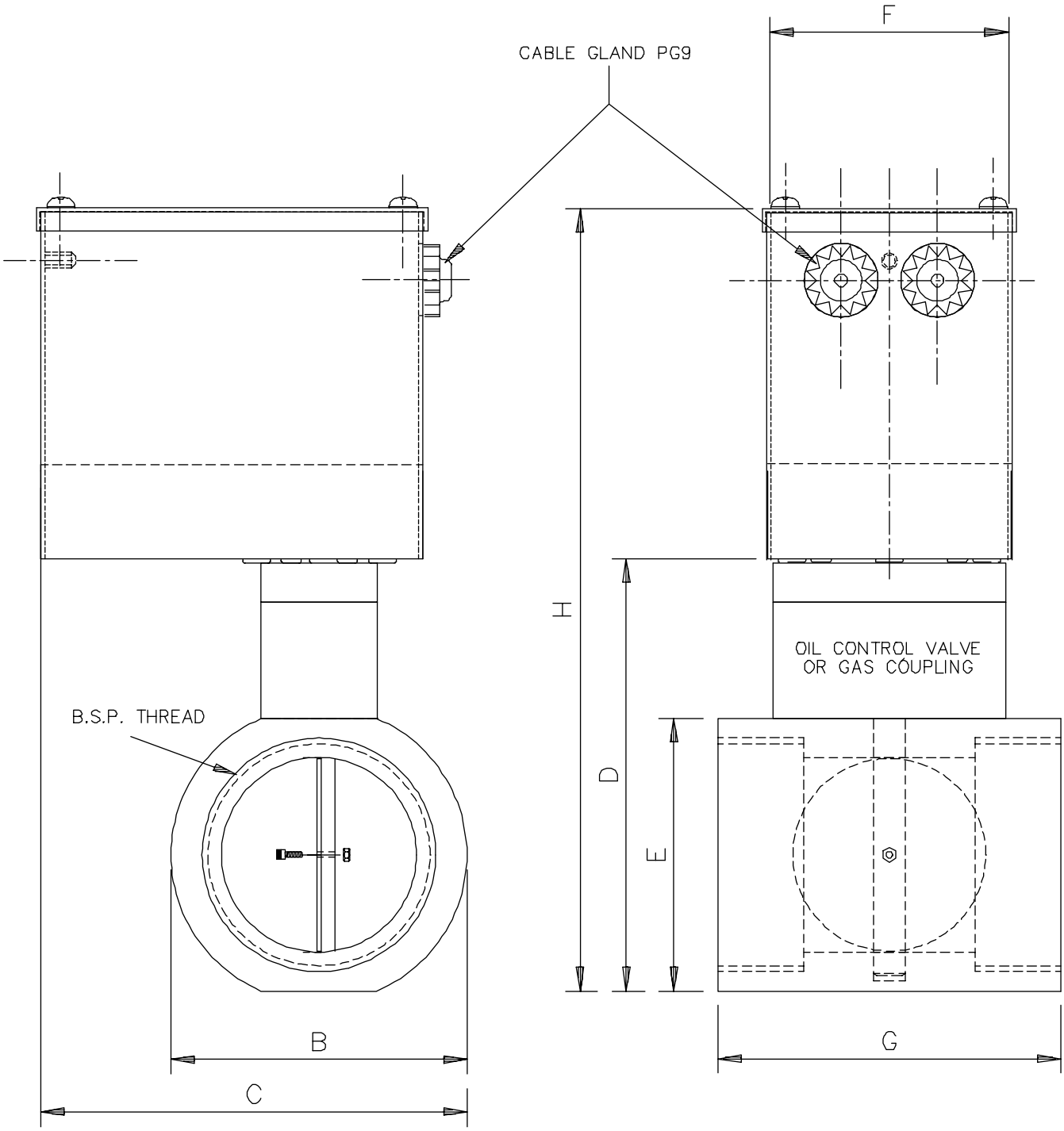

PART No.	A	B	C	D	E	F	G	H	VALVE SIZE
GV42521	100	54	97	85	45	65	88	180	25 (1")
GV44022	100	67	103.5	100	60	65	88	195	40 (1.5")
GV45023	100	76	108	110	70	65	88	205	50 (2")
GV46524	100	90	115	124	85	65	88	220	65 (2.5")
GV48025	100	105	123	140	100	65	88	235	80 (3")

ALL MEASUREMENTS IN MILLIMETRES UNLESS STATED OTHERWISE.

8:11:96/1529/GM

GAS CONTROL VALVES SCREWED TYPE
(SMALL POSITIONING MOTOR)

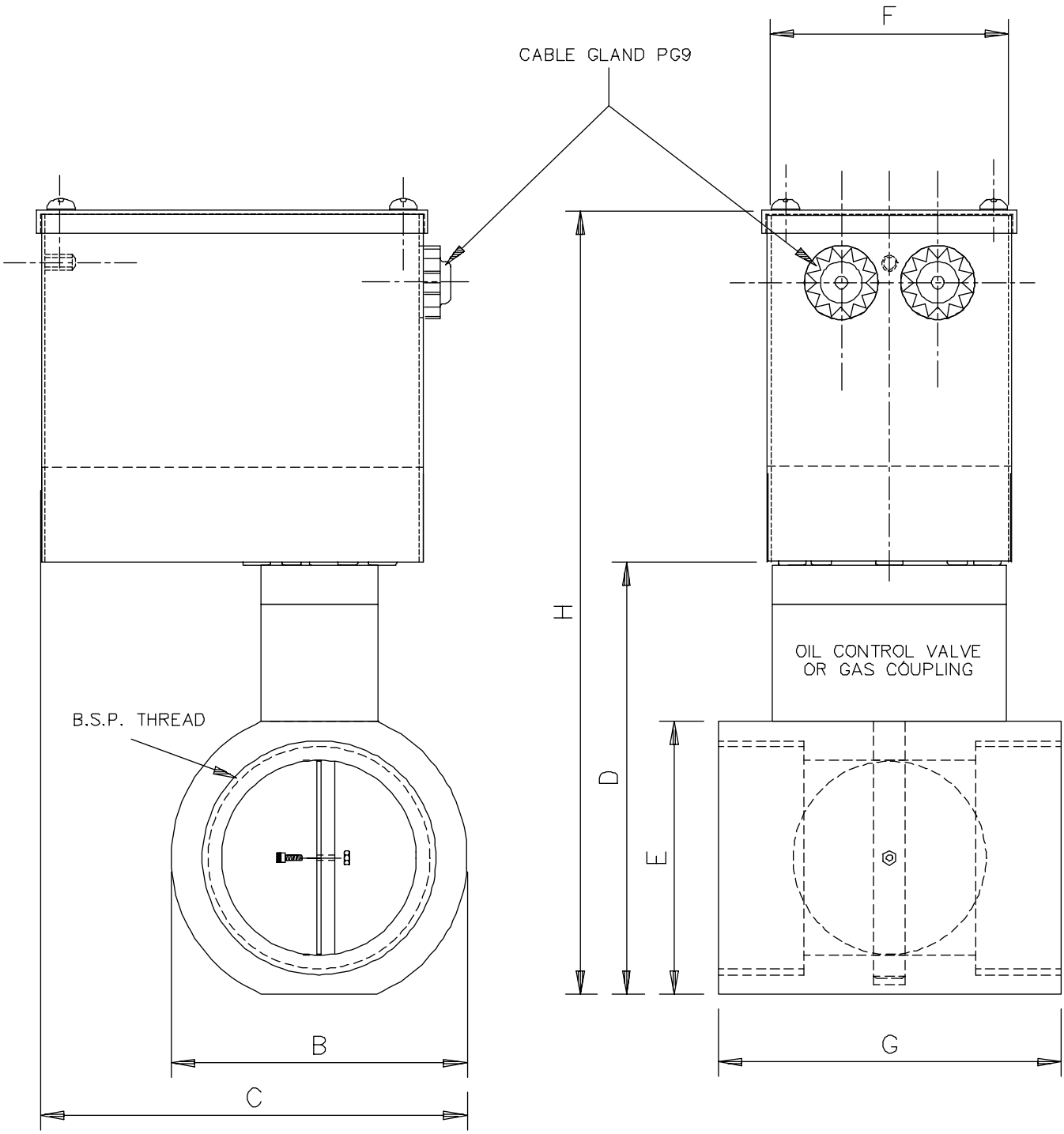

PART No.	A	B	C	D	E	F	G	H	VALVE SIZE
GV42521	4"	2.125"	3.80"	3.35"	1.75"	2.56"	3.47"	7.09"	1"
GV44022	4"	2.64"	4.08"	4"	2.375"	2.56"	3.47"	7.67"	1.5"
GV45023	4"	3"	4.25"	4.375"	2.75"	2.56"	3.47"	8.07"	2"
GV46524	4"	3.50"	4.50"	5"	3.35"	2.56"	3.47"	8.66"	2.5"
GV48025	4"	4.125"	4.85"	5.50"	4"	2.56"	3.47"	9.25"	3"

ALL MEASUREMENTS IN IMPERIAL UNLESS STATED OTHERWISE.

8:11:96/2658/GM

GAS CONTROL VALVE FLANGED TYPE (SMALL POSITIONING MOTOR)

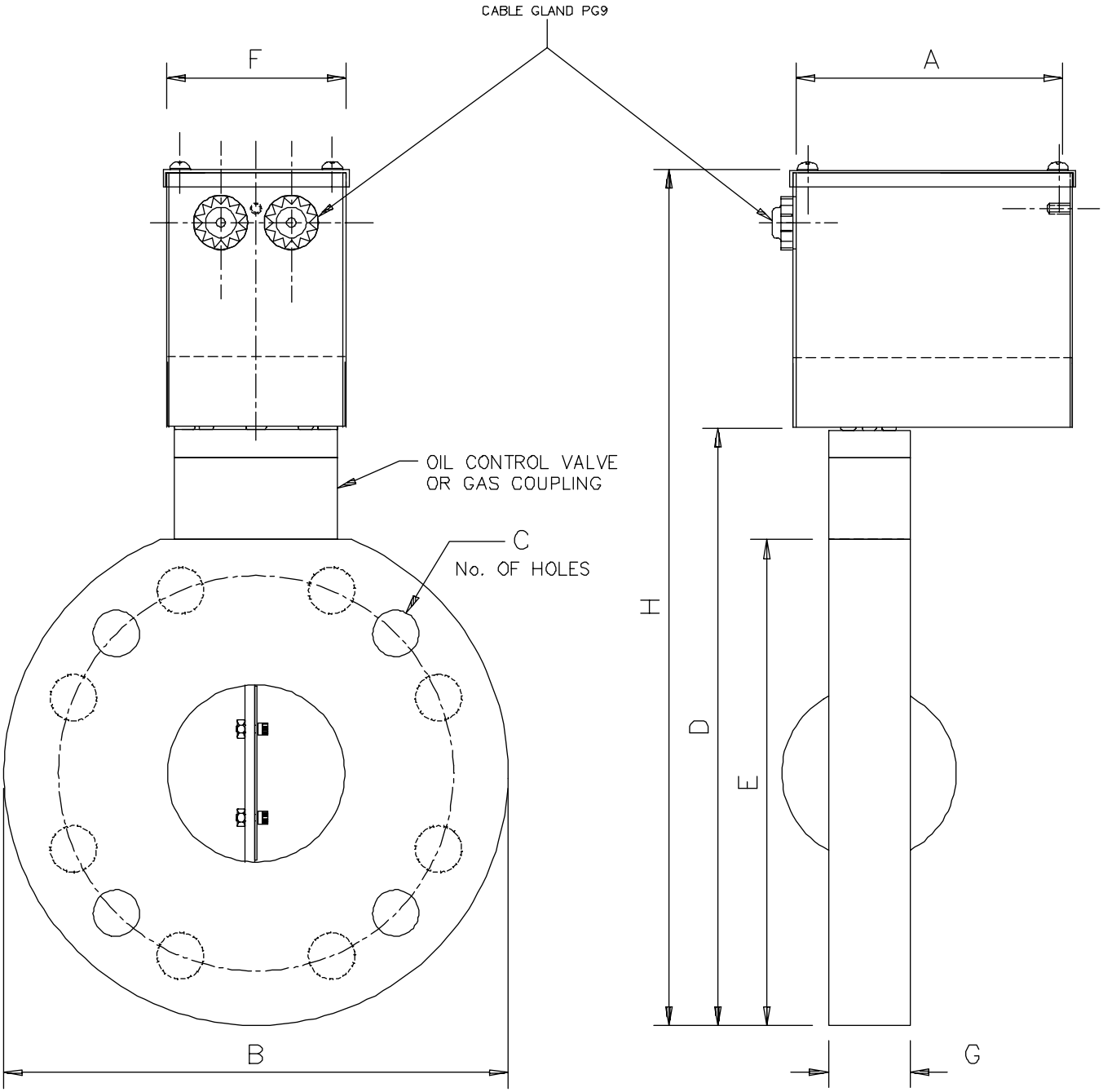

PART No.	A	B	C	D	E	F	G	H	BOLTING	VALVE SIZE
GVF45028/30	100	165	4	200	160	65	30	297	M16 X 110	50 (2")
GVF46526/30	100	185	4	218	178	65	30	315	M16 X 110	65 (2.5")
GVF48027/30	100	200	8	236	196	65	30	330	M16 X 110	80 (3")
GVF410026/30	100	220	8	254	214	65	30	350	M16 X 110	100 (4")
GVF12527/30	100	250	8	285	245	65	30	380	M16 X 110	125 (5")
GVF415028/30	100	285	8	321	281	65	30	415	M16 X 110	150 (6")

ALL MEASUREMENTS IN MILLIMETRES UNLESS STATED OTHERWISE.

MATING FLANGES, RUBBER GASKETS & BOLTS ARE NOT SUPPLIED UNLESS SPECIFIED ON ORDER.

11:11:96/1782/GM

GAS CONTROL VALVE FLANGED TYPE
(SMALL POSITIONING MOTOR)

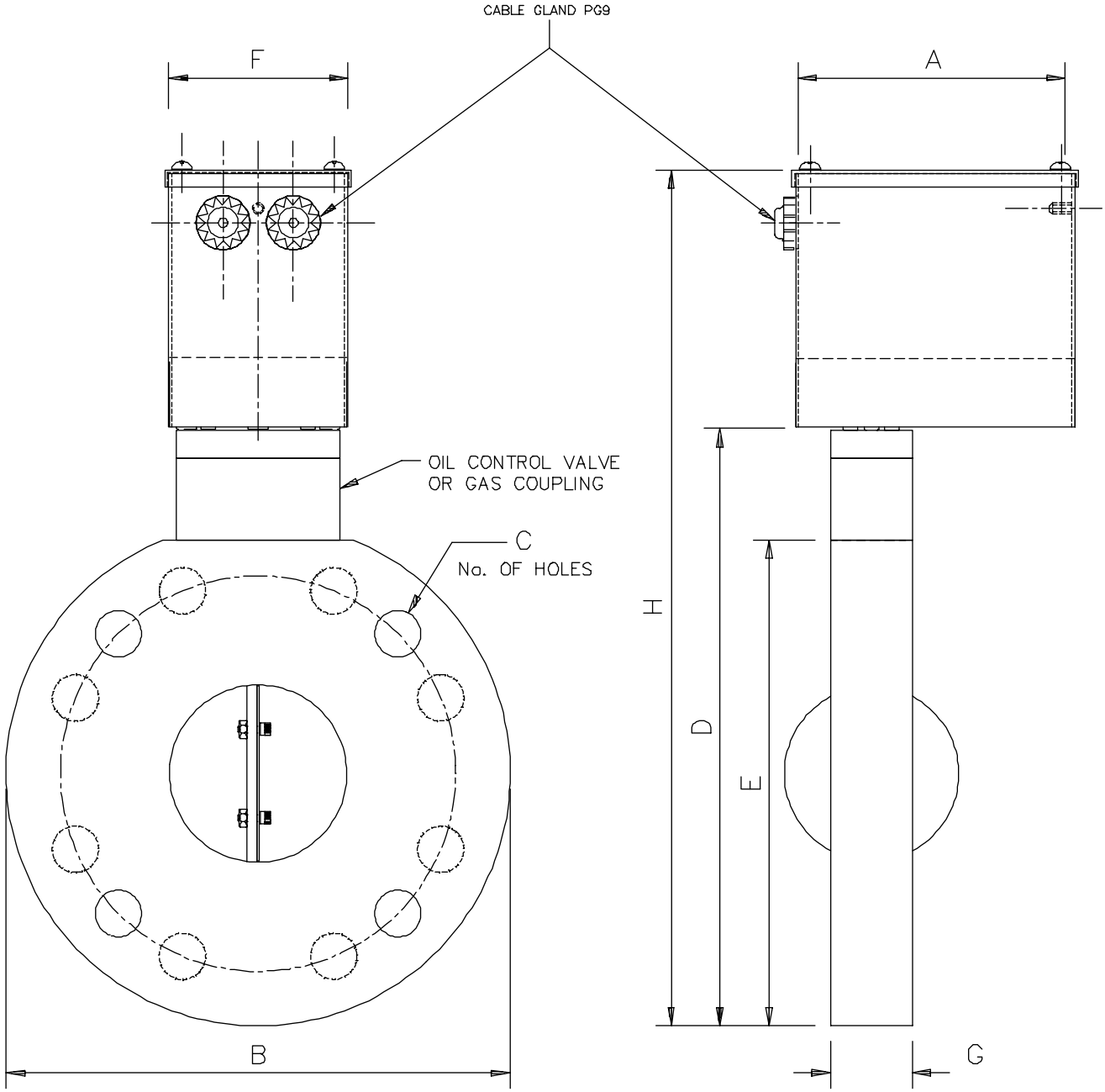

PART No.	A	B	C	D	E	F	G	H	BOLTING	VALVE SIZE
GVF45028/30	3.9"	6"	4	8"	6.25"	2.5"	1.125"	11.7"	1/2" X 4"	2"
GVF46526/30	3.9"	7"	4	8.6"	7"	2.5"	1.125"	12.40"	5/8" x 4"	2.5"
GVF48027/30	3.9"	7.5"	4	9.375"	7.75"	2.5"	1.125"	13.00"	5/8" x 4"	3"
GVF410026/30	3.9"	9"	8	10"	8.5"	2.5"	1.125"	8.75"	5/8" x 4"	4"
GVF12527/30	3.9"	10"	8	11"	9.75"	2.5"	1.125"	9.5"	3/4" x 4"	5"
GVF413028/30	3.9"	11"	8	12.5"	11"	2.5"	1.125"	10.25"	3/4" x 4"	6"

ALL MEASUREMENTS IN IMPERIAL UNLESS STATED OTHERWISE.

MATING FLANGES, RUBBER GASKETS & BOLTS ARE NOT SUPPLIED UNLESS SPECIFIED ON ORDER.

10: 2: 95/2660/GM

GAS CONTROL VALVE FLANGED TYPE
(LARGE POSITIONING MOTOR)

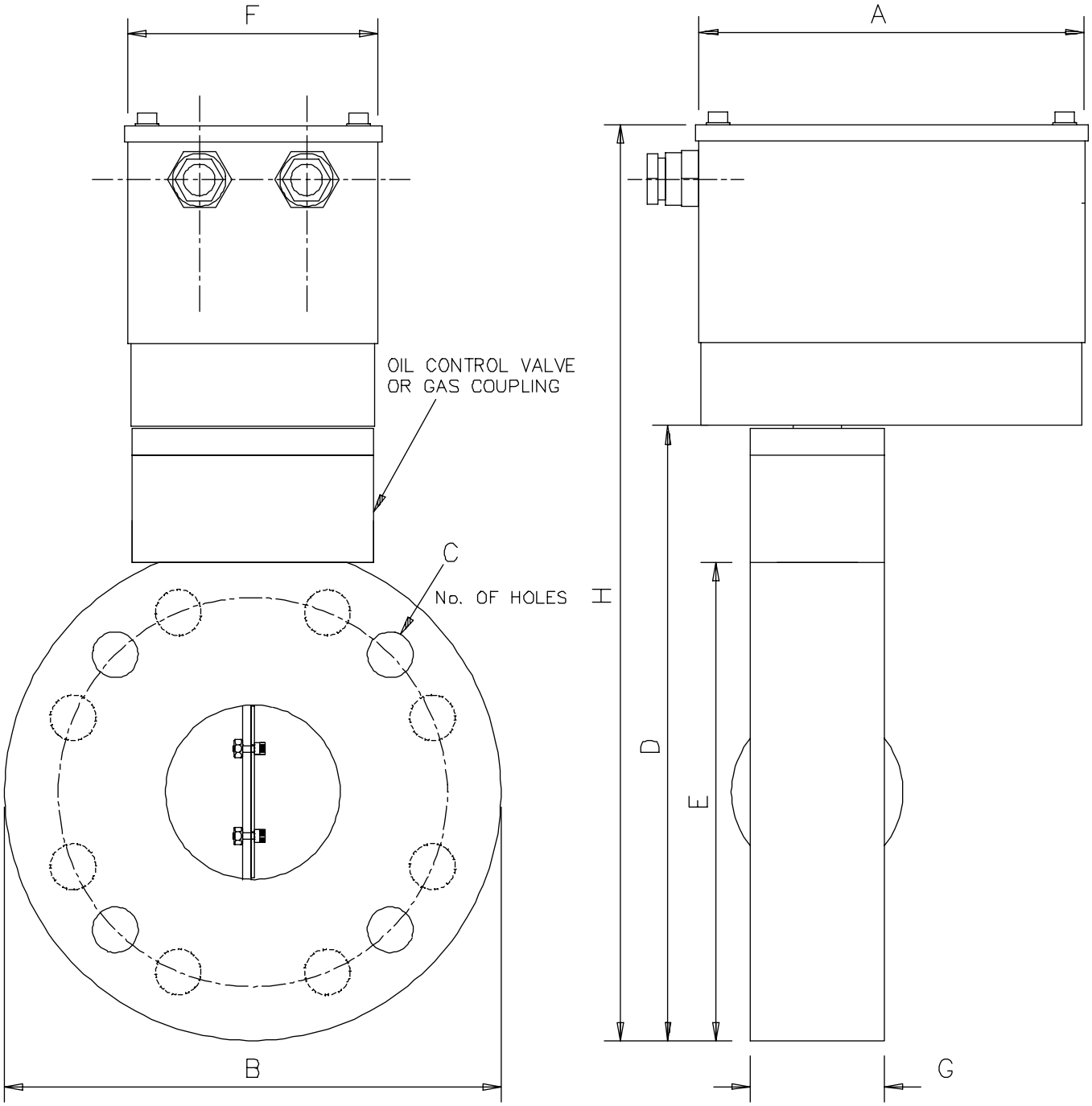

PART No.	A	B	C	D	E	F	G	H	BOLTING	VALVE SIZE
GVF45028/50	142	165	4	200	160	93	50	315	M16 X 130	50 (2")
GVF46526/50	142	185	4	218	178	93	50	343	M16 X 130	65 (2.5")
GVF48027/50	142	200	8	236	196	93	50	362	M16 X 130	80 (3")
GVF410026/50	142	220	8	254	214	93	50	380	M16 X 130	100 (4")
GVF12527/50	142	250	8	285	245	93	50	410	M16 X 130	125 (5")
GVF415028/50	142	285	8	321	281	93	50	446	M16 X 130	150 (6")

ALL MEASUREMENTS IN MILLIMETRES UNLESS STATED OTHERWISE.

MATING FLANGES, RUBBER GASKETS & BOLTS ARE NOT SUPPLIED UNLESS SPECIFIED ON ORDER.

3:6:92/1783/SBK

GAS CONTROL VALVE FLANGED TYPE
(LARGE POSITIONING MOTOR)

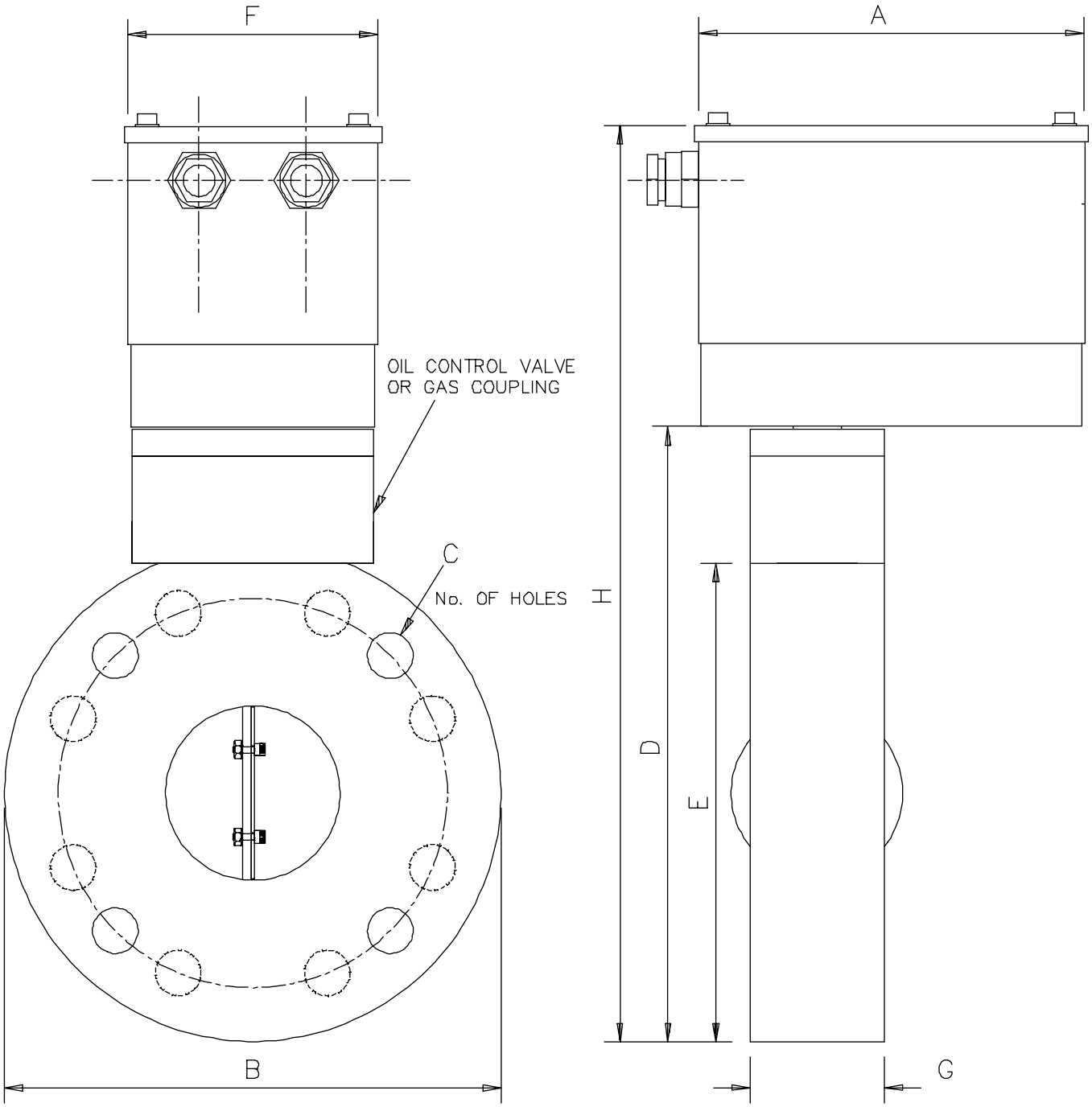

PART No.	A	B	C	D	E	F	G	H	BOLTING	VALVE SIZE
GVF45028/50	4.60"	6"	4	8"	6.25"	3.66"	2"	12.40"	1/2" X 5"	2"
GVF46526/50	4.60"	7"	4	8.6"	7"	3.66"	2"	13.50"	5/8" x 5"	2.5"
GVF48027/50	4.60"	7.5"	4	9.375"	7.75"	3.66"	2"	14.25"	5/8" x 5"	3"
GVF410026/50	4.60"	9"	8	10"	8.5"	3.66"	2"	14.92"	5/8" x 5"	4"
GVF12527/50	4.60"	10"	8	11"	9.75"	3.66"	2"	16.14"	3/4" x 5"	5"
GVF415028/50	4.60"	11"	8	12.5"	11"	3.66"	2"	17.56"	3/4" x 5"	6"

ALL MEASUREMENTS IN IMPERIAL UNLESS STATED OTHERWISE.

MATING FLANGES, RUBBER GASKETS & BOLTS ARE NOT SUPPLIED UNLESS SPECIFIED ON ORDER.

9:2:95/2659/GM

ASSEMBLY OF MM/EGA SYSTEM SCREWED GAS
BUTTERFLY VALVE & OIL CONTROL VALVE
WITH SMALL POSITIONING MOTOR

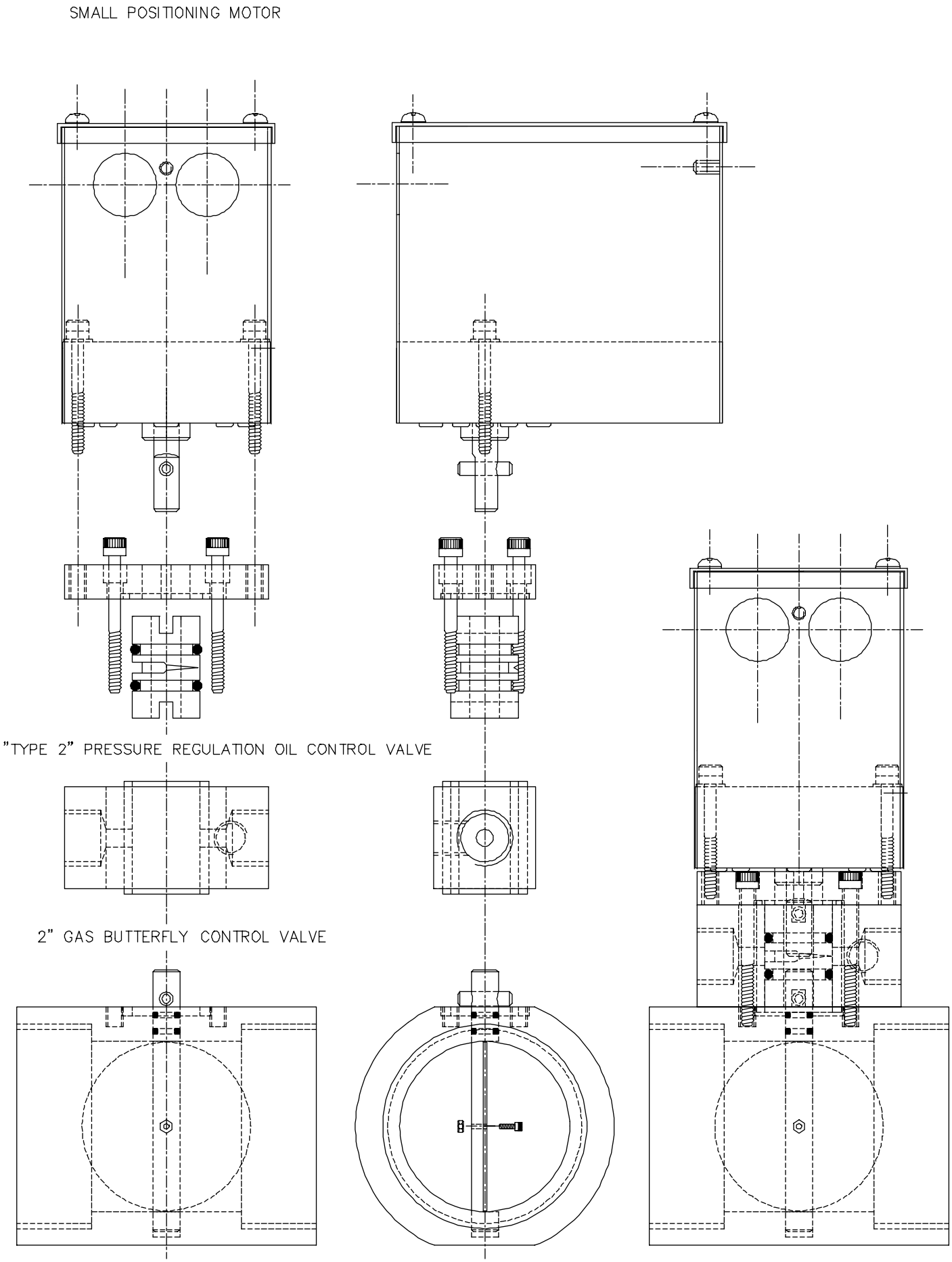

11: 3: 96/1530/SBK

ASSEMBLY OF MM/EGA SYSTEM FLANGED GAS
BUTTERFLY VALVE & OIL CONTROL VALVE
WITH SMALL POSITIONING MOTOR

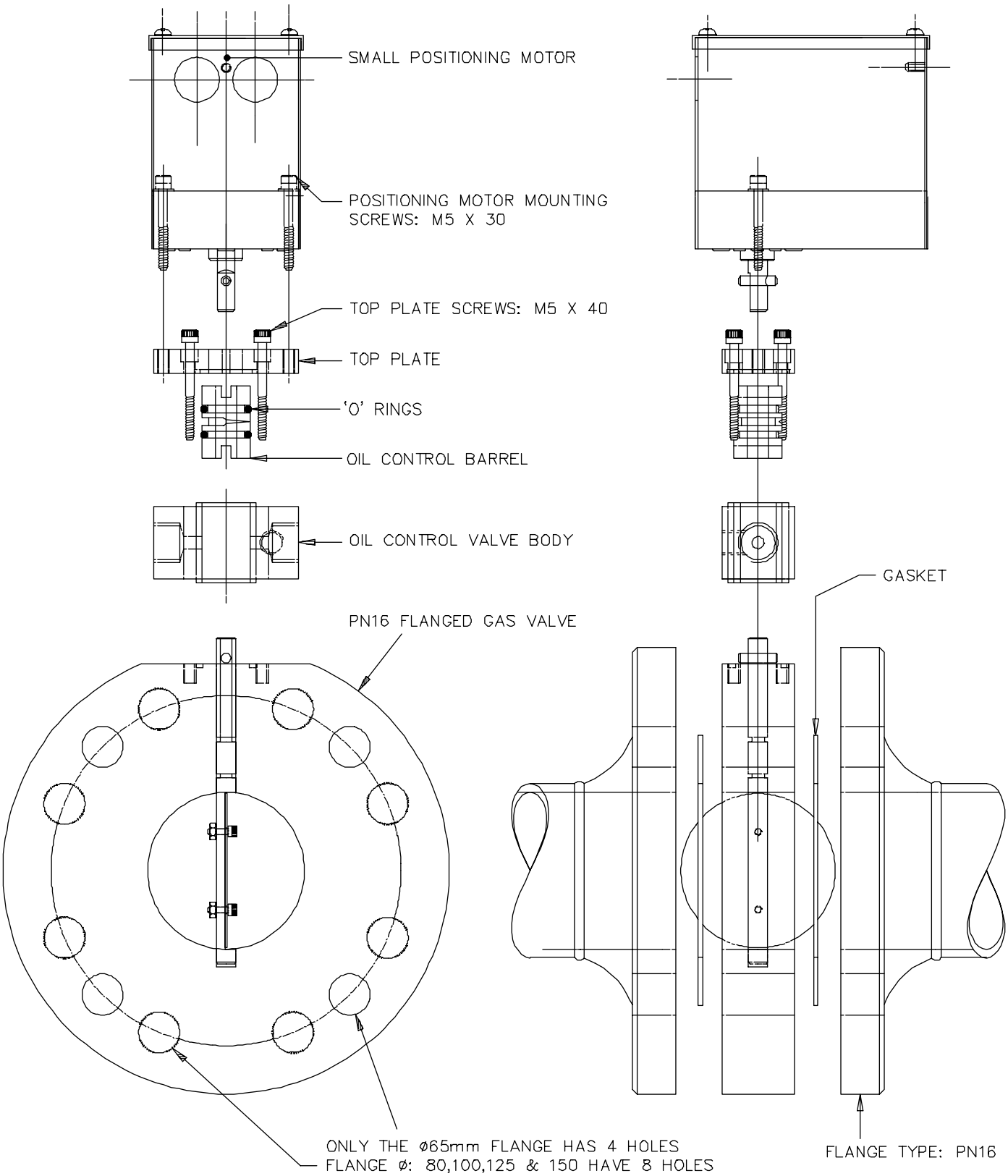

11: 3: 96/1729/SBK

ASSEMBLY OF MM/EGA SYSTEM FLANGED GAS BUTTERFLY VALVE & OIL CONTROL VALVE WITH SMALL POSITIONING MOTOR

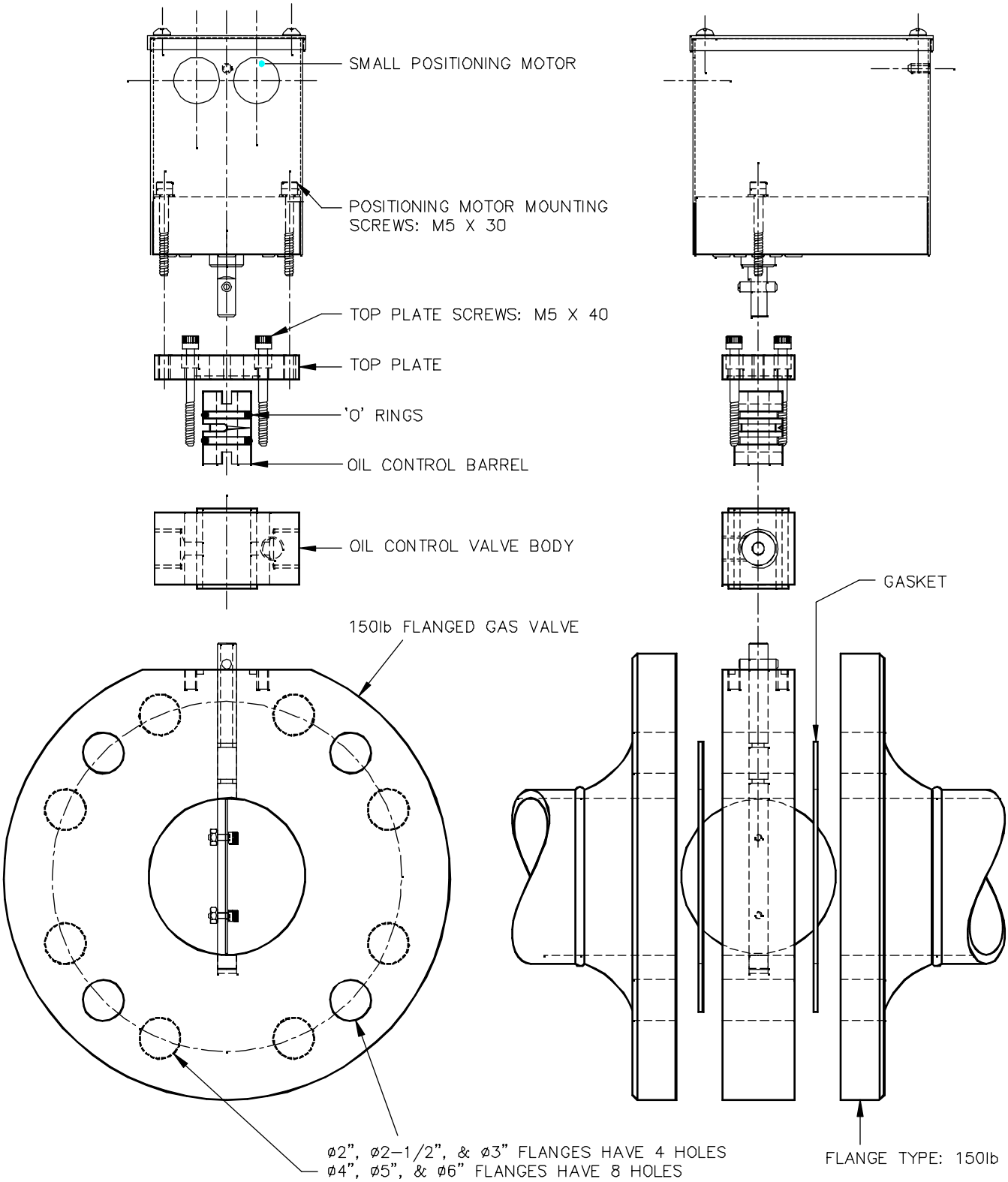

1:3:96/2657/GM

AUTOFLAME BUTTERFLY VALVE
FLOW DATA (VALVE SIZING)

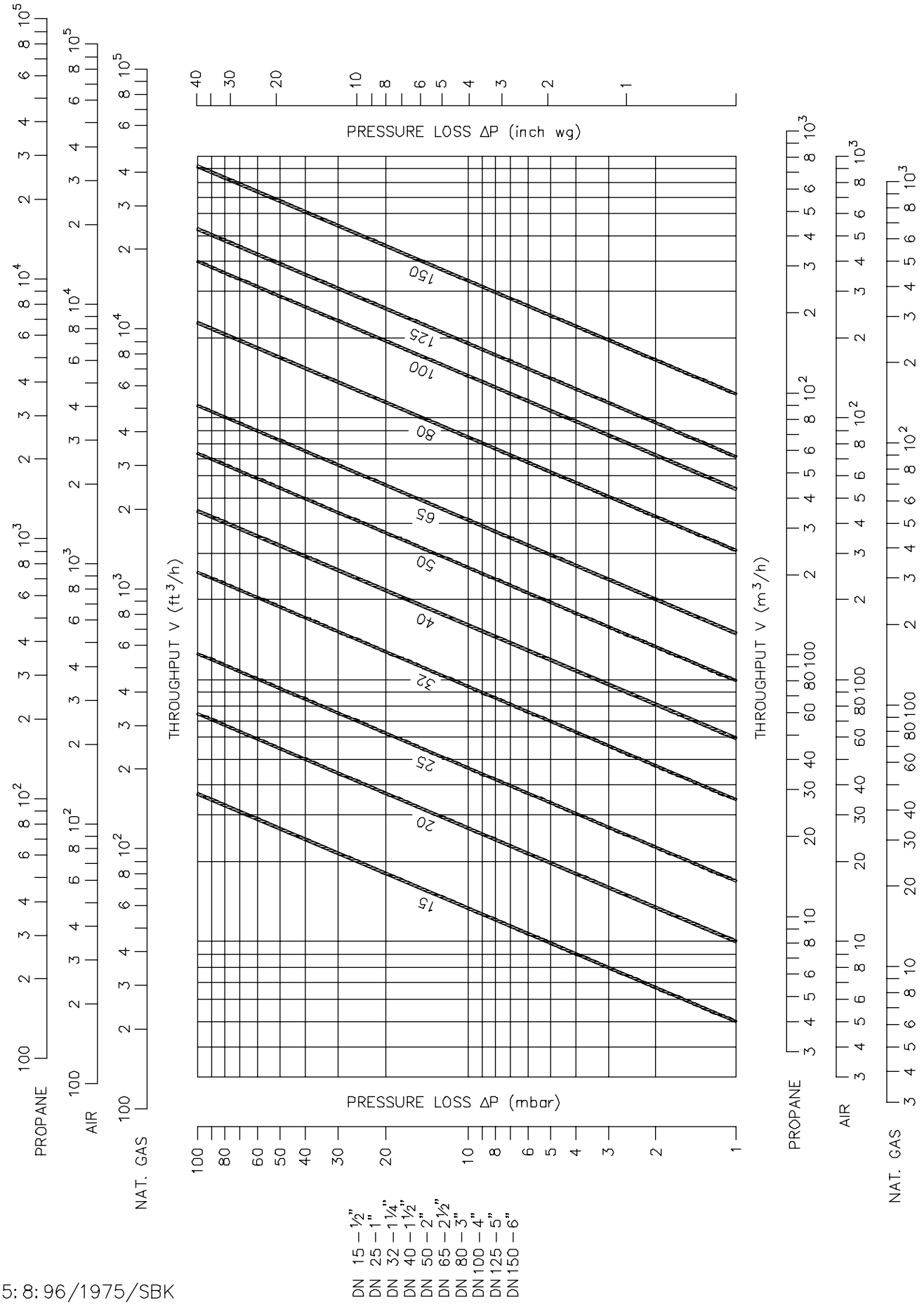

5: 8: 96/1975/SBK

TYPE: 1,2,5,6,8,9 OIL CONTROL
VALVE CONNECTION DIAGRAM

THESE VALVES CAN BE SUPPLIED AS BOTH METERING OR SPILLBACK.
(PLEASE NOTE PART NUMBER.)

WHEN USING CONTROL VALVE FOR A DUAL FUEL APPLICATION ie. GAS + OIL
THE BOTTOM PLATE OF THE OIL VALVE MUST BE REMOVED FOR ASSEMBLY
WITH THE GAS CONTROL VALVE.
HEIGHT: 50mm (2") (WITH BOTTOM PLATE)
WIDTH: 30mm (1.125")
LENGTH: 60mm (2.375")

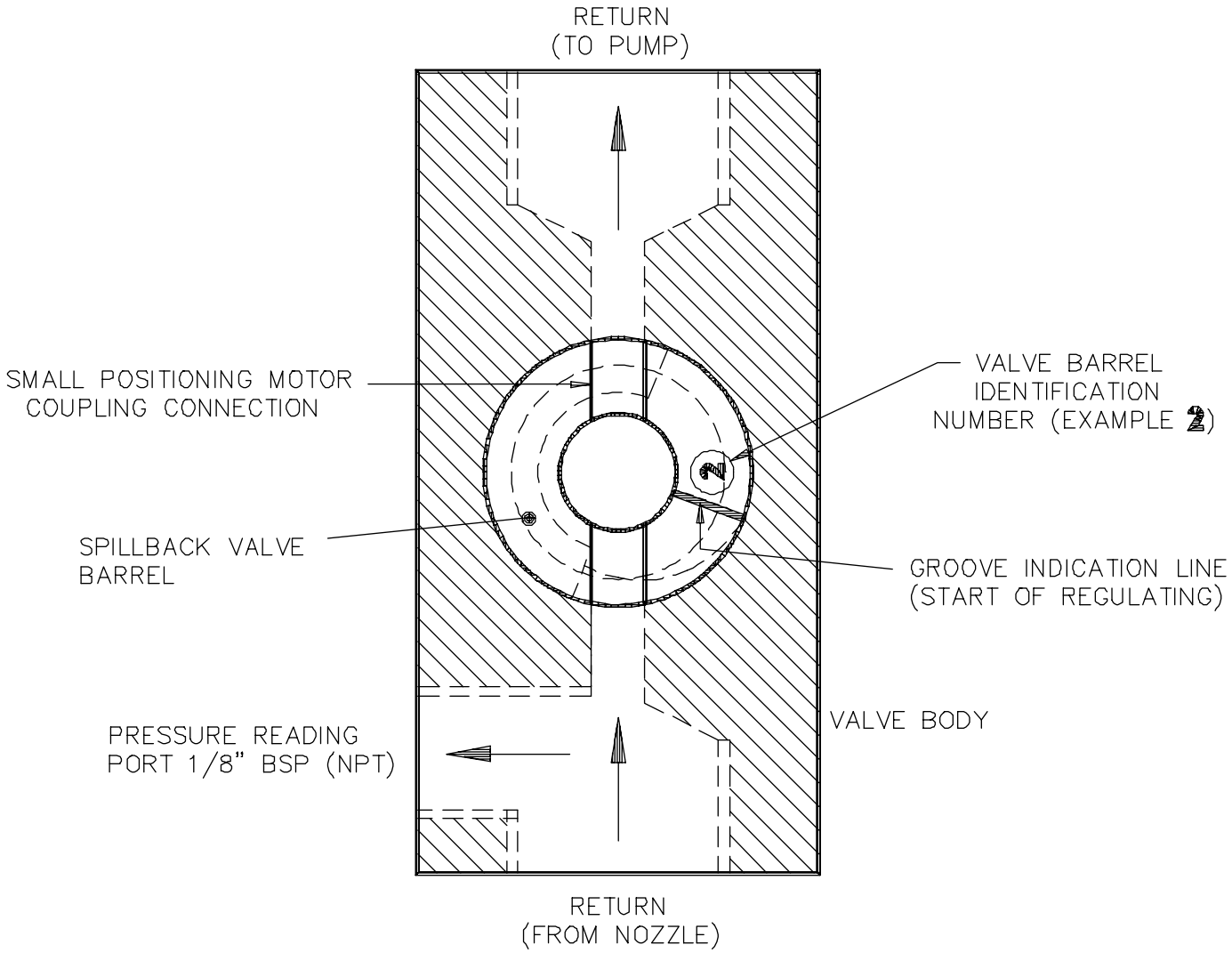

VALVE TYPE	PIPE THREAD	PART No. SPILLBACK	PART No. METERING
1	1/4" BSP.	OVS31015	OVM31015
2	3/8" BSP.	OVS32016	OVM32016
5	3/8" BSP.	OVS35019	OVM35019
6	3/8" BSP.	OVS36020	OVM36020
8	3/8" BSP.	OVS38022	OVM38022
9	3/8" BSP.	OVS39023	OVM39023

9:1:97/2656/GM

TYPE: SMALL METERING OIL CONTROL
VALVE CONNECTION DIAGRAM

THIS TYPE OF VALVE IS SPECIFIC TO METERING TYPE OPERATION
THE VALVE IS IDENTIFIABLE BY THE PART NUMBER OVM
WHERE AS THE SPILLBACK (BY-PASS) TYPE VALVE IS IDENTIFIED BY OVS

WHEN USING CONTROL VALVE FOR A DUAL FUEL APPLICATION ie. GAS + OIL
THE BOTTOM PLATE OF THE OIL VALVE MUST BE REMOVED FOR ASSEMBLY
WITH THE GAS CONTROL VALVE.
HEIGHT: 50mm (2") (WITH BOTTOM PLATE)
WIDTH: 30mm (1.125")
LENGTH: 60mm (2.375")

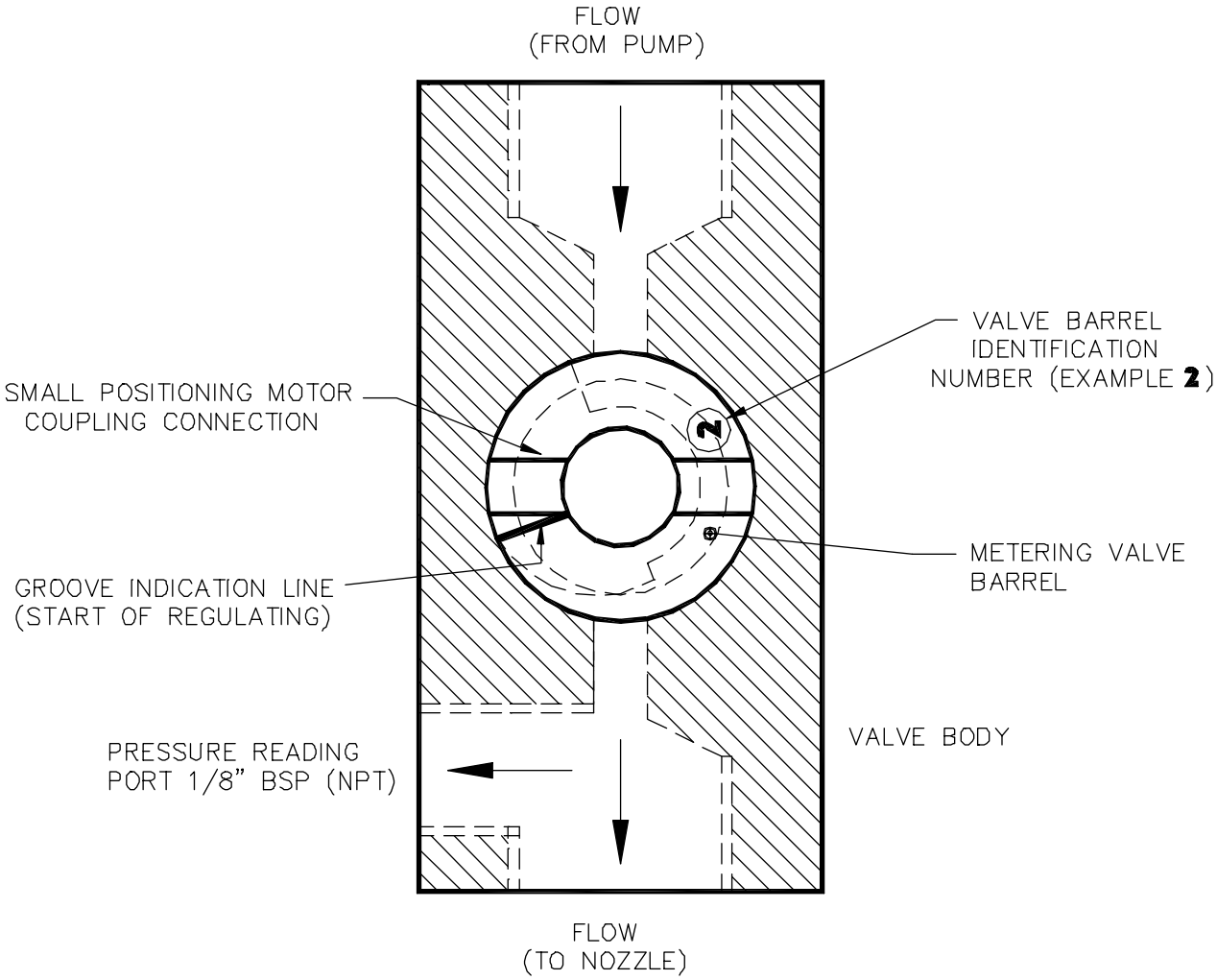

VALVE TYPE	PIPE THREAD	METERING PART NUMBER
1	1/4" BSP.	OVM31015
2	3/8" BSP.	OVM32016
5	3/8" BSP.	OVM35019
6	3/8" BSP.	OVM36020
8	3/8" BSP.	OVM38022
9	3/8" BSP.	OVM39023

6:7:99/3175/TF

TYPE: 4 SPILLBACK OIL CONTROL VALVE CONNECTION DIAGRAM PART No. OVS34L18

THIS CAN ALSO BE USED AS A METERING VALVE, PART No. OVM34L18

WHEN USING CONTROL VALVE FOR A DUAL FUEL APPLICATION ie. GAS + OIL THE BOTTOM PLATE OF THE OIL VALVE MUST BE REMOVED FOR ASSEMBLY WITH THE GAS CONTROL VALVE.
HEIGHT: 70mm (3") (WITH BOTTOM PLATE)
WIDTH: 50mm (2")
LENGTH: 110mm (4.375")

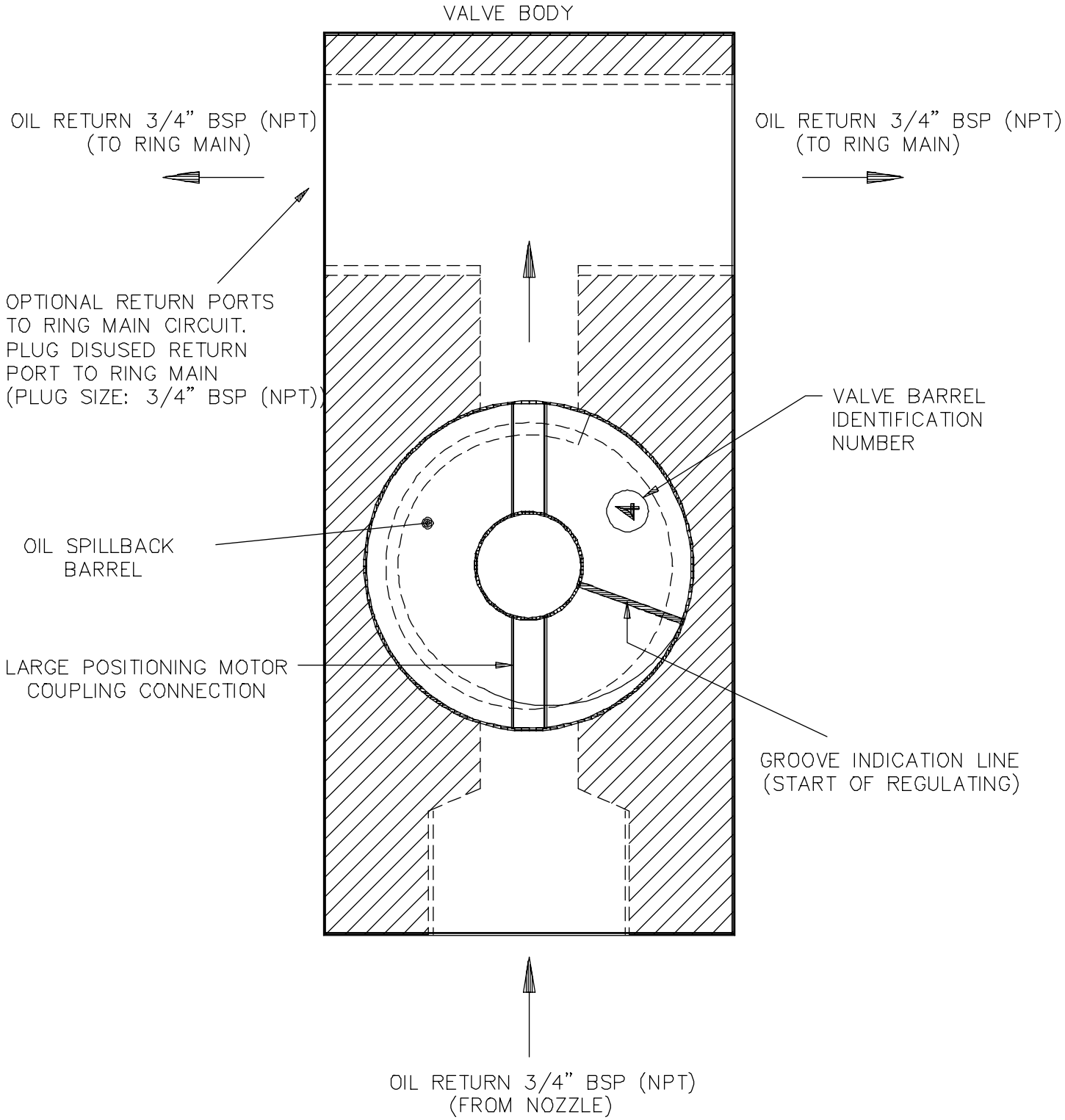

19:11:96/2655/GM

TYPE: 3 METERING OIL CONTROL
VALVE CONNECTION DIAGRAM
PART No. OVM33L17

THSI CAN ALSO BE USED AS A SPILLBACK VALVE PART No. OVS33L17

WHEN USING CONTROL VALVE FOR A DUAL FUEL APPLICATION ie. GAS + OIL
THE BOTTOM PLATE OF THE OIL VALVE MUST BE REMOVED FOR ASSEMBLY
WITH THE GAS CONTROL VALVE.
HEIGHT: 70mm (3") (WITH BOTTOM PLATE)
WIDTH: 50mm (2")
LENGTH: 110mm (4.375")

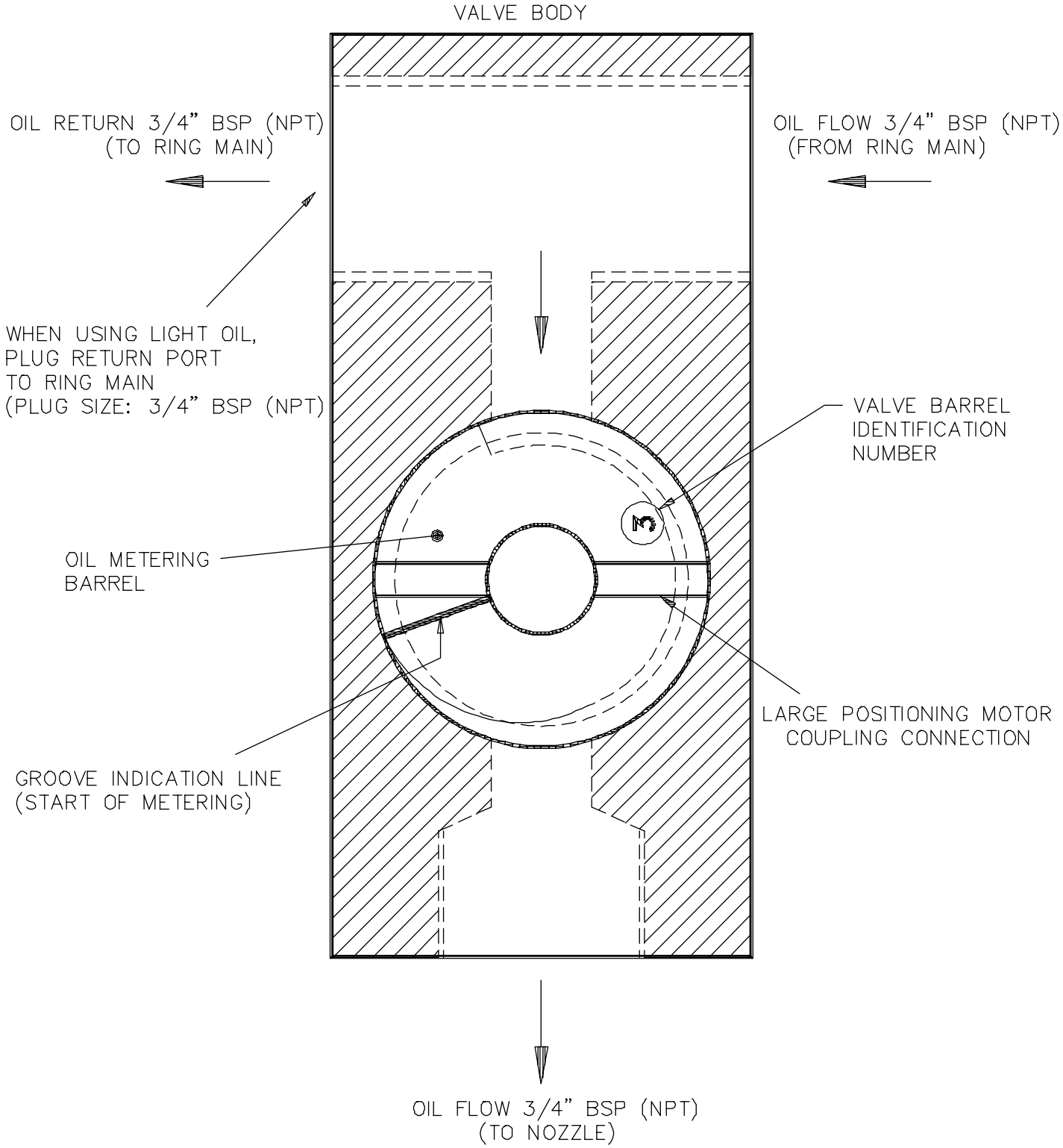

19:11:96/2654/GM

FLOW CHARACTERISTICS
M.M. VALVE TYPE 1 (SPILLBACK)

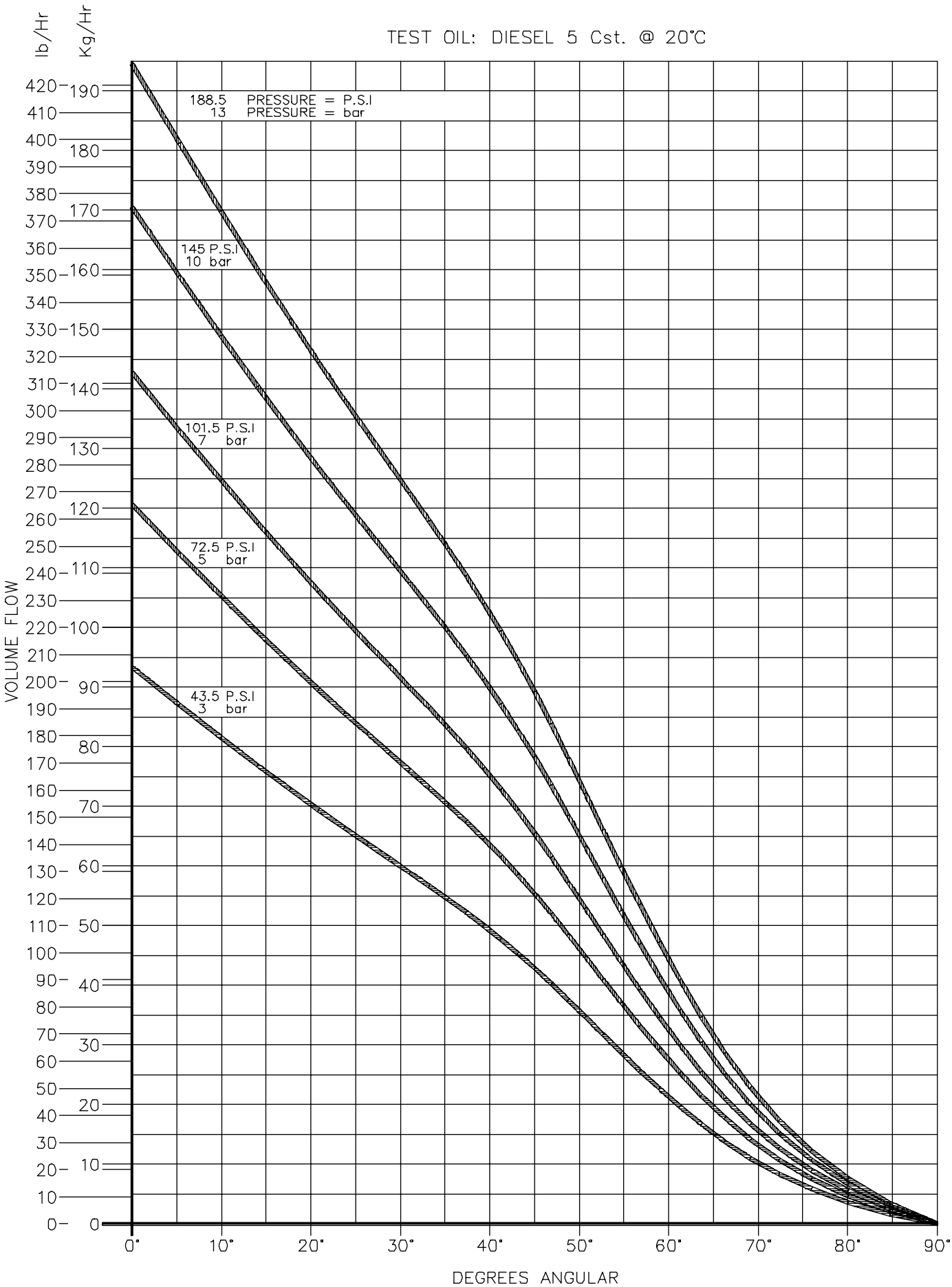

23: 3: 95/2686/SBK

FLOW CHARACTERISTICS
M.M. VALVE TYPE 2 (SPILLBACK)

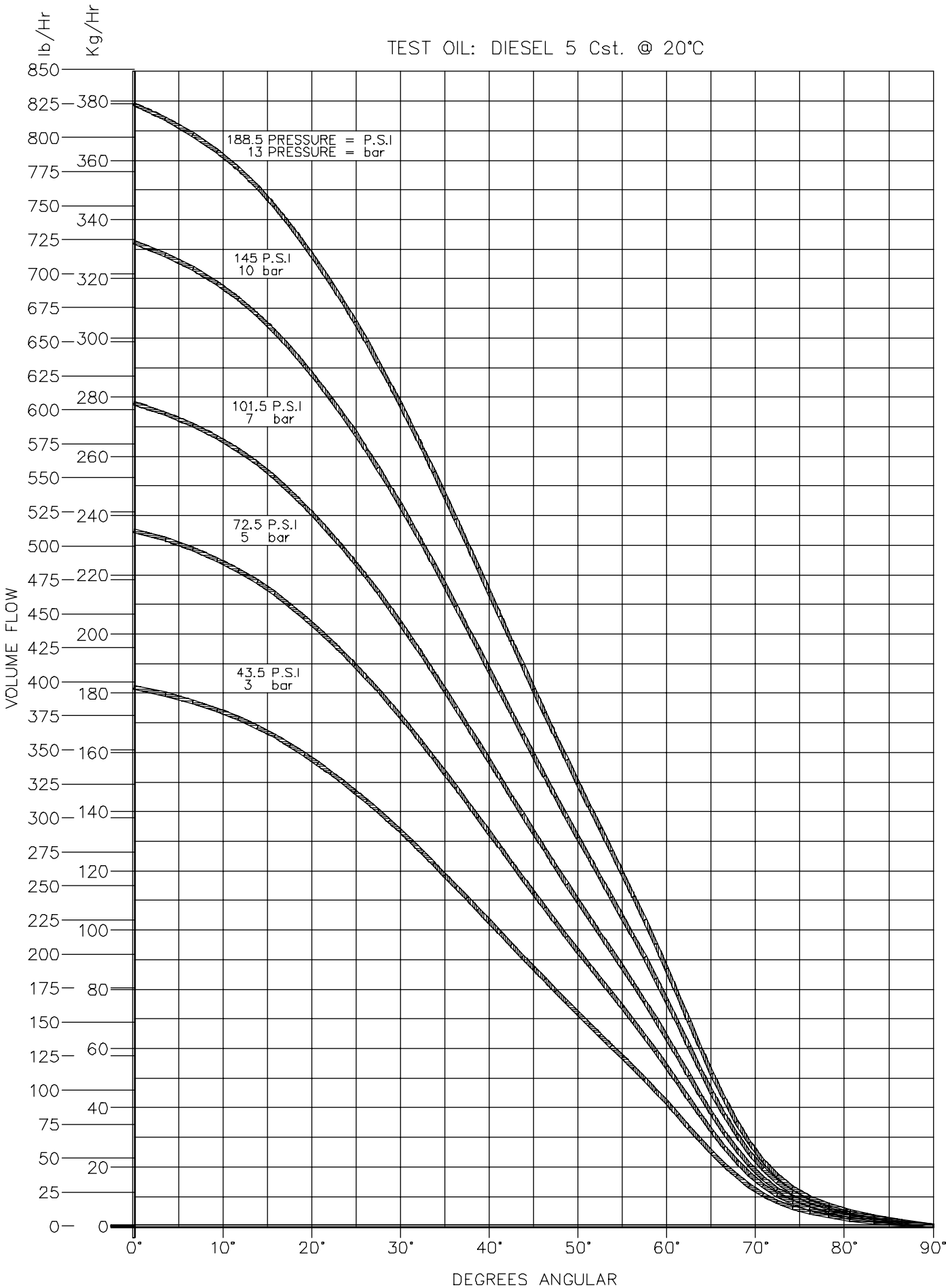

30: 3: 95/2701/GM

FLOW CHARACTERISTICS
M.M. VALVE TYPE 4 (SPILLBACK)

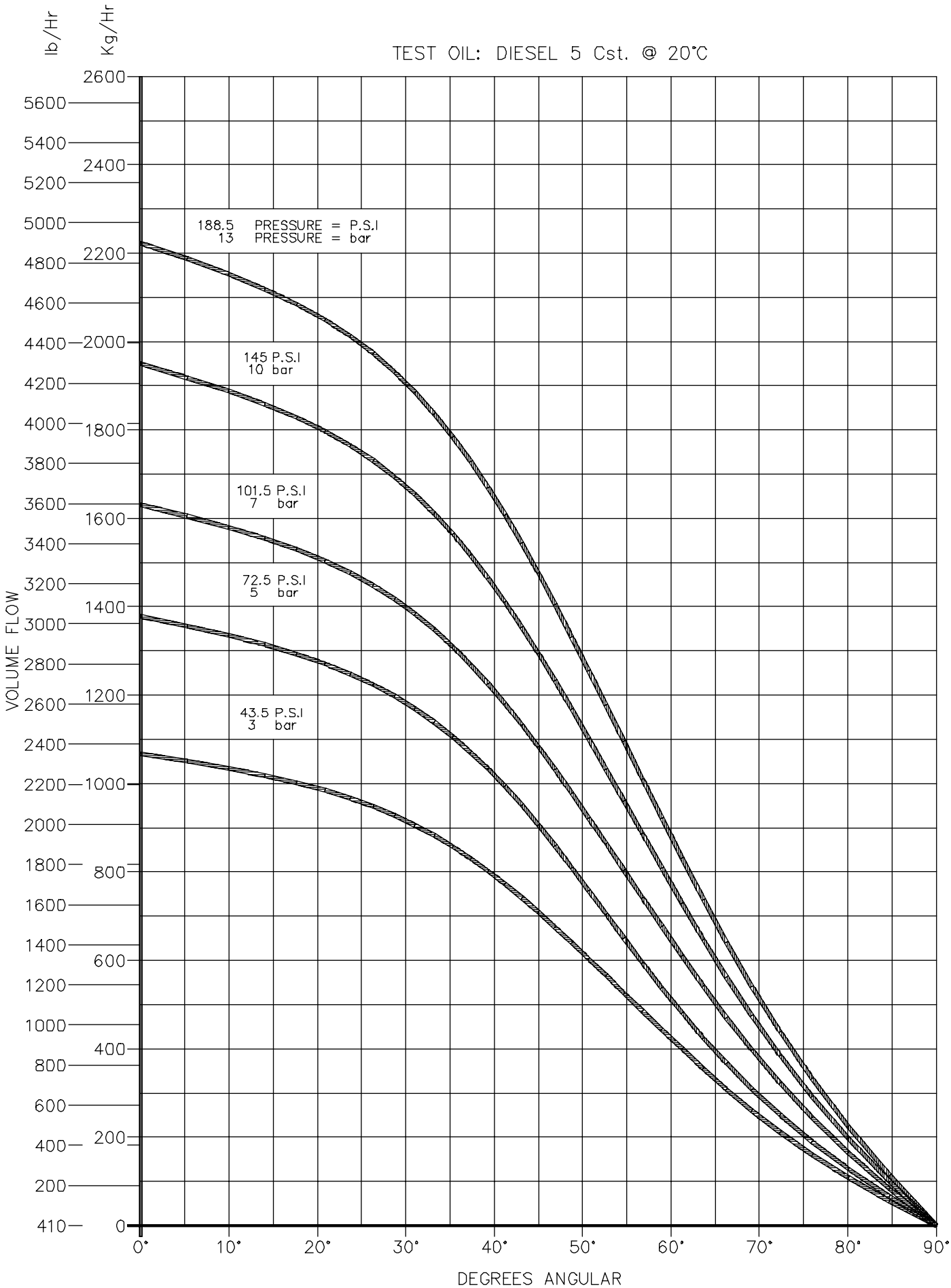

30: 3: 95/2702/GM

FLOW CHARACTERISTICS
M.M. VALVE TYPE 5 (SPILLBACK)

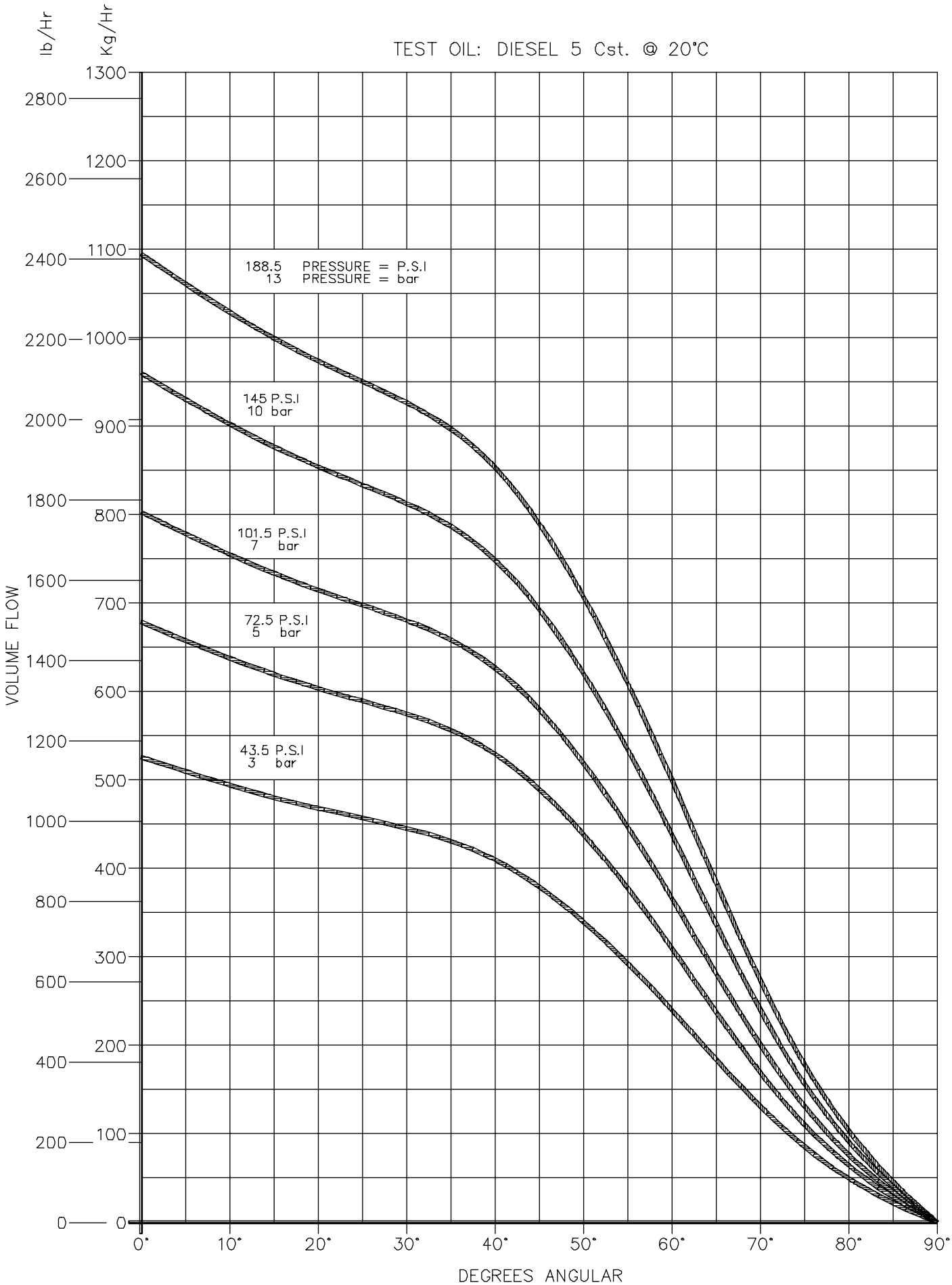

30: 3: 95/2703/GM

FLOW CHARACTERISTICS
M.M. VALVE TYPE 3 (METERING)

TEST OIL: DIESEL 5 Cst. @ 20°C

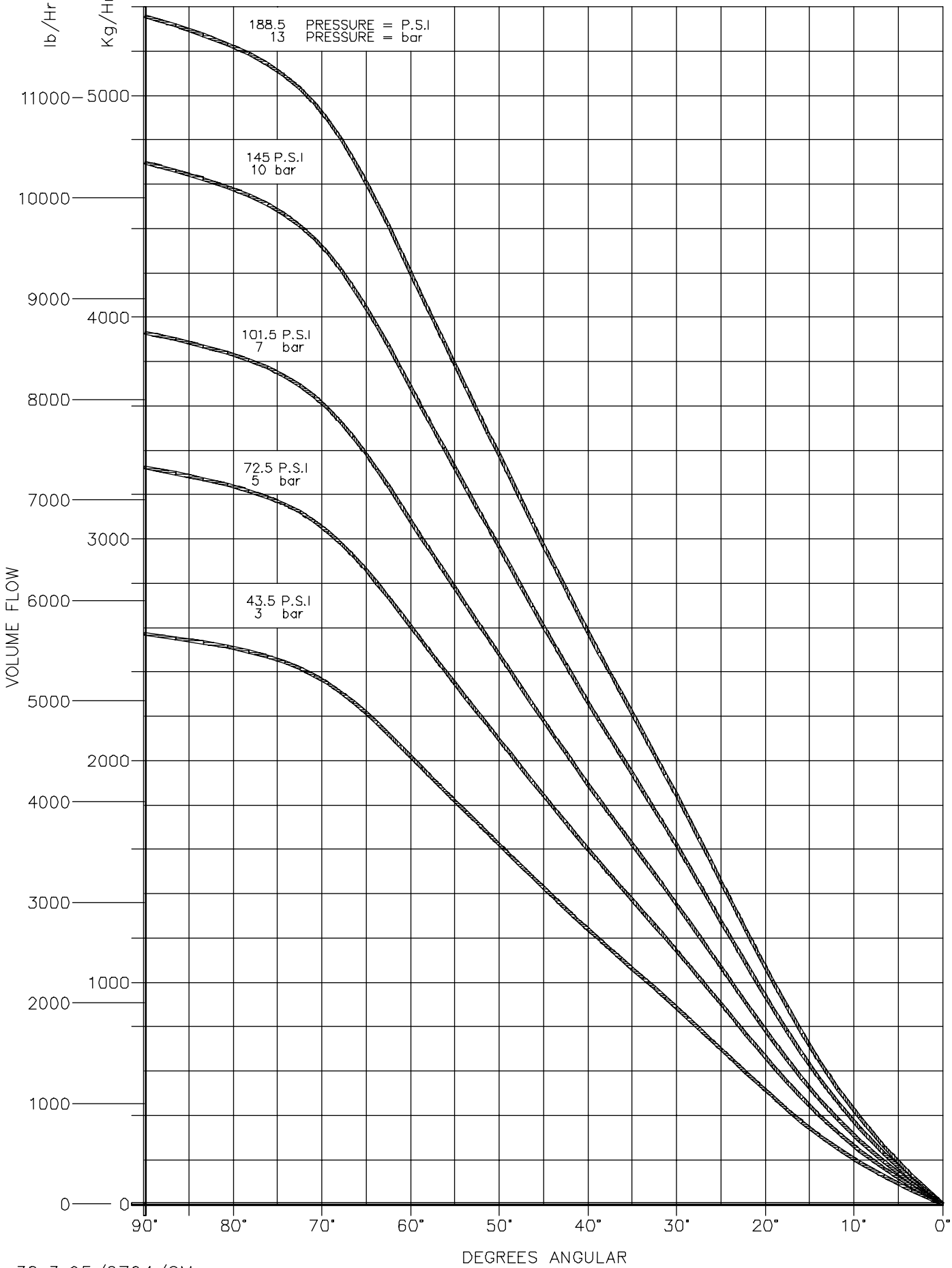

30: 3: 95/2704/GM

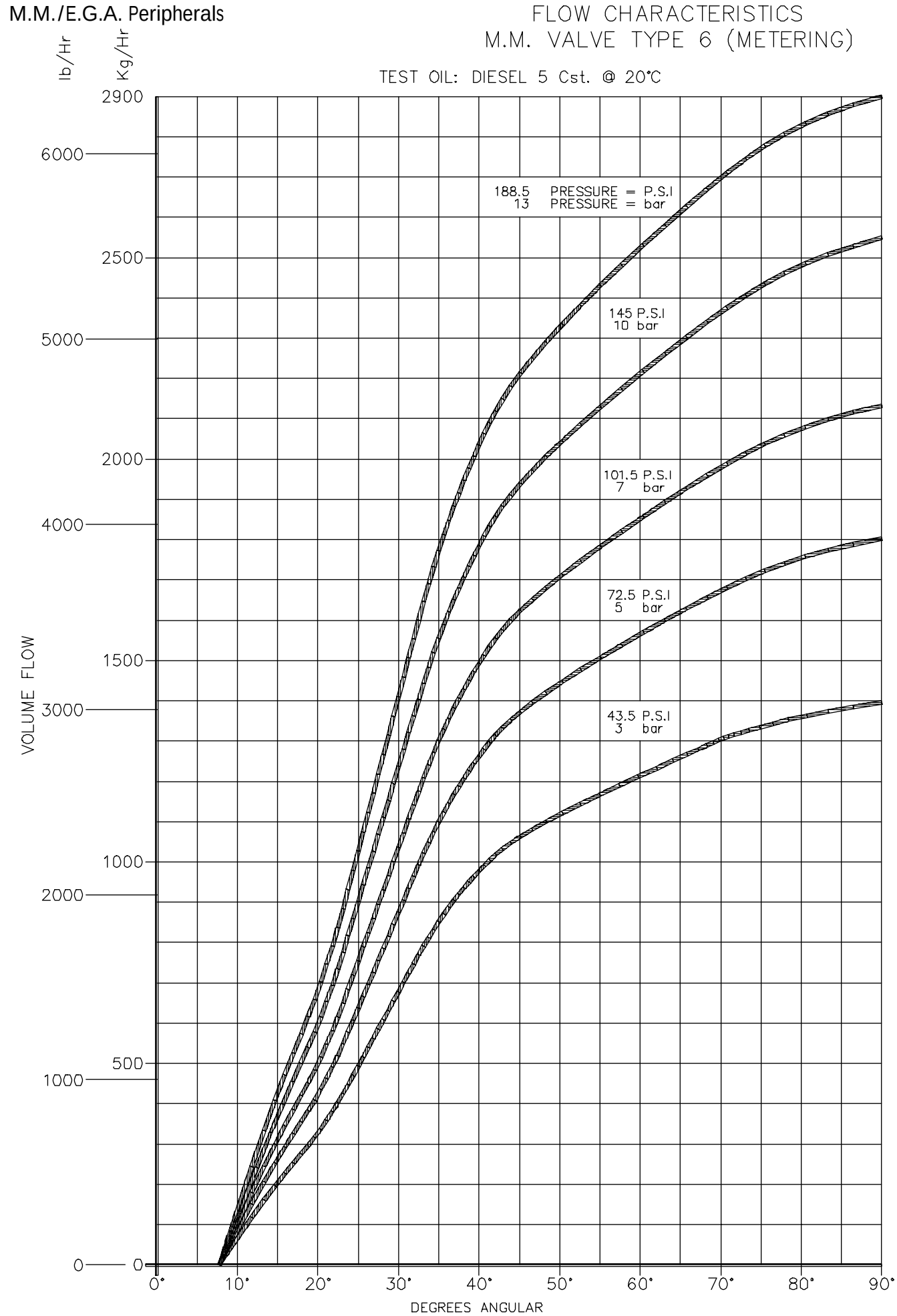

30: 3: 95/2705/GM

FLOW CHARACTERISTICS
M.M. VALVE TYPE 8 (METERING)

TEST OIL: DIESEL 5 Cst. @ 20°C

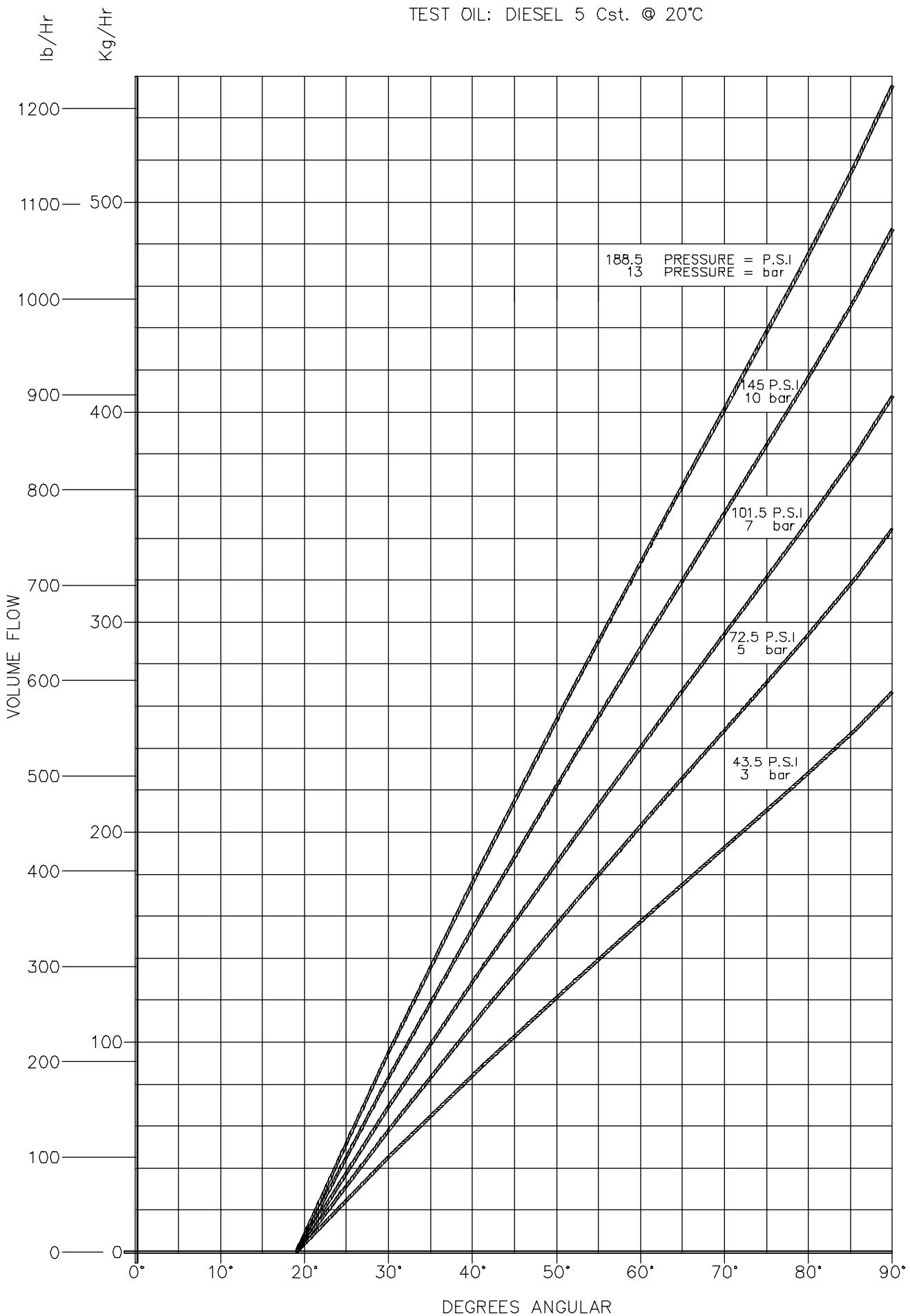

30: 3: 95/2706/GM

FLOW CHARACTERISTICS
M.M. VALVE TYPE 9 (SPILLBACK)

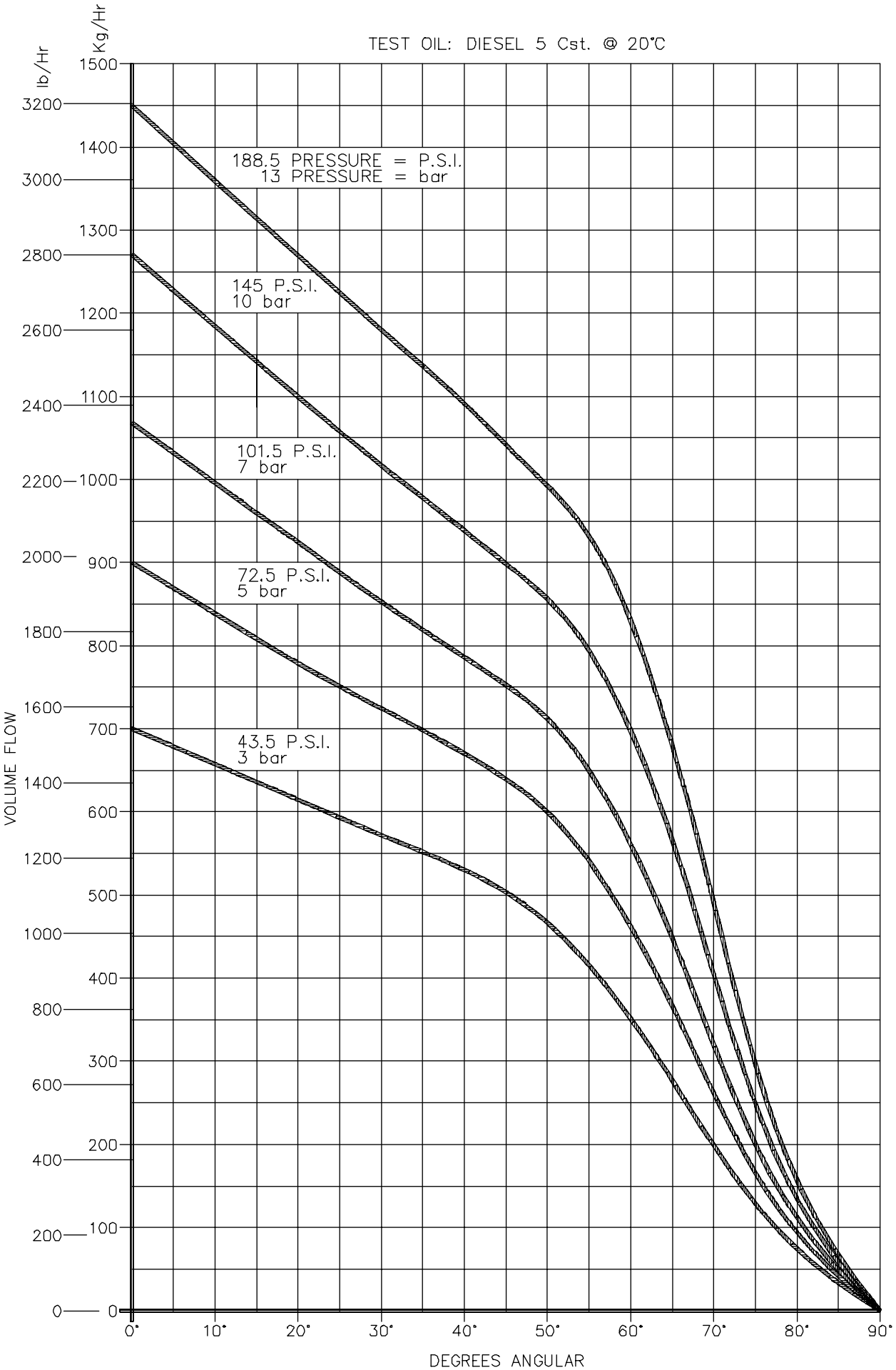

26:11:96/3136/GM

SMALL POSITIONING MOTOR
OUTLINE & MOUNTING DRAWING
PART No.MM10005

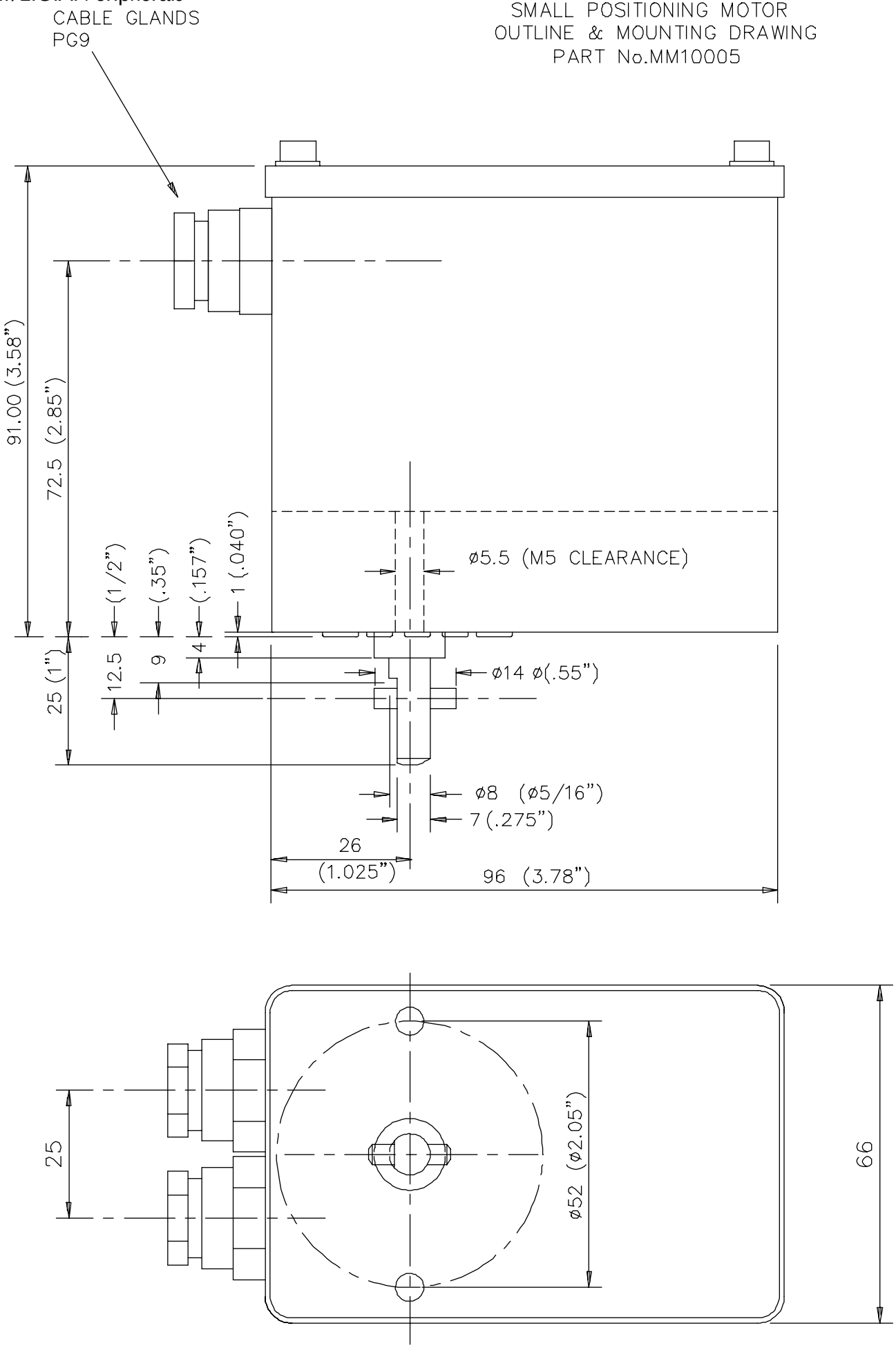

23: 3: 95/1807/SBK

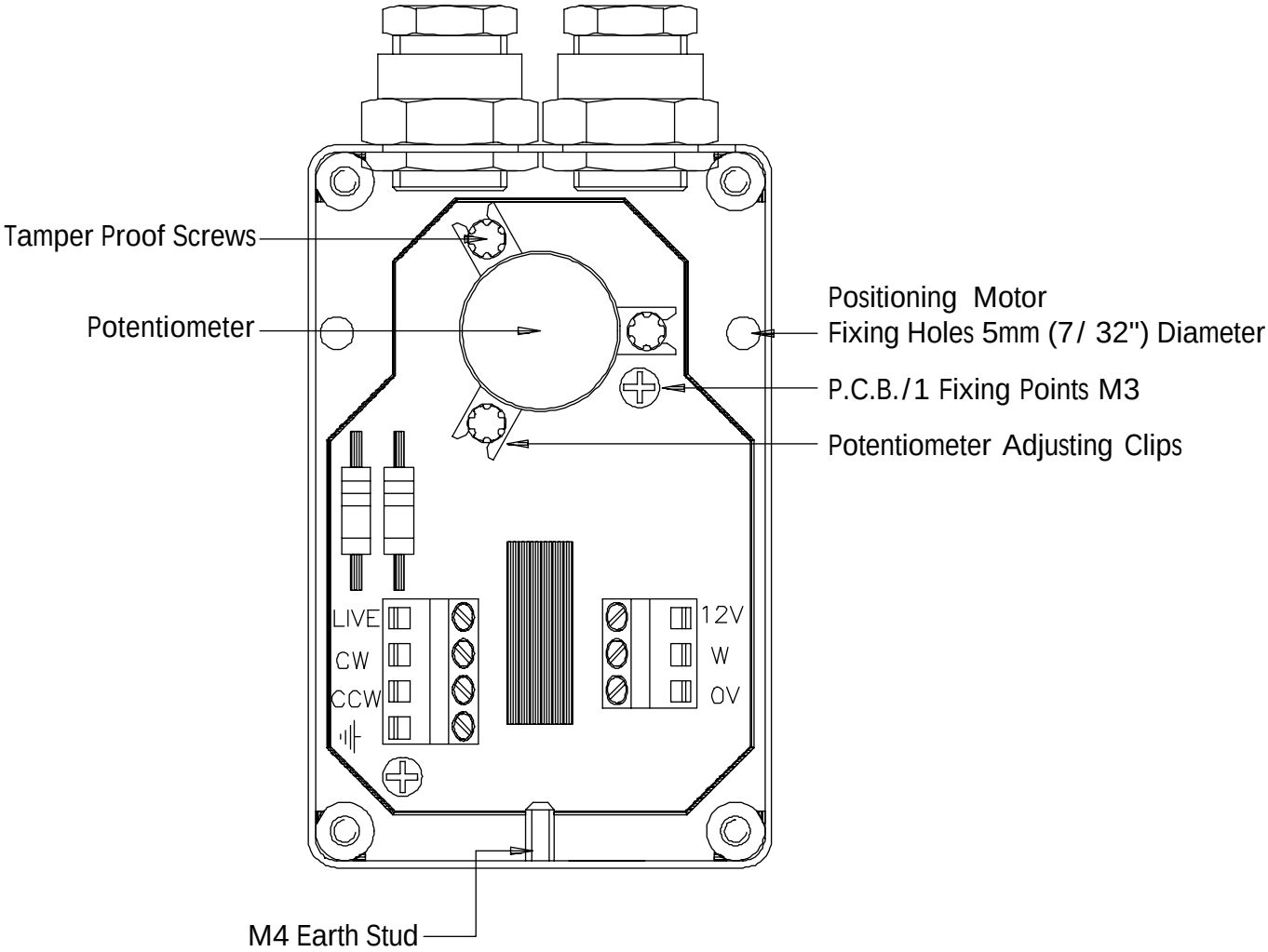

Specification	
Supply Voltage	24/230V, 50/60Hz
Output Shaft Torque	1.2Nm
Operating Angle	0-90°
Operating Time	Nominal 20 seconds
Max Rated Power	3W
Ambient Temperature	0°C to 60°C / 32°F to 140°F
Industrial Protection Rating	IP54 / NEMA 13
Mounting Angle	360°
Positioning	MM Drive
Drive Motor	Synchronous
Body Material	Mild Steel CR4
Coating	Interpon 700 Powder Coat
Weight	0.55kg
Dimensions	99x92x64mm
Wiring Connection	PG11 Gland

LARGE SERVO MOTOR
OUTLINE & MOUNTING DRAWING
PART No.MM10004

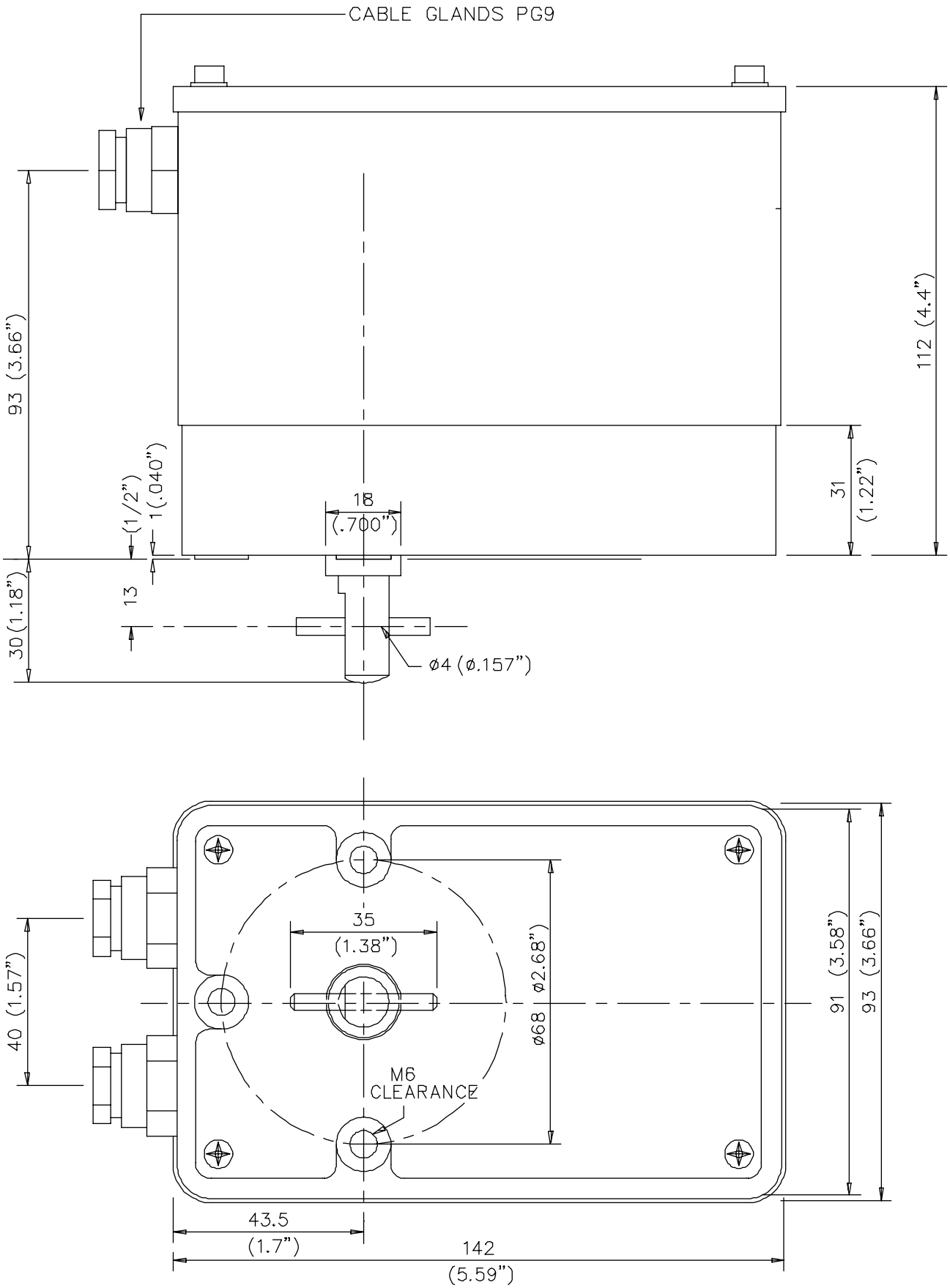

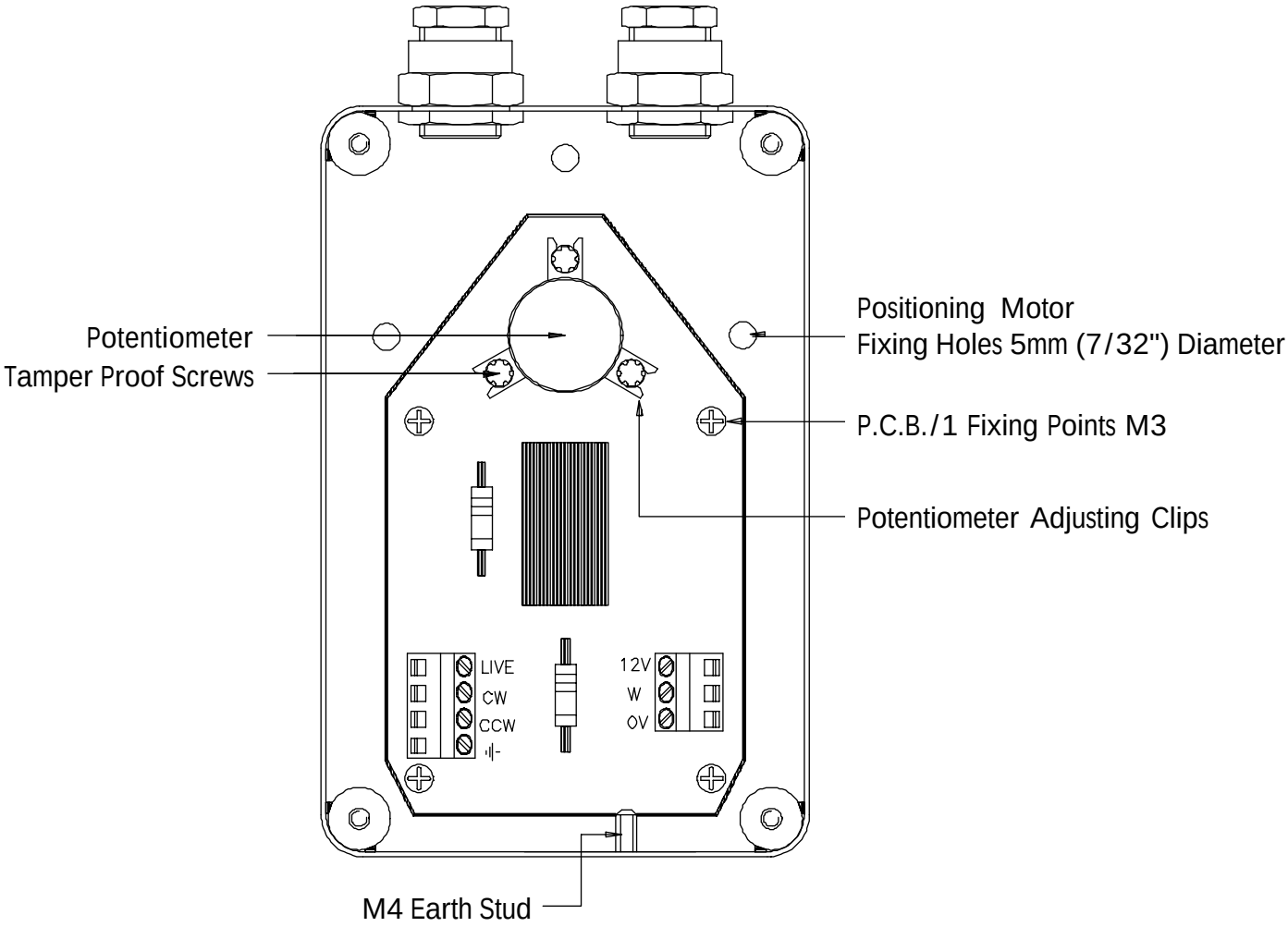

Specification	
Supply Voltage	24/230V, 50/60Hz
Output Shaft Torque	15Nm
Operating Angle	0-90°
Operating Time	Nominal 30 seconds
Max Rated Power	9W
Ambient Temperature	0°C to 60°C / 32°F to 140°F
Industrial Protection Rating	IP54 / NEMA 13
Mounting Angle	360°
Positioning	MM Drive
Drive Motor	Synchronous
Body Material	Mild Steel CR4
Coating	Interpon 700 Powder Coat
Weight	1.85kg
Dimensions	145x112x94
Wiring Connection	PG11 Gland

Autoflame Boiler Water Temperature Sensor
Part No. MM10006

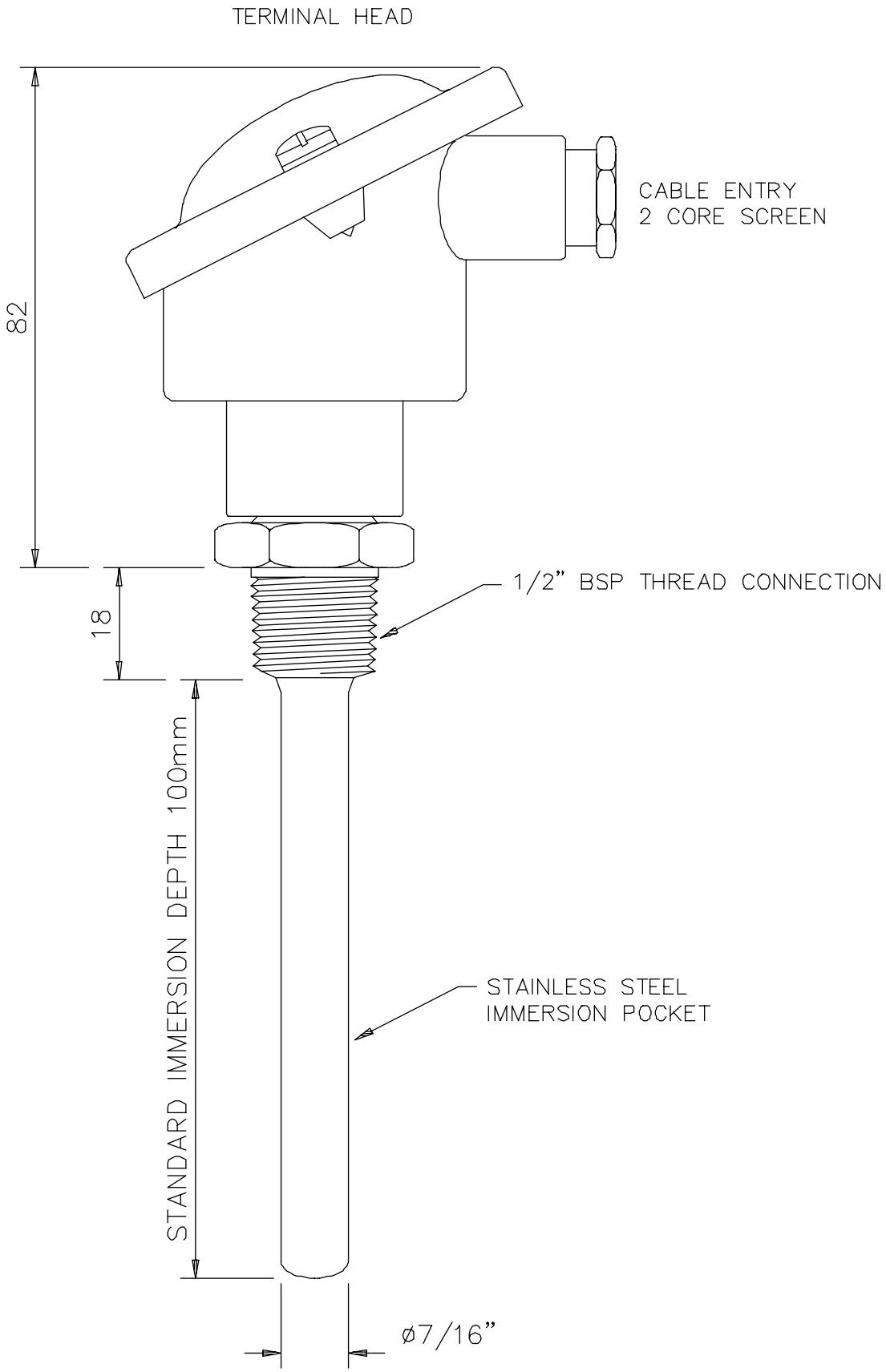

18:11:96/1999/GM

Connections		
Sensor	**Mk6/Mini Mk6**	**Mini Mk5**
Green	38	61
Yellow	37	OV
Brown	39	+V
White	unused	
Screen	S	38

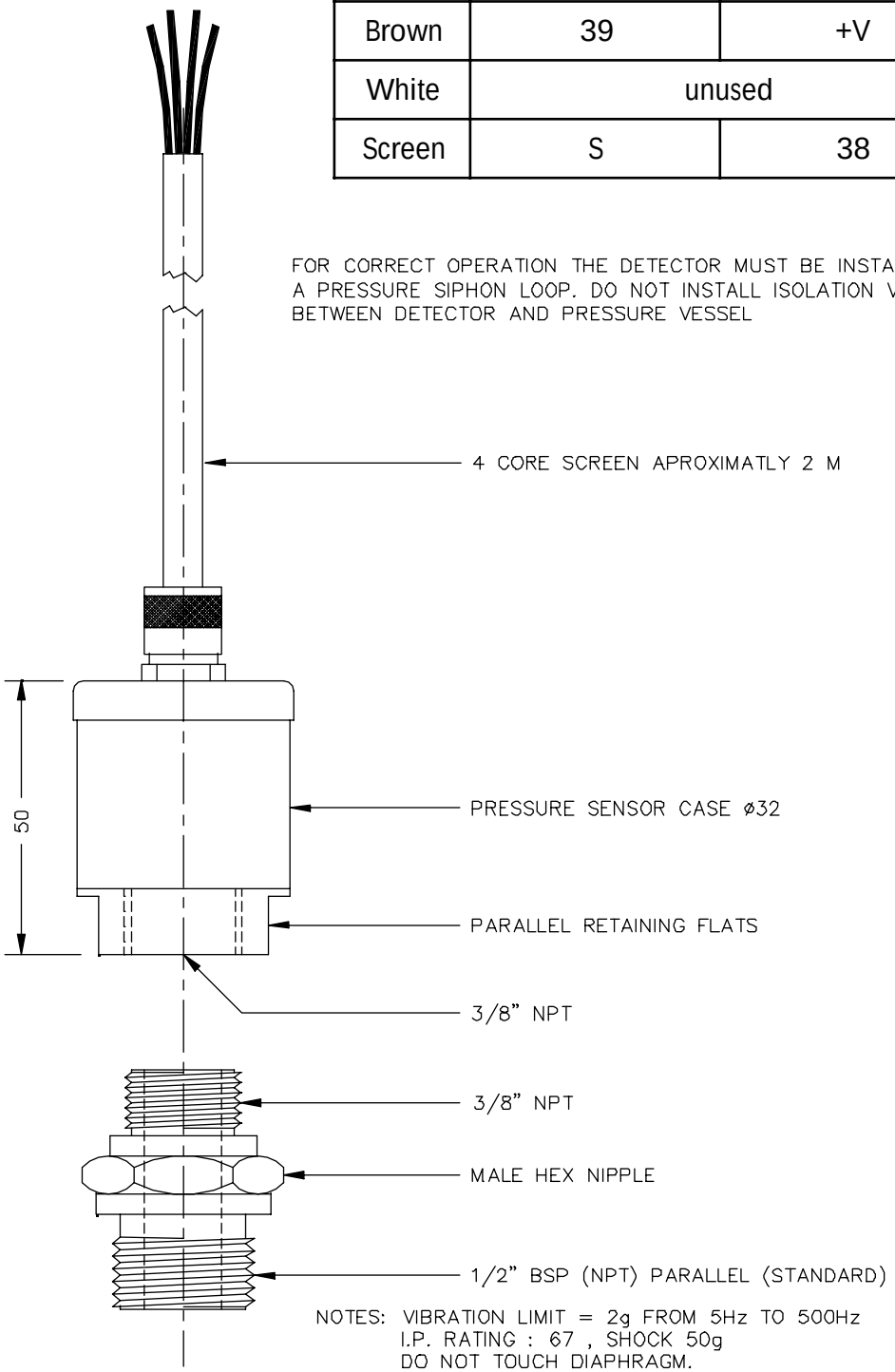

NB: Any physical damage to the stainless steel diaphram may result in sensor failure. The maximum depth that a male fitting can be screwed into the sensor is 10mm.

NOTES: VIBRATION LIMIT = 2g FROM 5Hz TO 500Hz
I.P. RATING : 67 , SHOCK 50g
DO NOT TOUCH DIAPHRAGM.
DO NOT USE CASE TO TIGHTEN PRESSURE CONNECTION.
CABLE TYPE: 3–CORE SCREENED, 7/0.2 PVC INSULATED OVERALL BRAID, PVC SHEATHED.
MAX. STORAGE TEMP. –55 TO +100 DEG. C
MAX. OPERATING TEMP. –40 TO +100 DEG. C
MEDIA TEMP (STEAM) –40 TO 125 DEG. C

20:7:99/3294/TF

8.10 INDUSTRIAL ACTUATOR

Part No. MM10072.

Overview/Outline

This system is a rotary type electric actuator, suitable for use with the M.M. module.

WARNING Must NOT be used without relays, and requires software version 309.

The body is made with aluminium die-cast, thus it is light, compact, highly efficient and powerful.

* Features *

* Light and compact.

* Easy to handle and suitable for use in narrow spaces.

* Simple structure design.

* Trouble free mounting on air damper, maintenance and testing.

* Manual operation function.
  Manual operation is possible when the power is disconnected, with the attached manual crank handle.

* Protect function.
  Thermal protector is built-in to prevent motor burn out by overloading.

* Easy for wiring.
  Connection is simplified by a terminal block inside.

8.10.1 External Drawings

Appearance and Nomenclature

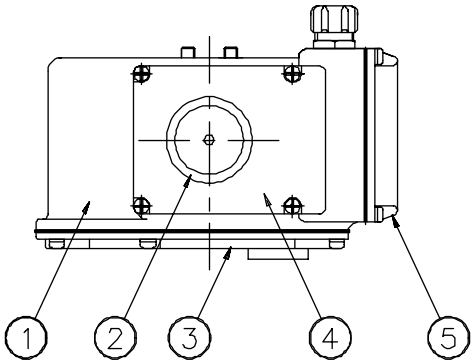

No.:	Name:
1	Body
2	Autoflame Feedback Potentiometer
3	Drive unit cover
4	Power Instruments cover
5	Control unit cover
6	Output shaft
7	Manual handle shaft
8	Cord lock

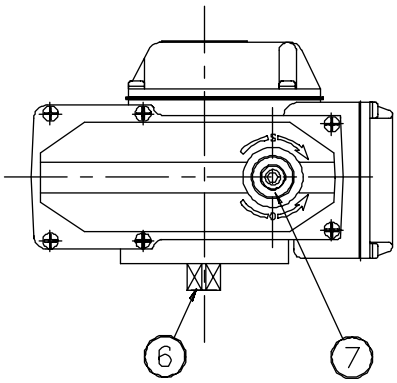

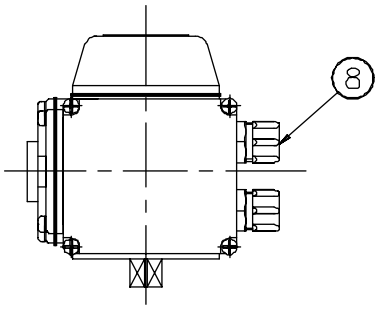

UNIC-10 DIMENSIONS

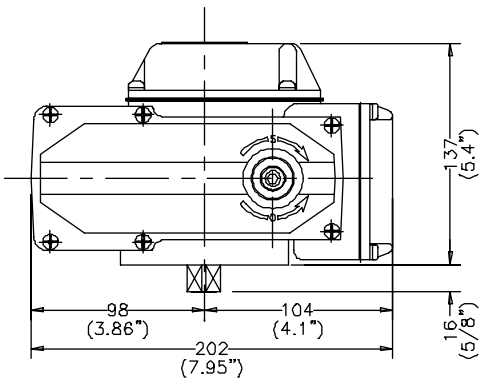

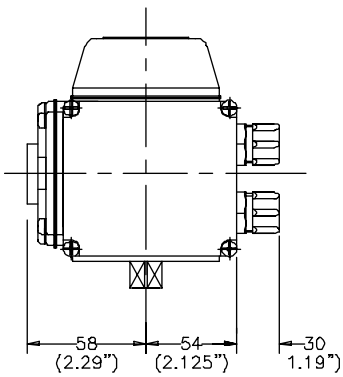

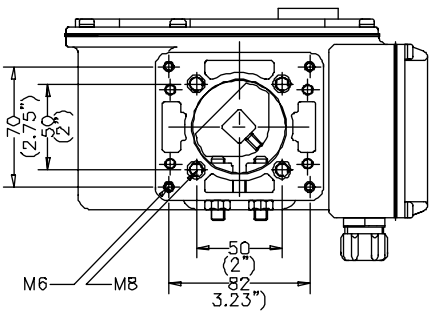

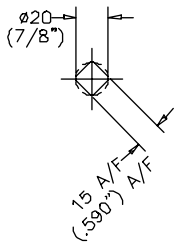

8.10.2 Specification

Type	**UNIC 10/30**
Power	220/240 VAC 50/60Hz(110V 60Hz)
Output Shaft Torque	10kg fm
Operating Angle	0-90°
Operating Time	30 sec/50Hz
Protect System	THERMAL PROTECTOR BUILT-IN
Ambient Temperature	-25°C - 50°C
Rated Power	0.4 A/100V
Insulation Resistance	100M W/500 V DC
Withstand Voltage	1500 V AC / Minute
Manual Operation	Crank Handle Attached
Stopper	Mechanical Stopper Open/Close Adjustable.
Enclosure	IP65 / NEMA 4
Mounting Angle	360° All Directions.
Positioning	M.M. Drive.
Drive Motor	20 W/E Type
Body Material	Aluminium Die-cast ADC12
Coating	Baking Varnish
Weight	4.5kg
Wiring Conduit	PF1/2 x1 Resin Connector Attached.

8.10.3 Installation

Place

* Ambient temperature: Within -25°C to +55°C (--13 F. to +131 F.)
* Avoid hazardous ambience.
* Depending on the condition of installation, consider to reserve spaces for wiring conduit cover, and manual maintenance works.

1. Mounting on Air Damper.

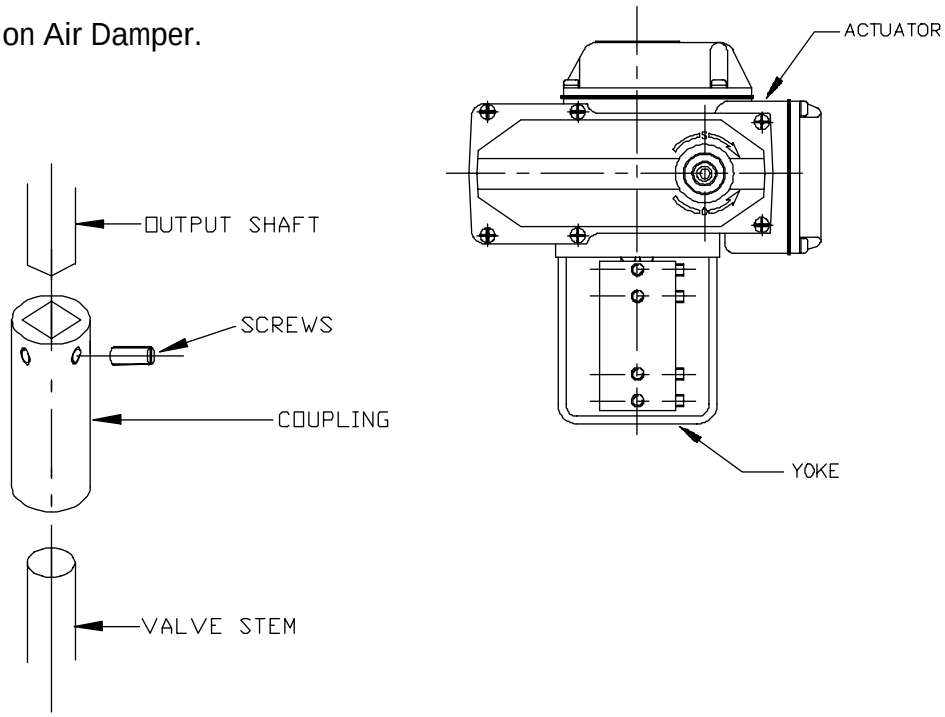

* Move the damper by hand and make sure that it is free then set it at totally closed position.
* Make sure that the shaft is smooth and no decentering/inclination, by turning the manual handle.

8.10.3.1 Positioning Motor Connections

SERVO WIRING DIAGRAM FOR
UNIC 10 SERVO MOTOR

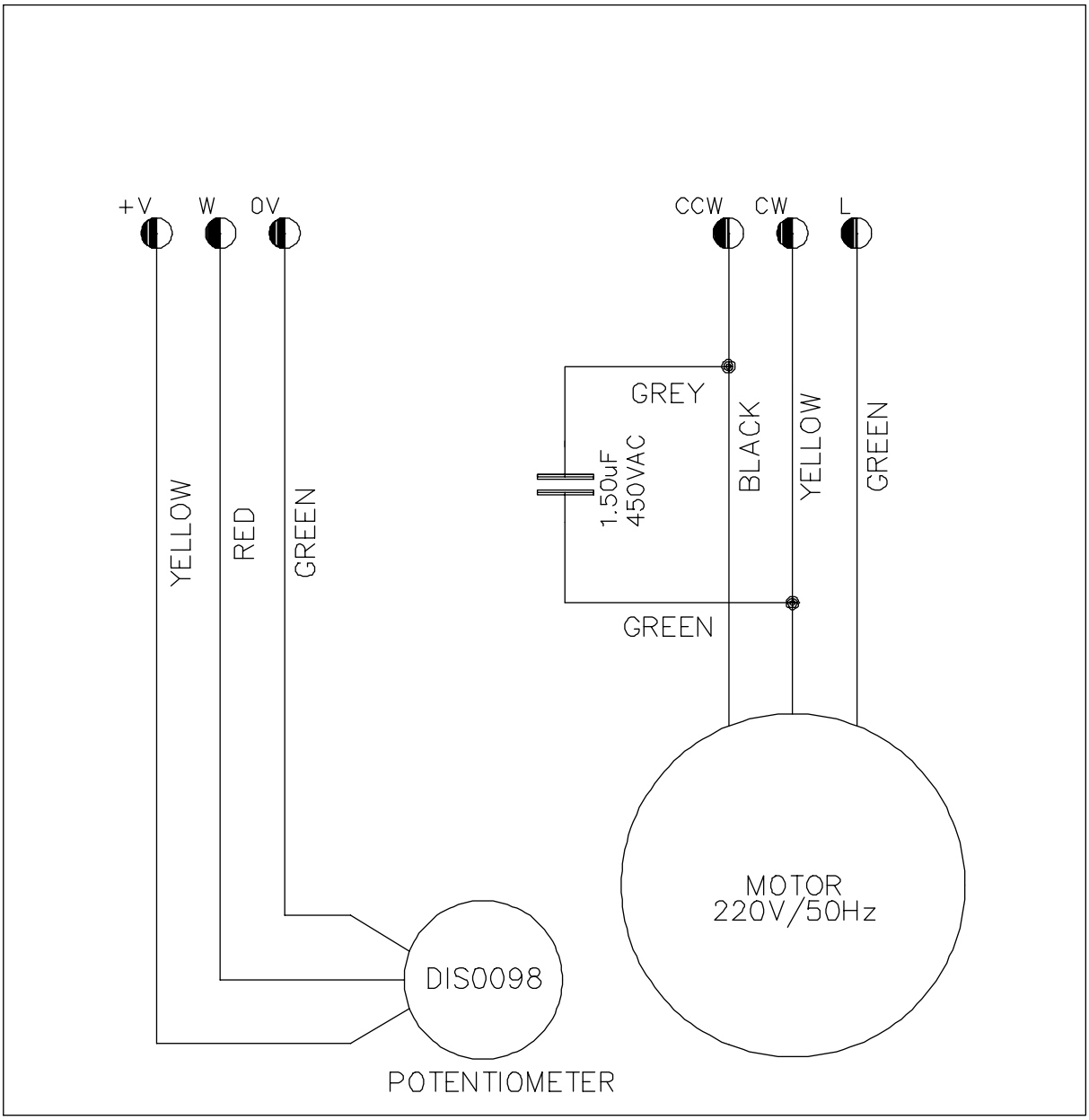

9:11:93/2332/SAH

8.10.3.2 Relay Kit Connection Diagram

To be used in conjunction with an Industiral Servo motor.

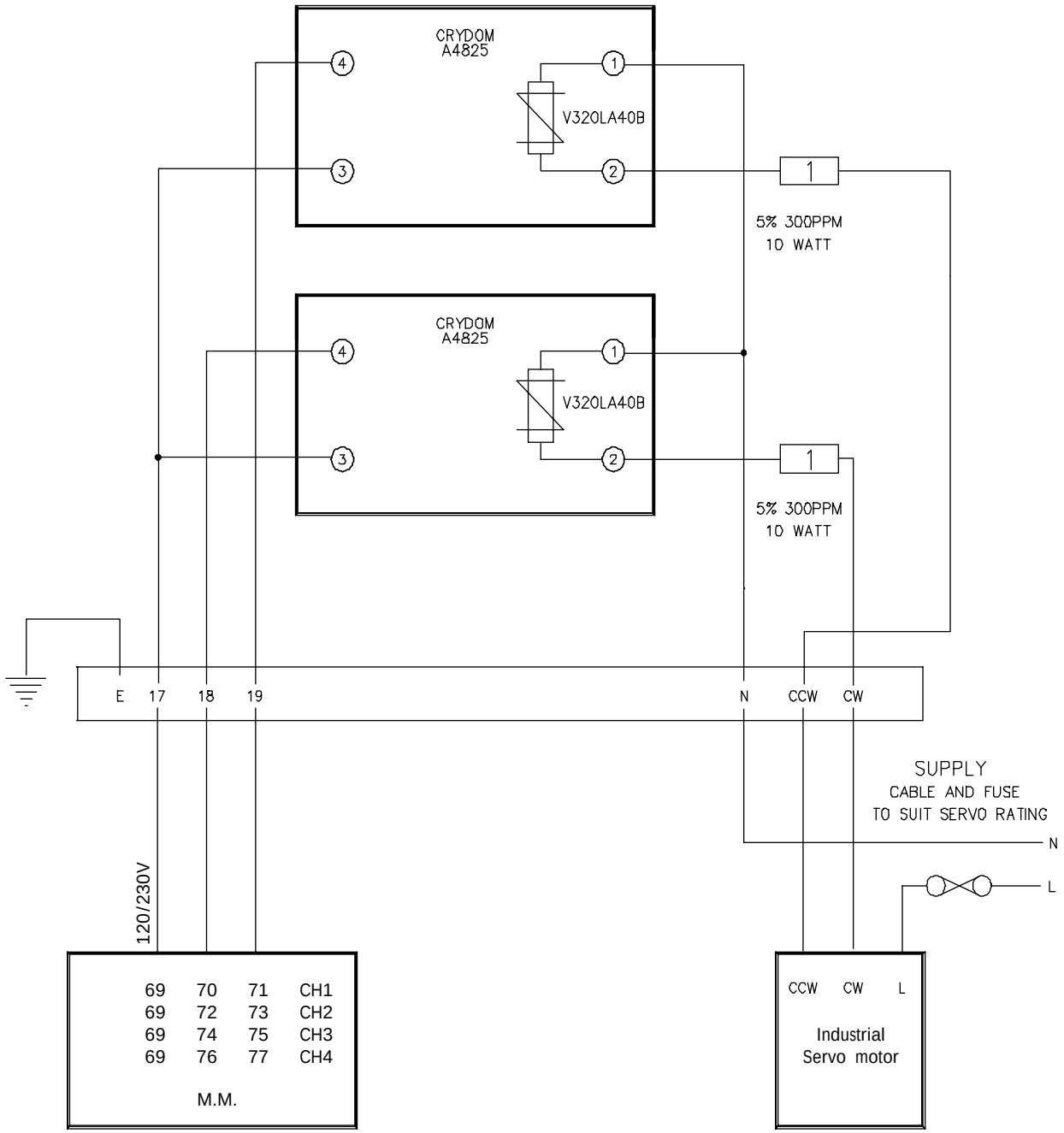

The connections shown above are for Channels 1-4 on a Mk6/Mini Mk6 MM. The softened error checking options must be set accordingly.

Industrial Servomotors are available in 110V and 230V options only.

The relay kit is not for use with 24V servo motors. The relay kit/industrial servo motor is not available for use with the Mini Mk5 MM.

11:10:94/2322/GM

8.10.3.3 Positioning Motor

IMPORTANT NOTE:

TO ADJUST POTENTIOMETER LOOSEN TAMPER PROOF SCREWS, AFTER ADJUSTMENT DO NOT OVER TIGHTEN. USE FINGERS ONLY TO ADJUST POSITION OF POTENTIOMETER. DO NOT RAISE POTENTIOMETER FROM P.C.B.

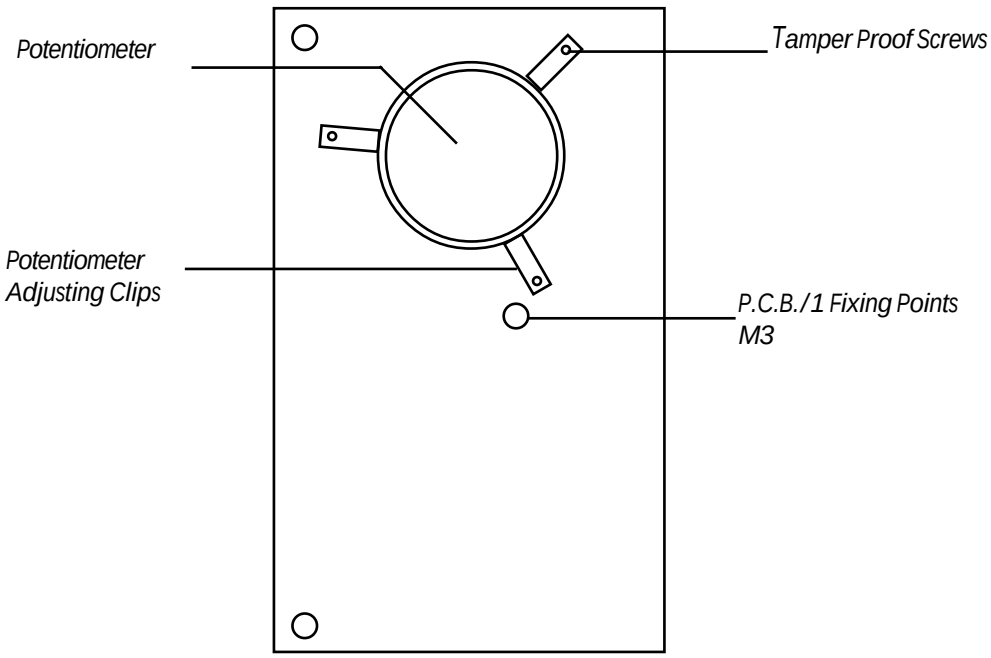

8.10.4 Manual Operation

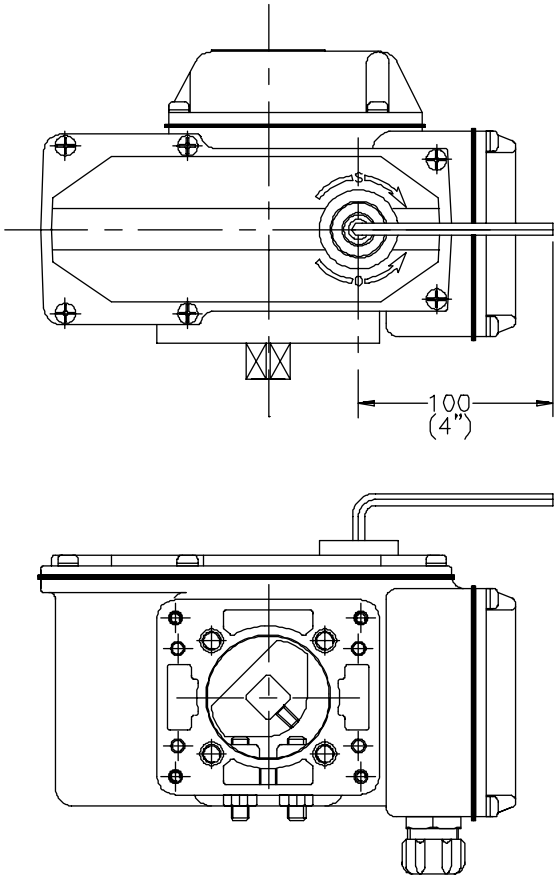

* Before starting manual operation, check that the power source is switched off.
* Remove rubber cap of the drive unit, and insert the manual handle level into the hexagonal hole.
* Turn the manual handle clockwise and the shaft moves to CLOSE di rection.

Do not overturn the handle with an excessive strength, as otherwise, it may cause trouble with the other parts.

Dimensions of Manual Handle

Opposite side of hexagon (mm)	5
Number of turns	15
Length of handle (mm)	100

Maintenance

* Lubrication: Since the unit is sufficiently lubricated with a long life and pressure proof di-sulfied molybdenum grease (MOS2), no further lubrication is required.
* Periodical Test: In case the motor is very seldomly rotated, it is suggested to have a periodical test and check if there is no irregularity.

8.10.5 Troubleshooting

Trouble	Probable Cause	Solution
Motor does not start		
*	Power switch is off	* Switch on
*	Wire/terminal are broken or disconnected.	* Replace the wire or properly connect the terminal.
*	Supplied voltage is too low or improper.	* Check the voltage with a tester.
*	Effect of thermal protector (Due to a high ambient temp. or damper jammed).	* Lower the ambient temperature, or manually make test of open/close movement.

Solid State Relays Specification

Load Current:	25A
Load Voltage:	80-530V AC
Thyristor Blocking Voltage:	800 V Peak
Single Cycle Surge:	245A
Overload current 1 sec.:	40 Arms

Solid State Relay Switching.
Unit supplied as standard with Unic 10 Pt. No. MM10072.

Section 9: Miscellaneous Component Information

MM Control Units

Description	KGs	Part No.
MK6 MM Module, 230V	3.5	MM60001
MK6 MM Module, 110V	3.5	MM60001/110
Mini MK6 MM Module, 230V	3.5	MMM60016
Mini MK6 MM Module, 110V	3.5	MMM60016/110
Mini Mk5 MM Module, 230V	3.5	MMM50016
Mini Mk5 MM Module, 120V	3.5	MMM50016/110
MK5-A MM Module, 230V	3.2	MM50001
MK5-A MM Module, 120V	3.2	MM50001/110
MK5-B MM Module, 230V	3.2	MM50001/B
MK5-B MM Module, 120V	3.2	MM50001/B110

UV Flame Scanners

Description	KGs	Part No.
Self Check UV Sensor	0.8	MM60003
Self Check UV Sensor, High Sensitivity	0.8	MM60003/HS
Standard UV Sensor, Side View	0.2	MM60004
Standard UV Sensor, End View	0.2	MM60004/U
Standard UV Sensor, End View, High Sensitivity	0.2	MM60004/HSU

Air/Gas/Oil Pressure Sensors

Description	KGs	Part No.
Air Pressure Sensor, 0 to 65 MBar, 0 to 25"wg, 0 to 1 PSI	0.42	MM60005
Gas Pressure Sensor, 12.5 to 65 MBar, 5 to 25"wg, 0.18 to 1 PSI	0.42	MM60006
Gas Pressure Sensor, 52 to 340 MBar, 25 to 135"wg, 0.75 to 5 PSI	0.42	MM60008
Gas Pressure Sensor, 115 to 750 MBar, 50 to 300"wg, 1.8 to 11 PSI	0.42	MM60011
Gas Pressure Sensor, 207 to 1380 MBar, 83 to 550"wg, 3 to 20 PSI	0.42	MM60012
Oil Pressure Sensor, 0 to 40 Bar, 0 to 600 PSI	0.42	MM60009

Outside Temperature Sensors

Description	KGs	Part No.
Outside Air Temperature Sensor	0.32	MM60007

Boiler Load Detectors

Description	KGs	Part No.
Temp. Detector, 100mm length	0.45	MM10006/100
Temp. Detector, 150mm length	0.45	MM10006/150
Temp. Detector, 200mm length	0.45	MM10006/200
Temp. Detector, 250mm length	0.45	MM10006/250
Temp. Detector, 400mm length	0.45	MM10006/400
Pressure Detector, 0-18 Bar	0.21	MM10008
Pressure Detector, 0-30 Bar	0.21	MM10009
Pressure Detector, 0-2 Bar	0.21	MM10010
Pressure Detector, 0-267 PSI	0.21	MM10008U
Pressure Detector, 0-435 PSI	0.21	MM10009U
Pressure Detector, 0-45 PSI	0.21	MM10010U

Servo Motors

Description	KGs	Part No.
Large Servo Motor 15 Nm, 230V 50/60 Hz	1.85	MM10004
Large Servo Motor 15 Nm, 24V 50/60 Hz	1.85	MM10004/D
Small Servo Motor 1.2 Nm, 230V 50Hz	0.55	MM10005
Small Servo Motor 1.2 Nm, 230V 60HZ	0.55	MM10005/B
Small Servo Motor 1.2 Nm, 24V 50/60Hz	0.55	MM10005/D
Industrial Servo Motor 10, 230V + Relay Kit	4	MM10072
Industrial Servo Motor 10, 120V + Relay Kit	4	MM10072/110
Industrial Servo Motor 20, 230V + Relay Kit	6	MM10074/B
Industrial Servo Motor 20, 120V + Relay Kit	6	MM10074/B/110
Industrial Servo Motor 40, 230V + Relay Kit	8	MM10078
Industrial Servo Motor 40, 120V + Relay Kit	8	MM10078/110

EGA Components

Description	KGs	Part No.
E.G.A. Sampling Unit Mk6, 230V	11	MM60002
E.G.A. Sampling Unit Mk6, 110V	11	MM60002/110
E.G.A. Sampling Probe (0-400°C)	1	MM10003
E.G.A. Sampling System Mk6, 230V	11	EGA20001
E.G.A. Sampling System Mk6, 110V	11	EGA20001/110
E.G.A. Sampling Probe (0-400°C)	1	EGA20002
E.G.A. Remote Display Pod	0.7	EGA20003
SO2 Sensor + Extra Pump (factory fitted)	0.2	EGA20008
NO Sensor (factory fitted)	0.2	EGA20005
Bubble Pot Acid Filtration System	15	EGA20102
EGA Mk6 External Particulate Filter	2	EGA20103
Ceramic Sampling Probe	1	EGA20105
EGA Mk6 High Temp. Thermocouple	4.5	EGA20104

Inverter, Splitter & Interface Modules

Description	KGs	Part No.
Inverter Interface Module, 230V	0.65	MM10011
Inverter Interface Module, 120V	0.65	MM10011/110
Splitter Module, 230V	0.65	MM10012
Splitter Module, 120V	0.65	MM10012/110
O2 Interface Module, 230V	0.65	MM10013
O2 Interface Module, 120V	0.65	MM10013/110

DTI Modules

Description	KGs	Part No.
Data Transfer Interface MK6, 230V	3	DTI60010/IR
Data Transfer Interface MK6, 120V	3	DTI60010/IR/110
Digital I/O Module, 230V	1	DTI20020
Digital I/O Module, 120V	1	DTI20020/110
Analogue I/O Module, 230V	1	DTI20021
Analogue I/O Module, 120V	1	DTI20021/110

PC Software and Accessories	0.01	DTI200126
Description	**KGs**	**Part No.**
MM Infrared Upload/Download Software and IR Lead	0.13	MM60010
WinPCDTI Software and Dongle	0.01	DTI600122
WinPCDTI + CEMS Software and Dongle	0.01	DTI600122/C
M.M. to P.C. Software and Lead	0.5	DTI20017
E.G.A. to P.C. Software and Lead	0.5	DTI20018
I.I.F. to P.C. Software and Lead	0.5	DTI20019
P.C. to D.T.I. Software and Lead	0.02	DTI20022
Emissions Calculator	1	DTI2000

Oil Control Valves

Description	KGs	Part No.
Type 1 - Spillback	0.6	OVS31015
Type 1 - Metering	0.6	OVM31015
Type 2 - Spillback	0.6	OVS32016
Type 2 - Metering	0.6	OVM32016
Type 3 - Spillback	1.8	OVS33L17
Type 3 - Metering	1.8	OVM33L17
Type 4 - Spillback	1.8	OVS34L18
Type 4 - Metering	1.8	OVM34L18
Type 5 - Spillback	0.5	OVS35019
Type 5 - Metering	0.5	OVM35019
Type 6 - Spillback	0.5	OVS36020
Type 6 - Metering	0.5	OVM36020
Type 7 - Spillback	1.8	OVS37L21
Type 7 - Metering	1.8	OVM37L21
Type 8 - Spillback	0.5	OVS38022
Type 8 - Metering	0.5	OVM38022
Type 9 - Spillback	0.5	OVS39023
Type 9 - Metering	0.5	OVM39023

Gas Control Valves - Screwed

Description	KGs	Part No.
BSP 25mm (1”)	0.55	GV42521
BSP 40mm (1.5”)	0.7	GV44022
BSP 50mm (2”)	0.74	GV45023
BSP 65mm (2.5”)	0.85	GV46524
BSP 80mm (3”)	0.98	GV48025
NPT 25mm (1”)	0.55	GV42521U
NPT 40mm (1.5”)	0.7	GV44022U
NPT 50mm (2”)	0.74	GV45023U
NPT 65mm (2.5”)	0.85	GV46524U
NPT 80mm (3”)	0.98	GV48025U

Gas Control Valves - 30mm Flanged

Description	KGs	Part No.
PN16 65 mm (2.5”)	5	GVF46526/30
PN16 80 mm (3”)	6	GVF48027/30
PN16 100 mm (4”)	7	GVF410026/30
PN16 125 mm (5”)	8	GVF12527/30
PN16 150 mm (6”)	9	GVF415028/30
ANSI 150lb 65 mm (2.5”)	5	GVF46526/30U
ANSI 150lb 80 mm (3”)	6	GVF48027/30U
ANSI 150lb 100 mm (4”)	7	GVF410026/30U
ANSI 150lb 125 mm (5”)	8	GVF12527/30U
ANSI 150lb 150 mm (6”)	9	GVF415028/30U

Gas Control Valves - 50mm Flanged

Description	KGs	Part No.
PN16 65 mm (2.5”)	9	GVF46526/50
PN16 80 mm (3”)	10	GVF48027/50
PN16 100 mm (4”)	11	GVF410026/50
PN16 125 mm (5”)	12	GVF12527/50
PN16 150 mm (6”)	13	GVF415028/50
ANSI 150lb 65 mm (2.5”)	9	GVF46526/50U
ANSI 150lb 80 mm (3”)	10	GVF48027/50U
ANSI 150lb 100 mm (4”)	11	GVF410026/50U
ANSI 150lb 125 mm (5”)	12	GVF12527/50U
ANSI 150lb 150 mm (6”)	13	GVF415028/50U

Sundires and Spare Parts

Description	KGs	Part No.
M.M./E.G.A. Technical Manual, Hard Copy	1	SP10001
M.M./E.G.A. Technical Manual, CD-ROM	0.1	SP10001/CD
Tamper Proof Screwdriver	0.07	SP10002
Transformer 230/120V-24V	0.65	SP10003
Ferrite Core Set	0.22	SU10010
Anti Voltage Surge Module	0.15	SU10011
Replacement HS UV Cell	1	SP10036

Cables

Description	KGs	Part No.
Screened Cable 1 core	0.05	CAB50001
Screened Cable 2 core	0.06	CAB50002
Screened Cable 3 core	0.07	CAB50003
Screened Cable 4 core	0.09	CAB50004
Sceened Cable 6 core	0.12	CAB50006
Screened Cable 8 core	0.14	CAB50008
Screened Cable 10 core	0.17	CAB50010
Screened Data Cable 1 pair	0.2	CAB50020

Relays

Description	KGs	Part No.
Relay LY2 12V DC	0.04	EC50200
Relay Base 12V	0.05	EC50201
Relay MY 240V AC	0.04	EC50206
Relay Base 240V	0.05	EC50207

MM System Spares

Description	KGs	Part No.
Mk6 MM Fuse Set	0.1	SP1031
Mini Mk6 MM Fuse Set	0.1	SP1032
Mini Mk5 MM Fuse Set	0.1	SP1033
Mk6 MM Connector Plugs	0.5	CON1060
Mini Mk6 MM Connector Plugs	0.5	CON1064
Mini Mk5 MM Connector Plugs	0.5	CON1063
Mk5 MM Connector Plugs	0.5	CON1050
MM Enclosure Mounting Clamps	0.1	ENC10061

EGA System Spares

Description	KGs	Part No.
O2 Sensor	0.02	SP10004
CO2 Sensor	0.09	SP10005
NO Sensor	0.04	SP10007
CO Sensor	0.04	SP10008
SO2 Sensor	0.01	SP10013
EGA Pump 230V	0.33	SP10009
EGA Pump 120V	0.33	SP10006
EGA Pump 24V	0.33	SP10010
EGA Replacement Internal Filter	0.06	SP10011
EGA Replacement Sampling Probe Filter	0.15	SP10012
EGA Replacement Particulate Filter	0.06	SP10018
Mk6 EGA Fuse Set	0.1	SP1040
EGA Connector Plugs	0.5	CON1010
EGA Type K Thermocouple only	0.25	SP1044
EGA Type K Thermocouple only	0.25	SP1044/5
EGA Type K Thermocouple only	0.25	SP1044/10
EGA Probe Sample Tube Set	0.01	SP10019
Mk6 EGA Spare Key	0.1	SP1045

DTI System Spares

Description	KGs	Part No.
Mk6 DTI Fuse Set	0.1	SP1060
Digital I/O Fuse Set	0.1	SP1061
Analogue I/O Fuse Set	0.1	SP1062
Mk6 DTI Connector Plugs	0.5	CON1065
Digital I/O Connector Plugs	0.5	CON1066
Analogue I/O Connector Plugs	0.5	CON1067

Servomotor Spares

Description	KGs	Part No.
Small Servo Fixing Screws	0.01	F5015
Small Servo Mounting Bracket/Coupling	0.5	SP10015
Small Valve to Large Servo Mounting Coupling	0.5	SP10017
Large Servo Fixing Screws	0.01	F6015
Large Servo Mounting Bracket/Coupling	0.5	SP10016
Industrial Servo Mounting Bracket	0.8	SP10028
Industrial Servo Mounting Bracket	1	SP10028/20

Gas/Oil Valve Spares

Description	KGs	Part No.
O-ring 50mm Gas Valve	0.01	OR70001
O-ring 30mm Gas Valve	0.01	OR70002
O-ring Type 1,2,5,6,8,9 Small Oil Valve	0.01	OR70003
O-ring Type 3,4,7 Large Oil Valve	0.01	OR70004

Demo/Test Equipment

Description	KGs	Part No.
Mk6 MM Demo Case, 230V	12	MM10022
Mk6 MM Demo Case, 120V	12	MM10023
Mini MK6 Demo Case, 230V	12	MM10030
Mini MK6 Demo Case, 120V	12	MM10030/110
Mini MK5 Demo Case, 230V	12	MM10029
Mini MK5 Demo Case, 120V	12	MM10029/110
Mini MK5 Demo Case, 230V	12	MM10031
Mini MK5 Demo Case, 120V	12	MM10031/110
DTI Demo Case, 230V	12	MM10027
DTI Demo Case, 120V	12	MM10027/110

Section 10: Appendix

10.1 Terms and Conditions

All equipment and services offered and sold by Autoflame Engineering are subject to our published terms and conditions of business a copy of which is supplied with each consignment of goods and a copy of which will be supplied seperately on request.

All terms and conditions are subject to English law.

10.3 Patent Numbers Relevant to the System

Patent No.:	Product:	Applicable Country:
02138610	M.M.	U.K. Australia
1317356	M.M.	Canada
02169726	E.G.A.	U.K.
00195866	E.G.A.	Europe - U.K. Switzerland Belgium France Germany Holland Luxembourg Sweden
GB97 15898.4	Mk6	Worldwide
PCT/GB97/02010	Mk6	Worldwide
GB97 15899.2	Mk6	U.K.
GB97 15900.8	Mk6	U.K.

CERTIFICATE OF GRANT OF UNITED KINGDOM PATENT

In accordance with section 24(2) of the Patents Act, 1977, it is hereby certified that a patent having the specification No. 2169726 has been granted to Autoflame Engineering Limited (United Kingdom) in respect of an invention disclosed in an application for that patent having a date of filing of 20 November 1985 being an invention for "Fuel burner controller".

Dated this Twenty-third day of November, 1988

P. J. COOPER
Comptroller-General of Patents
Designs and Trade Marks

THE ATTENTION OF THE PROPRIETOR IS DRAWN TO THE IMPORTANT NOTES OVERLEAF

Autoflame Engineering Limited (United Kingdom)
C/o Abel & Imray
Northumberland House,
303-306 High Holborn,
London, WC1V 7LH

A 244067

CERTIFICATE OF GRANT OF UNITED KINGDOM PATENT

In accordance with section 24(2) of the Patents Act, 1977, it is hereby certified that a patent having the specification No. 2138610 has been granted to Autoflame Engineering Limited (United Kingdom) in respect of an invention disclosed in an application for that patent having a date of filing of 21 April 1983 being an invention for "Improvements in or relating to fuel burner control systems".

Dated this Twenty-ninth day of October, 1986

P. J. COOPER
Comptroller-General of Patents
Designs and Trade Marks

THE ATTENTION OF THE PROPRIETOR IS DRAWN TO THE IMPORTANT NOTES OVERLEAF

Autoflame Engineering Limited (United Kingdom)
C/o Abel & Imray
Northumberland House
303-306 High Holborn
London
WC1V 7LH

A 226031

Consumer and Corporate Affairs Canada | Consommation et Affaires commerciales Canada

Patent Office | Bureau des brevets

Canadian Patent | **Brevet canadien**

1317356

To all to whom these presents shall come:

Whereas a petition has been presented to the Commissioner of Patents praying for the grant of a patent for a new and useful invention, the title and description of which are contained in the specification of which a copy is hereunto attached and made an essential part hereof, and the requirements of the Patent Act having been complied with.

Now therefore the present patent grants to the applicant whose title thereto appears from the records of the Patent Office and as indicated in the said copy of the specification attached hereto, and to the legal representatives of said applicant for a period of seventeen years from the date of these presents the exclusive right, privilege and liberty of making, constructing, using and vending to the others in Canada the invention, subject to adjudication in respect thereof before any court of competent jurisdiction.

Provided that the grant hereby made is subject to the conditions contained in the Act aforesaid.

All patents are subject to annual maintenance fees subsequent to the modified Patent Act.

In testimony whereof, these letters patent bear the signature of the Commissioner and the seal of the Patent Office hereunto affixed at Hull, Canada.

This Patent was issued on:

A tous ceux qui les présentes verront:

Considérant qu'une requête a été présentée au Commissaire des brevets, demandant la délivrance d'un brevet pour une invention nouvelle et utile, dont le titre et la description apparaissent dans le mémoire descriptif et dont copie est annexée aux présentes et en fait partie essentielle, et que ladite requête satisfait aux exigences de la Loi sur les brevets.

A ces causes, le présent brevet confère au demandeur dont le titre de propriété dudit brevet est établi d'après les dossiers du Bureau des brevets et est indiqué dans ladite copie du mémoire descriptif ci-annexée, et aux représentants légaux dudit demandeur, pour une période de dix-sept ans, à compter de la date des présentes, le droit, la faculté et le privilège exclusifs de fabriquer, construire, exploiter et vendre à d'autres, au Canada l'invention, sauf jugement en l'espèce par un tribunal de juridiction compétente.

La concession faite par les présentes étant soumise aux conditions contenues dans la loi précitée.

Des frais annuels de maintien seront applicables pour tout brevet octroyé subséquement à la Loi modifiant la Loi sur les brevets.

En foi de quoi, ces lettres patentes portent la signature du Commissaire ainsi que le sceau du Bureau des brevets apposé à Hull, Canada.

Ce Brevet à été delivré le:

Date MAY MAI - 4 1993

Commissioner of Patents - Commissaire des brevets

Canada

7530-21-608-0240 (5-82) 41

Europäisches Patentamt | European Patent Office | Office européen des brevets

URKUNDE

Es wird hiermit bescheinigt, daß für die in der beigefügten Patentschrift beschriebene Erfindung ein europäisches Patent für die in der Patentschrift bezeichneten Vertragsstaaten erteilt worden ist.

CERTIFICATE

It is hereby certified that a European patent has been granted in respect of the invention described in the annexed patent specification for the Contracting States designated in the specification.

CERTIFICAT

Il est certifié qu'un brevet européen a été délivré pour l'invention décrite dans le fascicule de brevet ci-joint, pour les Etats contractants désignés dans le fascicule de brevet.

Europäisches Patent Nr.:
European patent No.:
Brevet européen n°: 0195866

Patentinhaber:
Proprietor of the patent:
Titulaire du brevet:
Autoflame Engineering Limited
Unit 19, Bellingham Trading Estate
Franthorne Way Bellingham London SE6 3BX/GB

München, den
Munich,
Fait à Munich, le 29.05.91

Generaldirektion 2 – Formalprüfungsstelle
Directorate-General 2 – Formalities Section
Direction générale 2 – Section des formalités

EPA/EPO/OEB Form 2031 03.83

EQNet

THE EUROPEAN NETWORK FOR QUALITY SYSTEM ASSESSMENT AND CERTIFICATION

This is to state that

AUTOFLAME ENGINEERING LTD

holds the Quality System Certificate

FM 27218

for the standard from the
ISO 9000 / EN 29000
series, and the scope as specified therein

Signed for and on behalf of EQNet member

BSI QUALITY ASSURANCE

DATE: 2 September 1994

NUMBER: E10142/94

EQNet members are:

AENOR *Spain* **AFAQ** *France* **AIB-Vinçotte** *Belgium* **BSI QA** *United Kingdom*
CISQ *Italy* **DS** *Denmark* **DQS** *Germany* **ELOT** *Greece* **IPQ** *Portugal* **KEMA** *Netherlands*
NCS *Norway* **NSAI** *Ireland* **ÖQS** *Austria* **SFS** *Finland* **SIS** *Sweden* **SQS** *Switzerland*

The issuing member holds all other EQNet members harmless for any claims arising from the existence of this document

Certificate of Registration

BSI REGISTERED FIRM

Certificate Number FM 27218

AUTOFLAME ENGINEERING LTD

UNIT 19
BELLINGHAM TRADING ESTATE
FRANTHORNE WAY
BELLINGHAM
LONDON SE6 3BX

operate a quality management system which complies with the requirements of BS EN ISO 9001:1994

Signed on behalf of BSI, N Overton, General Manager

Originally registered 04 February 1994 Amended on 28 May 1998

This certificate remains the property of British Standards Institution and shall be returned immediately upon request. This certificate does not expire. To check its validity telephone +44 (0) 1908 227700. To be read in conjunction with attached Appendix.

The British Standards Institution is incorporated by Royal Charter.

BSI 389 Chiswick High Road London W4 4AL

Accredited by the Dutch Council for Certification

NATIONAL ACCREDITATION OF CERTIFICATION BODIES

Registration Number 003

EEZS: Issue 5

CE 0063

CERTIFICATE

EC TYPE-EXAMINATION CERTIFICATE

GASTEC NV, notified body **0063** hereby declares

that the **burner management system**

type **MM Mk6**

made by **Autoflame Engineering Ltd.**
Bellingham (London), United Kingdom,

comply with the essential requirements of the
Gas Appliances Directive (90/396/EEC).

The compliance is based on examination to:
EN 298 (October 1993);
DRAFT prEN 1643 (July 1997);
FINAL DRAFT prEN 12067-1;
EN 1854 (August 1997).

PIN : 0063AT5181
Report number : see appendix to certificate
Manufacturer file number : E 0455

The products have been approved for:

Austria	Belgium	Denmark
Finland	France	Germany
Greece	Iceland	Ireland
Italy	Luxemburg	Norway
Portugal	Spain	Sweden
Switzerland	The Netherlands	United Kingdom

A description of the specific types is given in the appendices
to this certificate.

Apeldoorn, **1 July 1998**

dr. L. Noordzij,
president.

Centre of Gas Technology

GASTEC

GASTEC NV
P.O. Box 137
7300 AC Apeldoorn
The Netherlands
Wilmersdorf 50
7327 AC Apeldoorn

CERTIFICATE

Number E 0455

CE 0063

GASTEC NV, hereby declares that the
Burner Management System, type

Mini Mk6 MM

made by **Autoflame Engineering Ltd.**

in **Bellingham (London), United Kingdom,**

complies with the essential requirements of the
Gas Appliances Directive (90/396/EEC).

The compliance is based on examination to:
EN 298 (October 1993)
FINAL DRAFT prEN 12067-1 (October 1997)

PIN : 0063BL1660
Report number : see appendix to certificate

The products have been approved for all EU and EFTA countries.

A description of the specific types is given in the appendix
to this certificate.

Apeldoorn, 1 July 2000

ing. F. Mutter,
Vice President International Operations.

GASTEC

GASTEC NV
P.O. Box 137
7300 AC Apeldoorn
The Netherlands
Wilmersdorf 50
7327 AC Apeldoorn

RvC

00/428

CERTIFICATE

Number E 0455

CE 0063

GASTEC NV, hereby declares that the
Fuel/air Ratio Controller, type

Mini Mk5 MM

made by **Autoflame Engineering Ltd.**

in **Bellingham (London), United Kingdom,**

complies with the essential requirements of the
Gas Appliances Directive (90/396/EEC).

The compliance is based on examination to:
ENV 1954 (June 1996)
FINAL DRAFT prEN 12067-1 (October 1997).

PIN : 0063BL1659
Report number : see appendix to certificate

The products have been approved for all EU and EFTA countries.

A description of the specific types is given in the appendices
to this certificate.

Apeldoorn, 15 July 2000

ing. F. Mutter
Vice President International Operations

GASTEC

GASTEC NV
P.O. Box 137
7300 AC Apeldoorn
The Netherlands
Wilmersdorf 50
7327 AC Apeldoorn

RvC

00/443

Underwriters Laboratories Inc.®

Santa Clara, California • (408) 985-2400
Research Triangle Park, North Carolina • (919) 549-1400
Camas, Washington • (360) 817-5500

100 a century of public safety est. 1894

AUTOFLAME ENGINEERING LTD
SOFTWARE ENGINEER
BELLINGHAM TRADING ESTATE UNIT 19
FRANTHORNE WAY
BELLINGHAM LONDON
SE6 3BX ENGLAND UNITED KINGDOM

Your most recent listing is shown below. Please review this information and report any inaccuracies to the UL Engineering staff member who handled your UL project.

MJAT March 18, 1997
Miscellaneous, Heating and Heating-Cooling Appliance Accessories

AUTOFLAME ENGINEERING LTD **MH16179 (N)**
BELLINGHAM TRADING ESTATE UNIT 19 FRANTHORNE WAY
BELLINGHAM LONDON, SE6 3BX ENGLAND UNITED KINGDOM
Electronic gas analyzers, Models EGA, MK5, MK6.
Micromodulator, Model Mark 5.
Mini MM controller.

LOOK FOR LISTING MARK ON PRODUCT

Replaces MH16179 dated October 31, 1996.
456637001 **Underwriters Laboratories Inc.®** K11/0275474
24

For information on placing an order for UL Listing Cards in a 3 × 5 inch card format, please refer to the enclosed ordering information.

UNDERWRITERS LABORATORIES INC.

A not-for-profit organization dedicated to public safety and committed to quality service

Underwriters Laboratories Inc.®

100 a century of public safety est. 1894

AUTOFLAME ENGINEERING LTD
SOFTWARE ENGINEER
BELLINGHAM TRADING ESTATE UNIT 19
FRANTHORNE WAY
BELLINGHAM LONDON
SE6 3BX ENGLAND UNITED KINGDOM

YIOZ April 23, 1996
Valves, Electrically Operated

AUTOFLAME ENGINEERING LTD , SE6 3BX ENGLAND UNITED KINGDOM **MH19399 (N)**
(A card)

General purpose valves.

General purpose valves. Part No. MM10006 actuator with valve Part No. OVM33L17, OVM34L18, OVM37L21, OVS33L17, OVS34L18, OVS37L21, OVF46526/50, OVF48027/50, OVF410026/50, OVF12527/50, OVF415028/50 or OVF420028/50; or with valve Part No. OVM33L17 and OVF46526/50, OVF48027/50, OVF410026/50, OVF12527/50, OVF415028/50 or OVF420028/50; or with valve Part Nos. OVM34L18 and OVF46526/50, OVF48027/50, OVF410026/50, OVF12527/50, OVF15028/50 or OVF420028/50; or with valve Part Nos. OVM37L21 and OVF46526/50, OVF48027/50, OVF410026/50, OVF12527/50, OVF415028/50 or OVF420028/50; or with valve Part Nos. OVS33L17 and OVF46526/50, OVF48027/50, OVF410026/50, OVF12527/50, OVF415028/50 or OVF420028/50; or with valve Part Nos. OVS37L21 and OVF46526/50, OVF48027/50, OVF410026/50, OVF12527/50, OVF415028/50 or OVF420028/50.

General purpose valves. Part No. MM10005 actuator with valve Part No. OVM31015, OVM32016, OVM35019, OVM36020, OVM39022, OVM39023, OVS31015, OVS32016.

(Cont. on B card)

456637001 **Underwriters Laboratories Inc.®** 611/0297299
129

UNDERWRITERS LABORATORIES INC.

A not-for-profit organization dedicated to public safety and committed to quality service

333 Pfingsten Road
Northbrook, Illinois 60062-2096, USA
708/272-8800
Telex: 6852603343
FAX No. (708) 272-8129

1285 Walt Whitman Road
Melville, L.I., New York 11747-3081, USA
516/271-6200
Telex No. 6852015
FAX No. (516) 271-6259

1655 Scott Blvd.
Santa Clara, California 95050-4109, USA
408/985-2400
FAX No. (408) 296-3256

12 Laboratory Drive
P.O. Box 13995
Research Triangle Park,
North Carolina 27709-3995, USA
919/549-1400
Telex No. 4937028
FAX No. (919) 549-1842

Underwriters Laboratories Inc.®

100 a century of public safety est. 1894

AUTOFLAME ENGINEERING LTD
SOFTWARE ENGINEER
BELLINGHAM TRADING ESTATE UNIT 19
FRANTHORNE WAY
BELLINGHAM LONDON
SE6 3BX ENGLAND UNITED KINGDOM

YIOZ April 23, 1996
Valves, Electrically Operated

AUTOFLAME ENGINEERING LTD **MH19399 (N)**

(Cont. from a card)

OVS35019, OVS39030, OVS38032, OVS39023, GV42521, GV44022, GV45023, GV46524, GV48025, GVF46526/30, GVF48027/30, GVF410026/30, GVF12527/30 GVF415028/30; or with valve Part Nos. OVM31015 and GV42521, GV44022, GV45023, GV46524, GV48025, GVF46526/30, GVF48027/30, GVF410026/30, GVF12527/30 or GVF415028/30; or with valve Part Nos. OVM33016 and GV42521, GV44022, GV45023, GV46524, GV48025, GVF46526/30, GVF48027/30, GVF410026/30, GVF12527/30 or GVF415028/30; or with valve Part Nos. OVM35019 and GV42521, GV44022, GV45023, GV46524, GV48025, GVF46526/30, GVF48027/30, GVF410026/30, GVF12527/30 or GVF415028/30; or with valve Part Nos. OVM38030 and GV44022, GV45023, GV46524, GV48025, GVF46526/30, GVF48027/30, GVF410026/30, GVF12527/30 or GVF415028/30; or with valve Part Nos. OVM39022 and GV42521, GV44022, GV45023, GV46524, GV48025, GVF46526/30, GVF48027/30, GVF410026/30, GVF12527/30 or GVF415028/30; or with valve Part Nos. OVM39023 and GV42521, GV44022, GV45023, GV46524, GV48025, GVF46526/30, GVF48027/30, GVF410026/30, GVF12527/30 or GVF415028/30; or with valve Part Nos. OVS32016 and GV42521, GV44022, GV45023, GV46524, GV48025, GVF46526/30, GVF48027/30, GVF410026/30, GVF12527/30 or GVF415028/30; or with valve Part Nos. OVS35019 and GV42521, GV44022, GV45023, GV46524, GV48025, GVF46526/30, GVF48027/30, GVF410026/30, GVF12527/30 or GVF415028/30; or with valve Part Nos. OV35019 and GV42521, GV44022, GV45023, GV46524, GV48025, GVF46526/30, GVF48027/30, GVF410026/30, GVF12527/30 or GVF415028/30;

(Cont. on C card)

416637001 **Underwriters Laboratories Inc.®** 611/0291300
130

UNDERWRITERS LABORATORIES INC.

A not-for-profit organization dedicated to public safety and committed to quality service

333 Pfingsten Road
Northbrook, Illinois 60062-2096, USA
708/272-8800
Telex: 6502543343
FAX No. (708) 272-8129

1285 Walt Whitman Road
Melville, L.I., New York 11747-3081, USA
516/271-6200
Telex No. 6852015
FAX No. (516) 271-6259

1655 Scott Blvd.
Santa Clara, California 95050-4169, USA
408/985-2400
FAX No. (408) 296-3256

12 Laboratory Drive
P.O. Box 13995
Research Triangle Park,
North Carolina 27709-3995, USA
919/549-1400
Telex No. 4937920
FAX No. (919) 549-1842

Underwriters Laboratories Inc.®

100 a century of public safety est. 1894

AUTOFLAME ENGINEERING LTD
SOFTWARE ENGINEER
BELLINGHAM TRADING ESTATE UNIT 19
FRANTHORNE WAY
BELLINGHAM LONDON
SE6 3BX ENGLAND UNITED KINGDOM

YIOZ April 23, 1996
Valves, Electrically Operated

AUTOFLAME ENGINEERING LTD **MH19399 (N)**

(C—cont. from b card)

or with valve Part Nos. OVS39020 and GV42521, GV44022, GV45023, GV48524, GV48025, GVF46528/30, GVF46027/30, GVF410028/30, GVF12527/30 or GVF415028/30; or with valve Part Nos. OVS38020 and GV42521, GV44022, GV45023, GV48524, GV48025, GVF46528/30, GVF46027/30, GVF410028/30, GVF12527/30 or GVF415028/30; or with valve Part Nos. OV38022 and GV42521, GV44022, GV45023, GV48524, GV48025, GVF46528/30, GVF38027/30, GVF10028/30, GVF12527/30 or GVF415028/30; or with valve Part Nos. OVS39023 and GV42521, GV44022, GV45023, GV48524, GV48025, GVF46528/30, GVF46027/30, GVF410028/30, GVF12527/30 or GVF15028/30.

BELLINGHAM TRADING ESTATE UNIT 19 FRANTHORNE WAY
BELLINGHAM LONDON

LOOK FOR LISTING MARK ON PRODUCT

61663/001 **Underwriters Laboratories Inc.®** K11/0297569
131

UNDERWRITERS LABORATORIES INC.

A not-for-profit organization dedicated to public safety and committed to quality service

333 Pfingsten Road
Northbrook, Illinois 60062-2096, USA
708/272-8800
Telex: 6502543343
FAX No. (708) 272-8129

1285 Walt Whitman Road
Melville, L.I., New York 11747-3081, USA
516/271-6200
Telex No. 6852015
FAX No. (516) 271-6659

1655 Scott Blvd.
Santa Clara, California 95050-4169, USA
408/985-2400
FAX No. (408) 296-3256

12 Laboratory Drive
P.O. Box 13995
Research Triangle Park,
North Carolina 27709-3995, USA
919/549-1400
Telex No. 4937920
FAX No. (919) 549-1942

Underwriters Laboratories Inc.®

100 a century of public safety est. 1894

AUTOFLAME ENGINEERING LTD
SOFTWARE ENGINEER
BELLINGHAM TRADING ESTATE UNIT 19
FRANTHORNE WAY
BELLINGHAM LONDON
SE6 3BX ENGLAND UNITED KINGDOM

YSYI2 April 23, 1996
Component – Valve Parts, Electrically Operated

AUTOFLAME ENGINEERING LTD **MH19400 (N)**
BELLINGHAM TRADING ESTATE UNIT 19
FRANTHORNE WAY BELLINGHAM LONDON , SE6
3BX ENGLAND UNITED KINGDOM

Actuator assemblies, Part Nos. MM10004, -10005.
Valve assemblies, Part Nos. OV followed by M or S, followed by 31015, 32016, 33L17, 34L18, 35019, 36020, 37L21, 38022 or 39023. Part Nos. OV4 followed by 3521, 4022, 5023, 6524 or 8025. Part Nos. OVF followed by 46526/30, 46526/50, 49027/30, 410028/30, 12527/30, 415028/30, 46526/50, 49027/50, 410028/50, 12527/50, 415028/50 or 420028/50.
Marking: Company name and part designation.

LOOK FOR THE RECOGNITION MARK

See General Information Preceding These Recognitions.

For use only in equipment where the acceptability of the combination is determined by Underwriters Laboratories Inc.

Reports: **April 5, 1996; April 7, 1996.**

45653701 **Underwriters Laboratories Inc.®** 01/02/97/85
83

UNDERWRITERS LABORATORIES INC.

A not-for-profit organization dedicated to public safety and committed to quality service

333 Pfingsten Road
Northbrook, Illinois 60062-2096, USA
708/272-8800
Telex: 6502543043
FAX No. (708) 272-8129

1285 Walt Whitman Road
Melville, L.I., New York 11747-3081, USA
516/271-6200
Telex No. 6852015
FAX No. (516) 271-6659

1655 Scott Blvd.
Santa Clara, California 95050-4169, USA
408/985-2400
FAX No. (408) 296-3256

12 Laboratory Drive
P.O. Box 13995
Research Triangle Park,
North Carolina 27709-3995, USA
919/549-1400
Telex No. 4937920
FAX No. (919) 549-1842

Northbrook, Illinois • (847) 272-8800
Melville, New York • (516) 271-6200
Santa Clara, California • (408) 985-2400
Research Triangle Park, North Carolina • (919) 549-1400
Camas, Washington • (360) 817-5500

Underwriters Laboratories Inc.®

100 a century of public safety est. 1894

AUTOFLAME ENGINEERING LTD
SOFTWARE ENGINEER
BELLINGHAM TRADING ESTATE UNIT 19
FRANTHORNE WAY
BELLINGHAM LONDON
SE6 3BX ENGLAND UNITED KINGDOM

Your most recent listing is shown below. Please review this information and report any inaccuracies to the UL Engineering staff member who handled your UL project.

MCCZ July 7, 1998
Controls, Primary Safety

AUTOFLAME ENGINEERING LTD **MH25659 (N)**
BELLINGHAM TRADING ESTATE UNIT 19 FRANTHORNE WAY
BELLINGHAM LONDON, SE6 3BX ENGLAND UNITED KINGDOM
Mark 6 primary safety control with, Type MM60003/U or MM60004/U combustion detector.

LOOK FOR LISTING MARK ON PRODUCT

456637001 **Underwriters Laboratories Inc.®** K1I/0348251 58

For information on placing an order for UL Listing Cards in a 3 × 5 inch card format, please refer to the enclosed ordering information.

UNDERWRITERS LABORATORIES INC.

A not-for-profit organization dedicated to public safety and committed to quality service

ELIZABETH THE SECOND,

by the Grace of God of the United Kingdom of Great Britain and Northern Ireland and of Our other Realms and Territories Queen Defender of the Faith, to

Autoflame Engineering Ltd

Greeting!

We being cognisant of the outstanding achievement of the said body as manifested in the furtherance and increase of the Export Trade of Our United Kingdom of Great Britain and Northern Ireland, Our Channel Islands and Our Island of Man and being desirous of showing for a period of five years from the twenty-first day of April 1996 until the twentieth day of April 2001 and do hereby give permission for the authorised flag of the said Award to be flown during that time by the said body and for the device thereof to be displayed in the manner authorised by Our Warrant of the fifth day of May 1992.

And We do further hereby authorise the said body during the five years of the currency of this Our Award further to use and display in like manner the flags and devices of any current former Awards by it received as prescribed in the sixth Clause of Our said Warrant.

Given at Our Court at St. James's under Our Royal Sign Manual this twenty-first day of April in the year of Our Lord 1996 in the forty-fifth year of Our Reign.

By the Sovereign's Command.

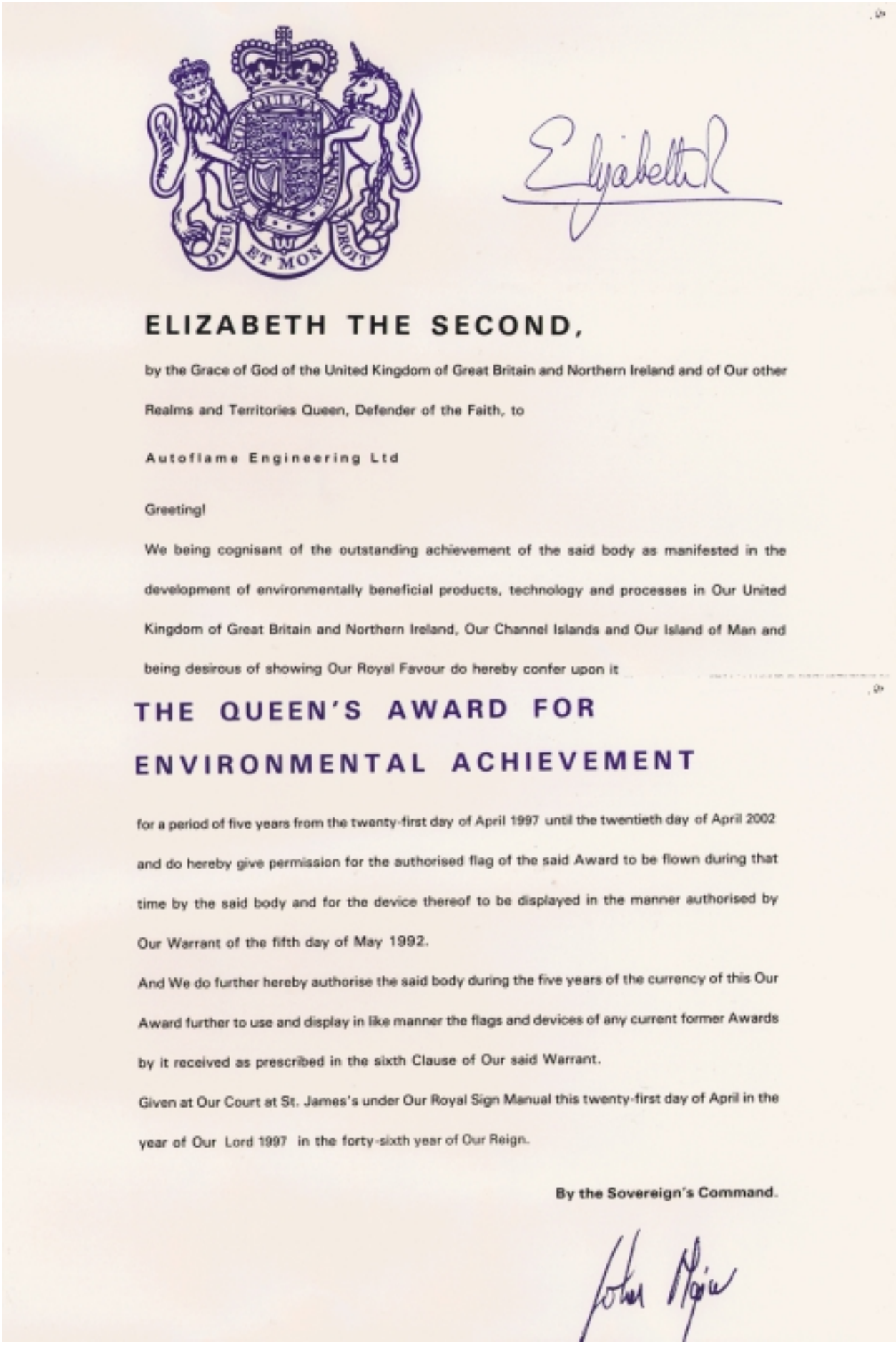

ELIZABETH THE SECOND,

by the Grace of God of the United Kingdom of Great Britain and Northern Ireland and of Our other Realms and Territories Queen, Defender of the Faith, to

Autoflame Engineering Ltd

Greeting!

We being cognisant of the outstanding achievement of the said body as manifested in the development of environmentally beneficial products, technology and processes in Our United Kingdom of Great Britain and Northern Ireland, Our Channel Islands and Our Island of Man and being desirous of showing Our Royal Favour do hereby confer upon it

THE QUEEN'S AWARD FOR ENVIRONMENTAL ACHIEVEMENT

for a period of five years from the twenty-first day of April 1997 until the twentieth day of April 2002 and do hereby give permission for the authorised flag of the said Award to be flown during that time by the said body and for the device thereof to be displayed in the manner authorised by Our Warrant of the fifth day of May 1992.

And We do further hereby authorise the said body during the five years of the currency of this Our Award further to use and display in like manner the flags and devices of any current former Awards by it received as prescribed in the sixth Clause of Our said Warrant.

Given at Our Court at St. James's under Our Royal Sign Manual this twenty-first day of April in the year of Our Lord 1997 in the forty-sixth year of Our Reign.

By the Sovereign's Command.

10.4.11 Additional Approvals

Approval No.:	Product:	Applicable Type Approval Authority:
MH25659	Mk6 Burner Management System	UL, CUL, UR
0063AT5181	Mk6 Burner Management System	CE
TU 12/94 0167	Mk5. M.M./E.G.A. System	T.U.V. Bayern e.v.
TU 12/96 171	Mini M.M./E.G.A. System	T.U.V. Bayern e.v.

10.5 CONVERSION DATA

10.5.1 Calorific Fuel Data

Stats	Kerosene SG	Gas Oil CI/SH	Light fuel Oil SG	Medium fuel Oil SG	Heavy Fuel Oil SG
Relative density 15.6°C (60°F) approx. / = litres x = kg	0.79	0.835	0.93	0.94	0.96
Flash point (closed) min °C (°F)	37.8 (100)	65.6 (150)	65.6 (150)	65.6 (150)	65.6 (150)
Viscosity kinematic (cSt) at 15.6°C (60°F) approx. 37.8°C (100°F) approx. 82.2°C (180°F) approx.	- 2.0 - -	- - 3.0	- - - 12.5	- - - 30	- - - 70
Equivalent Redwood No.1 Viscosity at 37.8°C (100°F)	-	33 approx	250 max	1000 max	3500 max
Freezing point °C / °F	Below -40	Below -40	Below -40	Below -40	Below -40
Cloud point °C max	-	-2.2	-	-	-
Gross calorific values KJ/kg approx. Btu/ib approx. KWh/litre approx. Therms/gallon approx. kW/kg	 46,520 20,000 10.18 1.58 -	 45,590 19,600 10.57 1.64 12.66	 43,496 18,700 11.28 1.75 12.08	 43,030 18,500 11.22 1.74 -	 42,800 18,400 11.42 1.77 11.89
Sulphur content % wt.	0.2	0.6	2.3	2.4	2.5
Water content % vol.	Negligible	0.05	0.1	0.20	0.30
Sediment content % wt	-	Negligible	0.2	0.03	0.04
Ash content % wt	-	Negligible	0.02	0.03	0.04
Mean specific heat between 0°C - 100°C approx.	0.50	0.49	0.46	0.45	0.45
Volume correction factor per 1°C	0.00083	0.00083	0.00070	0.00070	0.00068
Volume correction factor per 1°F	0.00046	0.00046	0.00039	0.00039	0.00038
Btu/U.S. gallon (US standard)	-	140,000	-	150,000	160,000
Lb/U.S. gallon (US standard)	-	7.01	-	-	7.01
% lighter than water		20%			4%
1 u.s. Gallon of oil / ft of air		1402			

Conversion Factor for Imperial Gas Flow Meters

Required Data: Pressure of gas at meter in "wg
Required gas flow in ftĆ/min

Calculations: Correction factor = (pressure of gas at meter x 0.00228) + 0.948
Reading on gas meter = Required gas flow / correction factor

Example: Pressure of gas at meter = 58" wg
Required gas flow = 95 ftĆ/min
Conversion factor = (58 x 0.00228) + 0.948 = 1.08
Reading on Meter = 95 / 1.08 = 88 ftĆ/min

Correction Factor for burners significantly above sea level. I.e. >200m (1 ft = 0.3048m)

Height above sea level in meters, Calculation for correction factor: =

(Pressure of gas at meter x 0.00228) + (0.948 – (height above sea level x 0.0001075))

Example: As above but 250 m above sea level:

- Correction factor = (58x0.00228) + (0.948 – (250 x 0.0001075)) = 1.05

10.5.2 Gas Volume Conversion Factors - Measured conditions to standard reference

Assumed gas temperature	10 °C	50 °F
Standard pressure	760 mmHg	101.3612 Kpa
Standard temperature	15.56 °C	
Ambient pressure	101.325 Kpa	

"Wg	PSI	mmH_2O	mmHg	Kpa	Millibar	Conversion factor
1	0.036	25.4	1.867	0.249	2.490	1.0218
2	0.072	50.8	3.734	0.498	4.980	1.0243
3	0.108	76.2	5.601	0.747	7.470	1.0268
4	0.144	101.6	7.468	0.996	9.960	1.0293
5	0.181	127.0	9.335	1.245	12.451	1.0318
6	0.217	152.4	11.202	1.494	14.941	1.0343
7	0.253	177.8	13.069	1.743	17.431	1.0368
8	0.289	203.2	14.936	1.993	19.921	1.0393
9	0.325	228.6	16.804	2.242	22.411	1.0418
10	0.361	254.0	18.671	2.491	24.901	1.0443
15	0.542	381.0	28.006	3.736	37.352	1.0569
20	0.722	508.0	37.341	4.981	49.802	1.0694
25	0.903	635.0	46.677	6.227	62.253	1.0819
30	1.083	762.0	56.012	7.472	74.703	1.0944
35	1.264	889.0	65.347	8.717	87.154	1.1070
40	1.444	1016.0	74.682	9.963	99.604	1.1195
45	1.625	1143.0	84.018	11.208	112.055	1.1320
50	1.805	1270.0	93.353	12.453	124.505	1.1445
55	1.986	1397.0	102.688	13.699	136.956	1.1571
60	2.166	1524.0	112.024	14.944	149.406	1.1696
65	2.347	1651.0	121.359	16.189	161.857	1.1821
70	2.527	1778.0	130.694	17.435	174.307	1.1947
75	2.708	1905.0	140.030	18.680	186.758	1.2072
80	2.889	2032.0	149.365	19.925	199.208	1.2197
85	3.069	2159.0	158.700	21.171	211.659	1.2322
90	3.250	2286.0	168.035	22.416	224.109	1.2448
95	3.430	2413.0	177.371	23.661	236.560	1.2573
100	3.611	2540.0	186.706	24.907	249.010	1.2698
110	3.972	2794.0	205.377	27.397	273.911	1.2949
120	4.333	3048.0	224.047	29.888	298.812	1.3199
130	4.694	3302.0	242.718	32.379	323.713	1.3450
140	5.055	3556.0	261.388	34.869	348.614	1.3700
150	5.416	3810.0	280.059	37.360	373.515	1.3951
160	5.777	4064.0	298.730	39.851	398.416	1.4201
170	6.138	4318.0	317.400	42.341	423.317	1.4452
180	6.499	4572.0	336.071	44.832	448.218	1.4703
190	6.860	4826.0	354.741	47.323	473.119	1.4953
200	7.221	5080.0	373.412	49.813	498.020	1.5204

How to use this information:-

1. Measure Volumetric flow of gas for 1min in ft3 (i.e. ft3/min). Note 1m3 = 35.31ft3
2. Multiply this volume flow by 60 to give volumetric flow per hour (i.e. ft3/hr).
3. Measure the pressure of the gas supply.
4. Use the table above to obtain a conversion factor.
5. Multiply the volume flow per hour by the conversion factor to obtain a volume at reference conditions.
6. For natural gas, the calorific value is typically 1000 Btu/ft3. To obtain the firing rate of the boiler at standard reference conditions multiply the volume at reference conditions by 1000.

Represented as an equation:-

Firing rate = (Measured Volumetric flow per minute * 60 * Conversion factor * 1000) Btu/hr